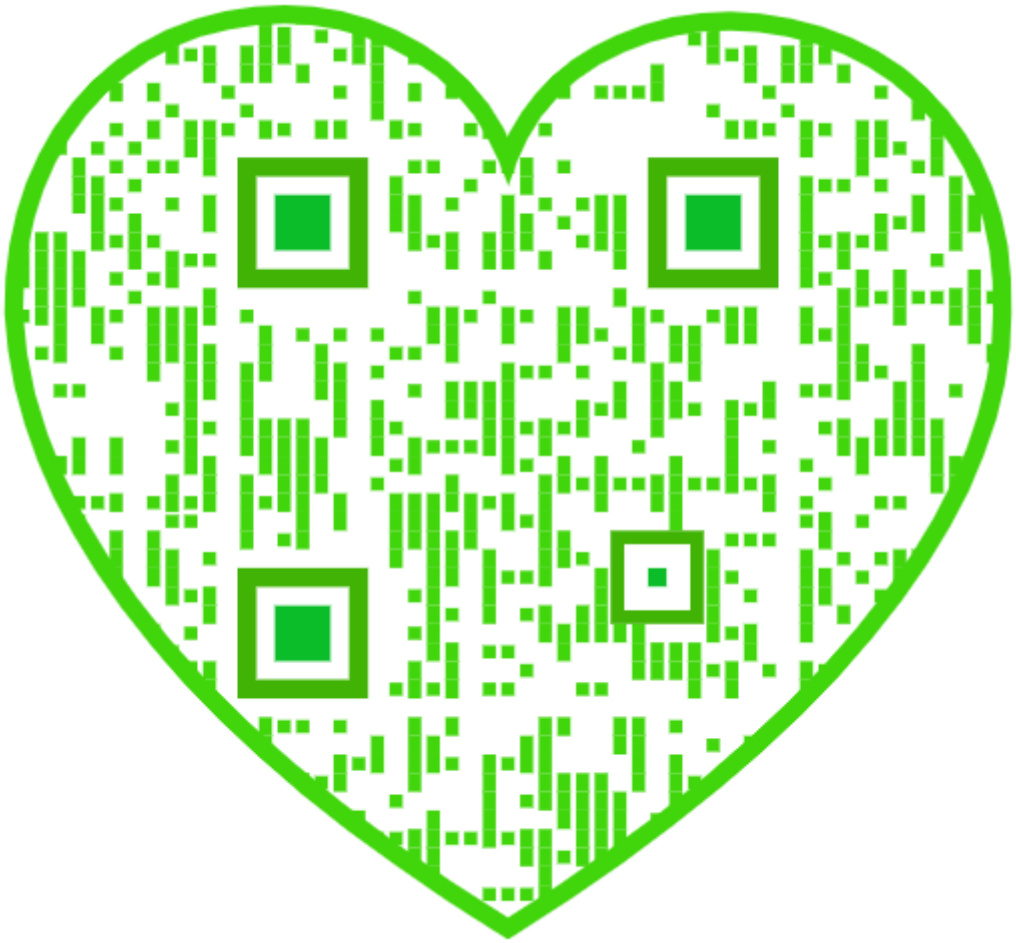

ORE DRESSING.

Published by the
McGraw-Hill Book Company
New York

Successors to the Book Departments of the
McGraw Publishing Company Hill Publishing Company

Publishers of Books for
Electrical World The Engineering and Mining Journal
The Engineering Record Power and The Engineer
Electric Railway Journal American Machinist

Ore Dressing

By

ROBERT H. RICHARDS, S.B., LL.D.

Professor of Mining Engineering and Metallurgy at the Massachusetts Institute of Technology, Boston, Mass., U. S. A.

IN FOUR VOLUMES

VOL. III

FIRST EDITION

SECOND IMPRESSION

1909

McGRAW-HILL BOOK COMPANY

239 WEST 39TH STREET, NEW YORK

6 BOUVERIE STREET, LONDON, E.C.

THE NEW YORK
PUBLIC LIBRARY
552661
ASTOR, LENOX AND
TILDEN FOUNDATIONS.
R 1912 L

COPYRIGHT, 1909
BY THE
McGRAW-HILL BOOK COMPANY

The Plimpton Press Norwood Mass. U.S.A.

PREFACE FOR VOLUMES III. AND IV.

ORE DRESSING appeared as a two-volume book in 1903. Since that time advances in the art of concentrating ores have been exceedingly rapid and in some instances well-nigh revolutionary. Investigations have been made for the purpose of explaining the principles of ore separation, new concentrating devices have been invented and installed in the mills, and the mills themselves have been greatly improved. For these reasons the time seems to have come to bring the subject up to date. When this present work was started in October, 1906, it was thought that something in the nature of a small supplement or appendix would suffice and on this basis the collection of material was undertaken. It soon became apparent that the new work would rank in size with Volumes I and II and hence naturally receive the titles of Volumes III and IV. The idea of revising and rewriting Volumes I and II seemed to be prohibited by reason of the fact that the machines and the mills are so completely interwoven on almost every page that no method of revision appeared adequate to the task.

The new work has therefore taken the form of Volumes III and IV in which the subject-matter of Volumes I and II is added to chapter by chapter. In selecting machines for description the effort has been made to take only those machines that have found practical application. The four volumes have been indexed together and the complete index is inserted in each volume. Another feature of the book that will be noted is the insertion of the mill numbers in a prominent place at the top of the pages in Chapter XLI. It is hoped that both of these changes will add to the convenience and usefulness of the book.

In Chapter XLI there will be found described ninety-four mills representing milling practice in the principal mining centers of the world. Many of these mills are given in great detail and contain figures as to costs, power, water, etc., that should be of the utmost value. Care has been taken in indexing to make this information available. Throughout this chapter tonnages are given in tons of 2,000 pounds unless otherwise stated.

The writer wishes to acknowledge the help that he has received from the manufacturers of milling machinery and from the owners, managers, and superintendents of mills. This help has been given in the most cordial and sympathetic way on all sides. He desires especially to thank Mr. J. R. Finlay for the article on costs which appears in Chapter XLII. For a fuller discussion of this very interesting subject the writer takes great pleasure in recommending Mr. Finlay's book entitled "The Cost of Mining" which he understands

is soon to appear. He desires to thank Mr. Charles Loughridge for his help with the manuscript of the Wilfley table, and Mr. Henry A. Wentworth for the material contributed with reference to electrostatic separation. Credit has been given in the bibliography of the various chapters for all material taken from other sources.

The writer feels especially indebted to Mr. E. S. Bardwell and Mr. E. G. Goodwin for their careful and intelligent work on the book, also to Prof. H. O. Hofman for his criticism of the manuscript, and to Prof. Charles E Locke who has assisted greatly both in criticizing the manuscript and has also reindexed Volumes I and II.

TABLE OF CONTENTS.

PAGES.

PREFACE iii
TABLE OF CONTENTS v
LIST OF ILLUSTRATIONS xi
LIST OF BOOKS AND PERIODICALS xix
TABLE 410. — KEY TO MILL NUMBERS xxi

CHAPTER XXII.

GENERAL PRINCIPLES 1199

Physical properties of minerals, 1199.

CHAPTER XXIII.

PRELIMINARY CRUSHING 1200–1223

Rock breakers of the Blake type, 1200. Farrel-Blake breaker, 1200. Carterville breaker, 1201. Krupp breaker, 1202. Samson breaker, 1202. National Drill and Manufacturing Company breaker, 1203. Denver Engineering Works breaker, 1203. New Century breaker, 1203. Sturtevant, 1205. Humboldt, 1205. Dodge-type breakers, 1205. Sturtevant, 1205. Humboldt, 1206. Spindle or gyrating breakers, 1206. Gates breaker, 1207. Austin, 1210. McCully, 1210. Kennedy, 1213. Krupp, 1215. Hathaway, 1215. Range of adjustment of gyratory breakers, 1218. Size of crushed product, 1218. Materials for wearing parts, 1221. Costs, 1222. Bibliography, 1222.

CHAPTER XXIV.

ROLLS 1224–1245

Principle of roll crushing, 1224. Rolls for dry crushing, 1224. Speed of rolls, 1224. Angle of nip, 1226. Capacity of rolls, 1226. Features and faults of rolls, 1229. Argall rolls, 1230. Superior crushing rolls, 1231. McFarlane rolls, 1232. Sturtevant balanced rolls, 1232. Humphrey rolls, 1234. Rigid rolls, 1235. Sturtevant centrifugal rolls, 1237. Krupp rolls, 1238. Triplex rolls, 1239. Humboldt rolls, 1241. Single-roll crusher, 1241. Corrugated rolls and rolls with inserted teeth, 1242. Sturtevant roll-shell turning device, 1243. Truing roll shells with emery wheel, 1243. Materials for wearing parts, 1243. Life of wearing parts, 1244. Bibliography, 1244.

CHAPTER XXV.

STEAM, PNEUMATIC, AND SPRING STAMPS 1246–1261

Principle, purpose, and classification of stamps, 1246 Steam stamps, principles of action, 1246. Foundations, anvil blocks, mortar beds, sills, and girders, 1247. Pistons, piston rod, dash pot, flange, revolving pulley, stamp stem, stamp shoe, 1247. Steam cylinder, valves, and valve gears, 1249. Single-cylinder stamps, 1249. Cross-compound stamps, 1250. Tandem or steeple-compound stamps, 1250. Comparative performance of single and compound-cylinder Nordberg stamps, 1254. Discharges for steam stamps, 1256. Pneumatic stamps, 1257. Hydraulic stamps, 1257. Lever stamps, 1261. Bibliography, 1261.

CHAPTER XXVI.

GRAVITY STAMPS 1262–1278

Principle of action, 1262. Mortars, 1263. The Nissen stamp, 1263. Merrall's individual mortar, 1264. M. P. Boss individual mortar, 1265. Rapid economy individual mortar, 1266. Traylor double-discharge mortar, 1266. Schorr stay-overflow five-stamp battery mortar, 1266. Standard ten-stamp battery, 1266. Sectional mortars, 1266. Guide blocks, 1266.

PAGES.

Screen openings, 1270. Boss stamp head, 1271. Frames, 1272. Boss wedge-grip tappet, 1272. Proportions between weights of stamp parts, 1272. Cam shafts, 1272. Cams, 1272. Boss cam key, 1273. Canda cams, 1273. Lever-operated latch finger, 1273. Power for stamps, 1274. Order of drop, 1274. Economic range of stamps, 1276. Life of shoes and dies, 1277. Materials for wearing parts, 1277. Bibliography, 1278.

CHAPTER XXVII.

PULVERIZERS OTHER THAN GRAVITY STAMPS 1279–1324

Purpose, 1279. Classification, 1279. Continuous grinding pans, 1282. Colorado Iron Works pan, 1282. Details from Australian practice, 1283. Braun sample grinder, 1284. Sturtevant sample grinder, 1284. Nevada sample grinder, 1284. Stanwood gravity muller, 1285. McKenna laboratory ore grinder, 1285. Tube and ball mills, 1285. Foundations for tube mills, 1286. Liners, 1286. Feed opening, 1287. Discharge opening, 1287. Pebbles, 1288. Feeding tube mills, 1288. Direction of rotation, 1289. Speed of rotation, 1289. Horse-power, 1289. Management of tube mills, 1290. Quality of work done by the tube mills, 1290. Capacity of tube mills, 1291. Consumption of pebbles and liners, 1291. Cost of tube milling, 1291. Efficiency of tube mills, 1292. General tube mill notes, 1294. Alsing tube mill, 1294. Denver Engineering Works tube mill, 1296. Hardinge conical tube mill, 1296. Gates tube mill, 1296. Davidsen tube mill, 1297. Abbé tube mill, 1298. Ferraris ball mill, 1299. Gates ball mill, 1300. Humboldt ball mill, 1301. Wear of steel balls, 1303. Roller mills, 1303. Kent mill, 1303. Wild mill, 1304. Edge runners, 1305. Garfield Chili mill, 1305. Akron Chili mill, 1307. Lane slow-speed mill, 1308. Bryan mills versus high-speed rolls, 1309. Muller grinding mills, 1310. Little Giant quartz mill, 1310. Hathaway gyratory mill, 1310. Improved Huntington mill, 1311. M. P. Boss roller mill, 1313. Sherman centrifugal roller mill, 1313. New Improved Huntington mill, 1313. Huntington mills in general, 1313. Foundations, 1313. Feeding the mill, 1314. Screens for Huntington mills, 1314. Quality of work done by Huntington mills, 1317. Life of wearing parts, 1317. Cost of crushing by Huntington mills, 1318. Disintegrators and pulverizers, 1319. The Stroud mill, 1319. Jeffrey swing-hammer pulverizer, 1321. Williams hinged-hammer pulverizer, 1322. Bibliography, 1323.

CHAPTER XXVIII.

LAWS OF CRUSHING 1325–1340

Nature of material crushed, 1325. Fineness of desired product, 1325. Sources of lost power, 1325. Conditions under which crushing is effected, 1326. Comparison of the various types of crushing machines, 1331. Relative efficiency of regrinding machines, 1331. Power required for crushing, 1334. Theory of tube mill action, 1336. White's experiments, 1336. Bibliography, 1340

CHAPTER XXIX.

PRELIMINARY WASHERS 1341–1344

Washers using rotating stirrers, 1341. Wash trommels, 1341. The Turbo log washer, 1341. Dorr mechanical classifier, 1343. Bibliography, 1344.

CHAPTER XXX.

SIZING SCREENS 1345–1360

Stationary screens, 1345. Rowand inclined screen, 1345. Pratt ore sizer, 1345. Riddles and vibrating grizzlies, 1346. Ferraris shaking screens, 1347. Pulsating screens, 1348. Imperial screen, 1348. Newago separator, 1350. Impact screen, 1351. Vibracone separator, 1352. Traylor centripact screen, 1352. Revolving screens, 1353. Octagonal revolving screens, 1353. Sectional trommels, 1353. Submerged trommel, 1355. The King screen, 1356. Belt screens, 1357. Dunlap Perfect clay screen, 1357. Callow traveling-belt screen, 1358. Bibliography, 1360.

CHAPTER XXXI.

PRINCIPLES OF SCREEN SIZING 1361–1366

Sieve scale, 1361. Limit of screen sizing, 1361. Standardization of

PAGES.

screens, 1361. Measurement of screen openings, 1362. Wire Cloth Manufacturers' Association Standards, 1364. Tyler double-crimped mining wire cloth, 1364. Galvanized and tinned wire cloth, 1365. Mill screens, 1365. Wear of screening surfaces, 1365. Bibliography, 1366.

CHAPTER XXXII.

CLASSIFIERS 1356–1420

History of hydraulic classifiers, 1367. Purposes of classifiers, 1367. Principles of action, 1368. Limitations of hydraulic classifiers, 1368. Difficulties attending classification, 1368. Means of overcoming adverse tendencies, 1369. Classification, 1370. Deep-pocket free-settling classifiers, 1371. The Merrill small cones, 1371. Burgan classifier, 1371. Swain hydraulic classifier, 1371. New Standard hydraulic classifier, 1373. Richards' pocket-vortex classifier, 1373. Single-spigot vortex classifier, 1377. Tank vortex classifier, 1378. Tubular free-settling classifiers, 1381. Double-cone hydraulic classifiers, 1381. Spitzlutten, 1382. Richards' annular vortex classifier, 1382. Shallow-pocket hindered-settling classifiers, 1384. Richards' shallow-pocket hindered-settling classifier, 1384. Richards' undercurrent, 1386. Deep-pocket hindered-settling classifiers, 1387. Richards' pulsator classifier, 1388. Tests on Richards' pulsator, 1391. Pulp thickeners, 1394. Definition of slimes, 1394. Surface-current box classifiers, 1401. Richards-Shepard spitzkasten, 1401. DeKalb classifiers, 1402. Whole-current box classifiers, 1402. Ascending-current cones or cylinders, 1402. The Callow cone, 1402. Sherman system, 1402. Merrill large cone, 1406. Merrill cylindrical clarifying tanks, 1406. Colorado Iron Works Company slime tanks, 1407. Beringer and Stingls slime tank, 1407. Ayton intermittent thick pulp extractor, 1408. Clarifying tanks, 1409. Binkley system, 1409. Slime treatment on the Rand, 1410. Slime treatment in Arizona, 1411. Use of chemicals for slime settling, 1413. Precipitating agents, 1416. Distributing devices, 1417. Distributing or sizing launder, 1417. Mechanical divider or distributor, 1418. Bibliography, 1418.

CHAPTER XXXIII.

LAWS OF CLASSIFYING BY SETTLING IN WATER 1421–1434

Velocity of settling under free-settling conditions, 1421. Free-settling ratios, 1426. Theoretical value for hindered-settling ratios, 1427. Hindered-settling tests, 1428. Full-teeter velocities of quartz and galena, 1430. Application to classifier design, 1432. Extent of classification, 1433. Bibliography, 1433.

CHAPTER XXXIV.

HAND PICKING 1435-1439

Breaking, 1435. Picking tables or belts, 1435. Speed and capacity, 1438. Costs, 1438. Cobbing devices, 1439. Bibliography, 1439.

CHAPTER XXXV.

JIGS 1440–1459

Movable-sieve jigs, 1440. The Hancock jig, 1440. Fixed-sieve jigs, 1444. The New Century jigs, 1444. Krupp jigs, 1446. Classifier jigs, 1447. Woodbury jig, 1447. Richards' pulsator jig, 1453. Differential-motion variable-crank mechanism, 1457. Jig discharges, 1458. Jig beds, 1458. Bibliography, 1459.

CHAPTER XXXVI.

LAWS OF JIGGING 1460–1463

Hindered settling, 1460. Pulsion and suction, 1460. Pulsion, general principles, 1460. Pulsion velocity, 1460. Suction, general principles, 1461. Bring's test, 1461. Effect of jig bed, 1463. Sizing before jigging, 1463. Bibliography, 1463.

CHAPTER XXXVII.

FINE SAND AND SLIME CONCENTRATORS 1464–1511

Classification, 1464. Wilfley table, 1465. Investigation of Wilfley table work, 1469. Sized versus classified feeds for the Wilfley table, 1478. Wilfley table as a slimer, 1478. New Standard concentrator, 1478. Overstrom table, 1479. Sutton, Steele & Steele dry table, 1479. Pinder concentrator, 1479. Dodd buddle, 1481. Card concentrator, 1481. Christen-

PAGES.

sen concentrator, 1484. Overstrom table, 1485. Bartlett simplex concentrator, 1487. Deister tables, 1488. Ferraris patent table, 1490. James concentrator, 1490. James slimer, 1491. Luhrig-Buss concentrator, 1492. The McLeod concentrator, 1492. New Humboldt concentrator, 1493. Woodbury table, 1494. Belt percussion table, 1496. Luhrig slimer, 1496. Bartsch rotary percussion table, 1497. End bumping tables, 1497. General comments on rectilinear tables, 1498. Vanners, 1498. Frue vanner, 1499. Horn rotary slime concentrator, 1499. Akens and Evans slimer, 1500. Johnston vanners, 1501. Suspended frame vanner, 1503. Spadone concentrator belt, 1503. Crack-proof vanner belt, 1503. Shackleford's patent box-cleaning device, 1503. Slimers, 1504. Sherman slimer, 1506. Film sizing tables, 1506. Continuous-surface round tables, 1506. Rag frames, 1507. Dimmick patent slime table, 1507. Caribou riffle, 1509. La Point suspended riffle cleats, 1509. Kieves, 1510. Depth of bed, 1510. Bibliography, 1511.

CHAPTER XXXVIII.

AMALGAMATION 1512–1520

The amalgams, 1512. Amalgamation, 1512. Amalgamating plates, 1512. Preparation of pulp previous to amalgamation, 1514. Material for plates, 1514. Absorption by plates, 1514. Effect of temperature on amalgamation, 1516. Mercury traps, 1516. Amalgamators, 1517. Pan amalgamation, 1517. Squeezing amalgam, 1517. Sealing retorts, 1519. Bibliography, 1520.

CHAPTER XXXIX.

MISCELLANEOUS PROCESSES OF SEPARATION 1521–1569

Magnetic concentration, 1521. Principles, 1521. Magnetic separators of the primary-magnet type, 1521. Wetherill separator, 1521. Ferraris separator, 1525. Ball-Norton, 1527. Leighton, 1528. Ferraris drum-type separator, 1528. Eriksson's electromagnetic separator, 1529. Humboldt separators, 1530. Cranberry magnet, 1530. Cobbing magnets, 1531. Separators of the secondary or induced-magnet type, 1533. International, 1533. Ulrich, 1535. Mechernich, 1535. Gröndal, 1537. Forsgren, 1538. Dings, 1540. Knowles New Century, 1541. Cleveland-Knowles, 1542. Roasting for magnetism, 1543. Effect of carbon, 1544. Calcining, 1544. Experiments, 1544. Furnaces, 1545. Electrostatic separators, 1549. Blake-Morscher electrical ore separator, 1550. Huff electrostatic separator, 1551. Pneumatic separators, 1553. Freid gravity dry-process separator, 1553. Sutton, Steele, and Steele dry table, 1554. Flotation processes, 1555. Theory of flotation processes, 1555. Elmore vacuum process, 1556. Flotation process of the Minerals Separation Company, Limited, 1560. Potter and Delprat processes, 1561. DeBavay process, 1562. Macquisten's flotation process, 1563. Separation by decrepitation and screening, 1565. Separation by crushing and screening, 1566. Molybdenite dressing, 1567. Bibliography, 1568.

CHAPTER XL.

ACCESSORY APPARATUS 1570–1610

Concentrate drying bins, 1570. Filter bins, 1570. Samplers, 1570. Hand sampling, 1570. Mechanical samplers, 1571. Lamb automatic tailings sampler, 1573. Principles of sampling, 1574. Feeders, 1578. Challenge feeder, 1578. Perfection ore feeder, 1578. Colorado Iron Works Company feeder, 1580. Push feeders, 1581. Conveyors, 1582. Classification, 1582. Push or drag conveyors, 1582. Screw conveyors, 1582. Drag or disc conveyors, 1583. Push conveyors, 1584. Carrying conveyors, 1585. Sand wheels, 1586. Sand pumps, 1587. Traylor centrifugal pumps, 1588. Lancaster rotary pumps, 1589. Displacement pumps, 1589. Dewatering wheels, 1590. Fleming dewatering wheel, 1590. Rogers dewatering screen, 1591. Launders, 1592. Driers, 1595. Drying floors, 1596. Cylindrical driers, 1596. Cyanide machinery, 1600. Weighing devices, 1603. Blake-Denison weigher, 1603. Libra scales, 1605. Friction clutches, 1606. Removal of wood, 1607. Hoists, 1608. Bibliography, 1609.

CHAPTER XLI.

SUMMARY OF PRINCIPLES AND OUTLINES OF MILLS 1611–1926

Summary of principles, 1611. Combinations of principles of separation,

PAGES.

1611. Schemes of mill treatment, 1613. Methods of study, 1613. Order of mills, 1616. Washing followed by hand picking and sizing, 1616. Amalgamation followed by concentration and lixiviation of concentrates and tailings, 1617. Amalgamation followed by concentration and lixiviation of concentrates, 1620. Amalgamation followed by concentration and lixiviation of tailings, 1623. Amalgamation followed by lixiviation and concentration, 1631. Amalgamation followed by lixiviation, 1634. Amalgamation followed by concentration, 1652. Concentration followed by lixiviation, 1665. Lixiviation, 1676. Mills saving only silver values, 1679. Mills saving silver and lead values, 1680. Mills saving only lead values, 1706. Mills saving silver, lead, and zinc values, 1713. Mills saving gold, silver, lead, and zinc values, 1748. Mills saving gold, silver, lead, and copper values, 1768. Mills saving lead and zinc values, 1780. Mills saving lead, zinc, and iron values, 1783. Mills saving lead, zinc, and copper values, 1794. Mills saving zinc and manganese values, 1804. Mills saving iron and manganese values, 1814. Mills saving only iron values, 1815. Mills saving iron and copper values, 1828. Mills saving gold and copper values, 1831. Mills saving gold, silver, and copper values, 1836. Mills saving copper and sulphur values, 1888. Mills saving only copper values, 1891. Mills saving only pyrite, 1913. Mills saving tin and tungsten values, 1915. Mills saving only asbestos, 1916. Mills saving only mercury values, 1919. Mills saving only diamonds, 1921. Bibliography, 1922.

CHAPTER XLII.

GENERAL IDEAS ON MILLING 1927–1997

Power, 1927. Power tests at Mill 173, 1927. Power required at Mill 162, 1930. Lubrication and care of journals, 1930. Lighting, 1931. Labor in the mills, 1931. Water consumption, 1931. Percentage of extraction, 1932. Schedules for calculating the value of zinc ores, 1932. Costs and extractions, 1939. Cost of erecting mills, 1939. General principles governing working costs, 1940. Cost of producing copper in Lake Superior district, 1948. Cost of producing copper in Montana, 1950. Cost of producing copper in Arizona, 1953. Cost of producing copper in Utah, 1955. Costs of Tennessee Copper Company, 1956. Costs of Granby Consolidated, 1957. Costs at Mount Lyell, Tasmania, 1957. Costs in various other districts, 1958. General considerations on costs of copper production, 1958. Cost of producing silver and lead in Cœur d'Alene, 1960. Cost of producing silver and lead at Broken Hill, 1964. Cost of producing silver and lead in Colorado, 1965. Cost of producing silver and lead in Utah, 1966. Cost of producing lead and zinc in Missouri, 1968. Generalizations on lead mining, 1974. Cost of producing gold in Cripple Creek, 1974. Cost of producing gold at Douglas Island, Alaska, 1975. Cost of producing gold in Grass Valley, California, 1977. Cost of producing gold in the Black Hills, 1977. Cost of producing gold in San Juan district, Colorado, 1978. Cost of producing gold at El Oro, Mexico, 1980. Cost of producing gold in Kolar district, India, 1981. Cost of producing gold in the Witwatersrand, South Africa, 1983. Cost of mining and milling iron ores in Eastern United States, 1986. Cost of mining and milling tungsten ores in Boulder County, Colorado, 1987. Testing, 1988. Screens, 1988. Bardwell sorting tube, 1988. Classifiers, 1989. Jigs for testing purposes, 1989. Wilfley table for testing, 1990. Testing for flotation, 1991. Testing by heavy solution, 1993. Magnetic separators, 1993. Roasting for magnetic separation, 1995. Bottle amalgamation, 1996. Measurement of mineral particles, 1996. Testing for a process, 1996. Regular mill testing, 1996. Bibliography, 1997.

APPENDIX.

TABLES AND OTHER USEFUL INFORMATION 1998–2007

Standard gauges for brass and iron wire,1998. Table of diameters and areas of circles, 2000. Table of quartz diameters and velocities, 2003. Per cent of voids in crushed limestone, 2006. Effect of distance hauled upon settlement in wagon, 2007. General Bibliography of Ore Dressing Literature, 2008.

BIBLIOGRAPHY 2009

LIST OF ILLUSTRATIONS.

FIGURES.		PAGES.
561.	Sectional View of Farrel "Style B" Breaker	1201
562.	Section of Samson Breaker	1202
563.	The Case Laboratory Breaker	1204
564.	Section Sturtevant Breaker	1205
565.	Sectional View of Style "K" Gates Rock and Ore Breaker	1206
566.	Head Suspension of Gates Gyratory Breaker	1207
567.	Gates Breaker Fitted with Short Head and Concaves	1209
568.	Sectional View of McCully Gyratory Breaker	1211
569.	Diagram of Capacities for McCully Breaker	1212
570.	Manganese-Steel Mantle for McCully Breaker	1213
571.	Sectional View of Kennedy Gyratory Breaker	1214
572.	The Krupp Gyratory Breaker	1215
573.	The C. L. Hathaway Gyratory Breaker	1216
574.	Sketch Showing Fallacy of Large Range of Adjustment for Gyratory Breakers,	1218
575.	Diagram Showing Size of Crushed Products	1219
576*a*.	Section of Cast-Iron Head Center	1221
576*b*.	Section of Mantle	1221
577*a*.	Gates Manganese-Steel Mantle Showing Method of Attachment	1221
577*b*.	Bottom View	1221
578.	Diagram Showing Proper Speed of Rolls and Maximum Size of Feed, dry Crushing	1225
579.	Diagram Showing Percentage Reduction and Corresponding Percentage of Finished Products	1227
580.	Diagram Giving Capacity of Finished Production in Cubic Feet per Hour at Given Speed and Sizes	1228
581*a*.	Plan of Argall Rolls	1230
581*b*.	Side Elevation of Argall Rolls	1231
582.	Superior Crushing Rolls	1232
583.	McFarlane Parallel Rolls	1233
584.	Sturtevant Balanced Rolls	1233
585*a*.	Side Elevation of Humphrey Crushing Rolls	1234
585*b*.	Cross-section of Humphrey Crushing Rolls	1234
586*a*.	Denver Engineering Works Company's Rigid Rolls	1236
586*b*.	Cross-section of Rigid Rolls	1236
587.	Cross-section of Sturtevant Centrifugal Rolls	1238
588.	Side Elevation Fried. Krupp High Speed Rolls	1238
589.	Triplex Rolls	1240
590.	McLanahan's Single-Roll Crusher	1241
591.	Allis-Chalmers Toothed Rolls, Housing Removed	1242
592.	Sturtevant Roll Shell Turning Device	1243
593.	Anvil Block of Nordberg Steam Stamp	1247
594*a*.	Plan of Mortar, Nordberg Steam Stamp	1248
594*b*.	Mortar of Nordberg Steam Stamp	1248
595*a*.	Nordberg Steam Stamp	1249
595*b*.	Side Elevation	1249
596*a*.	Indicator Diagram Top Steam Nordberg 20 by 24-Inch Stamp	1250
596*b*.	Bottom Steam. Nordberg Stamp	1251
596*c*.	Velocity Diagram	1251
597*a*.	Nordberg Steeple-Compound Stamp	1252
597*b*.	Nordberg Steeple-Compound Stamp	1253
598*a*.	High-Pressure Blow Card	1255
598*b*.	High-Pressure Lift Card	1255
598*c*.	Low-Pressure Blow Card	1255
599*a*.	Detail Section of Cylinder. Denny Hydraulic Stamp	1257

FIGURES.		PAGES.
599*b*.	Cross-section. Denny Hydraulic Stamp	1258
599*c*.	Elevation Denny Hydraulic Stamp	1259
599*d*.	Guide Block of Denny Stamp	1260
600.	Rapid Economy Stamp, Operating Mechanism	1261
601*a*.	Nissen Type AA Mortar	1263
601*b*.	Accessories	1263
602*a*.	Nissen Type B Mortar	1264
602*b*.	Chuck Block and Screen Bands	1264
603.	M. P. Boss Individual Mortar	1265
604.	Traylor Double-Discharge Mortar	1266
605*a*.	Schorr Stay Overflow Mortar	1266
605*b*.	Double-Discharge Schorr Mortar	1266
606.	Boss Standard Mortar	1267
607*a*.	Modern Ten-Stamp Battery	1268
607*b*.	Modern Homestake-Type Mortar	1269
608.	Traylor Sectional Mortar	1269
609*a*.	Elevation of Denny Sectional Guide Blocks	1269
609*b*.	Plan	1269
609*c*.	End Elevation	1269
609*d*.	Section	1269
610.	Wellman-Seaver-Morgan Sectional Stamp-Guides	1270
611.	Fried. Krupp Guide Blocks	1270
612.	Foote Battery Screen	1270
613.	Pachuca Stamp-Battery	1271
614.	Boss Wedge-Grip Tappet	1272
615*a*.	Krupp Cam Shaft	1273
615*b*.	Cam and Key	1273
616.	Boss Cam Key	1273
617.	Canda Cam	1273
618.	Boss Lever-Operated Latch Finger	1274
619.	Power Diagram for Stamp Mills	1275
620*a*.	Cams and Cam Shaft for Ten-Stamp Battery	1276
620*b*.	End View	1276
621*a*.	Cross-section of Continuous Grinding Pan	1283
621*b*.	Plan	1283
622.	The Stanwood Gravity Muller	1285
623.	McKenna Laboratory Ore Grinder	1285
624.	El Oro Tube Mill Lining	1287
625.	Scoop Feed for Tube Mill	1287
626*a*.	J. R. Alsing Tube Mill, Side Elevation	1295
626*b*.	End View	1295
627.	Hardinge Conical Tube Mill. Section	1297
628.	Section of Davidsen Tube Mill	1298
629*a*.	Model Showing Spiral Feed of Abbé Tube Mill	1298
629*b*.	Spiral End Discharge	1298
630*a*.	Ferraris Ball Mill	1299
630*b*.	Section	1299
631.	Section of Gates Ball Mill	1301
632*a*.	Cross-section of Humboldt Ball Mill	1302
632*b*.	Longitudinal Section	1302
633.	Cross-section of Kent Mill	1303
634.	The Wild Mill	1304
635.	The Garfield Chili Mill	1306
636.	Mortar Hub of Akron Chili Mill	1307
637.	The Lane Slow-Speed Mill	1308
638.	Essential Features of Merrill's Mill	1310
639.	The Hathaway Gyratory Mill	1311
640*a*.	Improved Huntington Mill	1312
640*b*.	Plan	1312
641.	Rolled Slot Screen Before and After Using	1315
642.	Punched Slot Screen Before and After Using	1316
643*a*.	Sectional Side View of Stroud Disintegrator	1319
643*b*.	Sectional End View	1319
644*a*.	Jeffrey Swing Hammer Pulverizer. Housing Removed	1321
644*b*.	Jeffrey Swing Hammer Crusher	1322
645*a*.	Diametral Crushing	1327

FIGURES.		PAGES.
645*b*.	Radial Crushing	1327
645*c*.	Shearing	1327
646.	Graphical Representation of Tables 466, 467, and 468	1327
647.	Crushing Effect of Rolls	1330
648.	Diagrammatic Representation of Tube Mill Action	1336
649.	Paths of Motion in Tube Mill	1337
650.	Interior of Tube Mill. Outer Layer of Balls Continuous	1339
651*a*.	Longitudinal Section of Krupp Wash Trommel	1342
651*b*.	End View	1342
652.	The Turbo Log Washer	1343
653.	Dorr Mechanical Washer or Classifier	1343
654.	Longitudinal Section of Rowand Screen	1346
655.	Section of Pratt Ore Sizer	1347
656.	Ferraris Shaking Screen	1348
657*a*.	Shaking Riddle	1348
657*b*.	Shaking Riddle, Ferraris Principle Applied	1348
658*a*, *b*, *c*, *d*.	Mechanism of the Imperial Screen	1349
658*e*.	The Imperial Ore Screen	1349
659.	The Newago Separator	1350
660.	The Impact Screen	1352
661.	Section of the Vibracone Separator	1352
662.	Sketch Showing Principle of Centripact Screen	1353
663.	Octagonal Revolving Screen	1354
664.	Denver Engineering Works Revolving Grizzly	1354
665.	Gates Revolving Screen	1355
666*a*.	End View of Submerged Trommel	1355
666*b*.	Longitudinal Section	1355
667.	The King Screen	1356
668.	The Dunlap Perfect Clay Screen	1357
669*a*.	Side Elevation of Callow Duplex Screen	1358
669*b*.	Plan	1359
670.	Snyder Micrometer Caliper	1363
671.	Sorting Column of Evans Classifier	1369
672.	Diagram Showing Helical Currents	1369
673.	Helical Currents Unwrapped	1370
674*a*.	Side Elevation of Burgan Classifier	1372
674*b*.	Plan	1372
674*c*.	End Elevation	1372
675.	Sorting Column of Swain Hydraulic Classifier	1372
676.	Swain Hydraulic Classifier	1373
677.	New Standard Hydraulic Classifier	1373
678*a*.	Plan of Richards' Hydraulic Classifier	1374
678*b*.	Longitudinal Section	1374
679.	Cumulative Curves for Roll Crushed and Stamp Crushed Material, also Compromise Curve	1376
680.	Single-Spigot Vortex Classifier with Rectangular Pockets	1377
681.	Single-Spigot Vortex Classifier with Cylindrical Pocket	1377
682.	Triangle of Sizes and Weights	1378
683*a*.	Side Elevation of Tank Vortex Classifier	1379
683*b*.	Plan	1379
684.	Curve Showing Relation of Size to Tonnage	1380
685.	Colorado Iron Works Cone Classifier	1381
686.	Fried. Krupp Spitzlutten	1382
687.	Richards' Annular Vortex Classifier for Coarse Grains	1383
688.	Richards' Annular Vortex Classifier for Fine Grains	1384
689*a*.	Side Elevation of Richards' Shallow-Pocket Hindered-Settling Classifier	1385
689*b*.	Plan	1385
689*c*.	Cross-section	1386
690.	Richards' Undercurrent	1386
691*a*.	Longitudinal Section, Wolf-Tongue Classifier	1387
691*b*.	Plan	1387
691*c*.	Cross-section	1388
692*a*.	Side Elevation of Richards' Pulsator Classifier	1388
692*b*.	Plan	1389
692*c*.	Sectional End Elevation	1389
693.	Tree of Pulsator Classifier Test	1391

FIGURES.		PAGES.
694.	Graphical Representation of Sizing Test upon Pulsator Classifier Products	1396
695.	Richards-Shepard Spitzkasten or Perforated Board Classifier	1401
696*a*.	Callow Settling Cone	1403
696*b*.	Plan	1403
697.	Coarse Sand Tank, Sherman System	1405
698.	Sherman Settling Tank System	1405
699.	Merrill Conical Settling Tanks	1406
700.	Merrill Cylindrical Clarifying Tank	1406
701.	Colorado Iron Works Central-Feed Slime Tank	1407
702.	Colorado Iron Works Side-Feed Slime Tank	1407
703.	The Ayton Intermittent Thick Pulp Extractor	1408
704.	Binkley's Settling System	1409
705.	Skimming Launder	1409
706*a*.	Tay's Clarifying Tank	1410
706*b*.	Plan	1410
707.	Slime System at Van Ryn Gold Mines Estate, South Africa	1411
708*a*.	Section of Scobey Sand Box	1412
708*b*.	Plan	1412
709.	Diagram Illustrating the Effect of Electrolytes in Settling Slime	1415
710*a*.	Mechanical Divider	1418
710*b*.	Section Showing Pockets	1418
711.	Column of Water to Support a Cube of Mineral	1421
712.	Logarithmic Curves of Average Velocities and Diameters of the Complete Series	1424
713.	Separation of Quartz and Galena by Hindered-Settling Classifier and Sieves	1429
714.	Hindered-Settling Classifier as arranged for Full-Teeter Test	1430
715.	Separation of Quartz and Galena by Free-Settling Classifier and Sieves	1434
716.	Small Sorting Table. Krupp Type	1436
717.	Suspended Sorting Table. Krupp Type	1436
718*a*.	Large Annular Sorting Table. Section	1437
718*b*.	Plan	1437
719.	Revolving Picking Table	1437
720*a*.	Outline of the Hancock Jig	1440
720*b*.	Plan	1440
720*c*.	Cross-section	1440
721.	New Century Jig	1444
722*a*.	New Century Middlings Discharge	1445
722*b*.	Section Through Centers	1445
722*c*.	Middlings Draw Valve	1445
723*a*.	New Century Double End-Draw for Coarse Middlings. Plan	1445
723*b*.	Section on "A–B"	1445
723*c*.	End View from Interior of Tank	1445
724.	Hodge Jig	1446
725.	Krupp Jig. Harz Type	1446
726*a*.	Woodbury System — Longitudinal Section. Insert	1447
726*b*.	Plan. Insert	1447
727.	Flow Sheet of Evans Jigs. Mill 162	1451
728.	Flow Sheet of Woodbury Classifiers and Jigs. Mill 162	1452
729*a*.	Richards' Pulsator Jig. Elevation	1454
729*b*.	Plan	1454
729*c*.	Section	1454
730*a*.	Side Elevation. Quick Return Motion Mechanism	1457
730*b*.	Section	1457
731.	Diagrammatic Representation of Action of Differential-Motion Variable-Crank Mechanism	1457
732.	Monteponi Jig Discharge	1458
733.	No. 5 Wilfley Table	1465
734.	Wilfley Table Head Motion	1466
735.	Deck of No. 5 Wilfley Table	1467
736.	Deck Construction of No. 5 Wilfley Table	1467
737.	Usual Division of Products on a Wilfley Table	1470
738.	Ideal Sketch of the Arrangement of Grains by a Wilfley Table	1475
739.	Ideal Sketch of Classifier Product	1476
740.	Pinder Concentrator	1480
741.	Top of Pan of Pinder Concentrator	1480
742*a*.	Dodd Buddle. Plan	1482

FIGURES.		PAGES.
742*b*.	Elevation	1482
743.	Card Table Elevation	1483
744.	Card Table Head Motion	1483
745.	Deck of Card Table	1484
746.	Section of Card Table Riffles	1484
747.	Section of Square Riffles	1484
748.	Tipping Frame of Overstrom Table	1485
749.	Head Motion of Overstrom Table	1486
750.	Overstrom Table Top	1486
751.	The Bartlett Simplex Concentrator	1487
752.	The No. 2 Deister Table	1488
753.	Riffles on No. 3 Deister Table	1489
754.	The Ferraris Patent Table	1490
755.	The James Table	1491
756.	The James Slimer	1491
757.	The McLeod Concentrator	1493
758.	The New Humboldt Concentrator	1494
759.	Frame of New Woodbury Concentrator	1495
760.	The New Woodbury Concentrator	1495
761.	Belt Percussion Table	1496
762.	The Bartsch Rotary Percussion Table	1497
763.	The Horn Rotary Slime Concentrator	1499
764.	The Akens and Evans Slime Concentrator	1500
765.	Frame of Johnston Vanner	1501
766.	Exaggerated Diagram Showing Johnston Vanner Motion	1501
767.	Johnston Vanner Suspension used at Mill 167	1503
768.	Section of "Crack-Proof" Vanner Belt	1503
769*a*.	Shackleford's Patent Box-Cleaning Device	1503
769*b*.	Longitudinal Section	1503
770.	Frame of Wilfley Slimer	1504
771.	The Wilfley Slimer	1505
772.	The Sherman Slimer	1506
773*a*.	Plan of Rag Frames	1508
773*b*.	Sectional Elevation	1508
774.	Dimmick Slime Table	1507
775*a*.	Caribou Riffle	1509
775*b*.	Cross-section at a-a	1509
776.	La Point Suspended Riffles	1510
777*a*.	Longitudinal Section of Copper Plate Table	1513
777*b*.	End Elevation	1513
778*a*.	Elevation. Shaking Amalgamating Table	1513
778*b*.	End Elevation	1514
779.	Amalgamating Table with Back Deflectors	1514
780.	Absorption of Mercury by Copper Plate	1515
781.	Absorption of Mercury by Plates of Different Metals	1515
782.	Box Trap. Krupp Type	1516
783.	Longitudinal Section of Pierce Amalgamator	1517
784*a*.	Fried. Krupp Amalgam Press. Side Elevation	1518
784*b*.	Transverse Section on Line A B	1518
785.	Power Amalgam Press	1519
786.	Method of Sealing Retorts	1519
787.	Principle of Wetherill Type "E" Separator	1522
788.	Cross-section Wetherill Type "E" Separator	1523
789*a*.	Ferraris Magnetic Separator. Elevation	1526
789*b*.	Plan	1526
789*c*.	Cross-section	1526
790.	Ball-Norton Belt-Type Magnetic Separator	1527
791.	Sectional View of Leighton Magnetic Separators	1529
792.	Ferraris Drum-Type Separator	1529
793*a*.	Eriksson's Magnetic Separator. Elevation	1530
793*b*.	Plan	1530
793*c*.	Section	1530
794.	Cranberry Drum-Type Magnet	1531
795*a*.	Cobbing Magnet at Mill of Manhattan Asbestos Company	1531
795*b*.	Side Elevation	1531
796*a*.	Cobbing Magnet at Broughton Asbestos Company's Mill	1532

FIGURES.		PAGES.
796*b*.	Side Elevation	1532
797.	Eastwood Lifting Magnet	1532
798*a*.	Bilharz Cobbing Magnet	1533
798*b*.	Plan	1533
799.	The International Separator	1534
800.	Armature of International Separator	1533
801.	Ullrich Separator	1536
802.	Mechernich Magnetic Separator	1536
803.	No. 5 Gröndal Separator	1538
804*a*.	Forsgren's Magnetic Separator	1539
804*b*.	Cross-section	1539
804*c*.	Section Showing Secondary Poles	1539
805.	Ding's Magnetic Separator	1540
806.	Knowles' New Century Magnetic Separator	1541
807.	Cleveland-Knowles Magnetic Separator	1543
808.	Diagram Showing Effect of Roasting Pyrite for Varying Lengths of Time	1545
809.	Calcining Furnace used at Friedrichssegen, Germany	1546
810.	Section of Wilfley Roasting Furnace	1547
811.	Principle of Action of Blake-Morscher Separator	1550
812.	Blake-Morscher Separator. Vertical Section	1551
813.	Principle of the Huff Electrostatic Separator	1552
814.	Freid Gravity Dry-Process Separator	1554
815.	Section of Riffles of Sutton, Steele, and Steele Table	1554
816.	Elmore Vacuum Oil Concentrator	1557
817.	DeBavay Flotation Apparatus	1563
818*a*.	Macquisten Tube. Elevation and Partial Section	1564
818*b*.	Plan	1564
818*c*.	End View	1564
819*a*.	Side Elevation of Drying Bin at Mill 100	1571
819*b*.	Front Elevation	1571
820*a*.	Front Elevation of Riffle Cabinet	1572
820*b*.	Plan	1572
820*c*.	End Elevation	1572
820*d*.	Riffle	1572
821.	The Lamb Automatic Tailings Sampler	1573
822.	Taylor and Brunton Sample Riffles	1578
823*a*.	Driving Discs of Perfection Ore Feeder	1578
823*b*.	Section	1578
823*c*.	Elevation of Perfection Ore Feeder	1579
823*d*.	Plan	1579
824.	Perfect Feeder. Elevation	1580
825.	Push Feeders at Mill 113	1581
826*a*.	Old Style Helical Conveyor Flight. Section	1582
826*b*.	Helicoid Conveyor Flight. Section	1582
827*a*.	Push Conveyor, Forward Stroke	1584
827*b*.	Push Conveyor, Backward Stroke	1584
828.	Self-Oiling Carrier for Conveyor Belts	1585
829.	Automatic Self-Propelling Tripper	1586
830.	Elevation of Sand Wheel	1587
831*a*.	Runner of Traylor Centrifugal Sand Pump	1588
831*b*.	Liner	1588
831*c*.	Follower	1588
832.	Traylor Centrifugal Sand Pump	1589
833.	Lancaster Rotary Pump. Section	1590
834*a*.	Fleming Dewatering Wheel	1591
834*b*.	Front View	1591
835.	Dewatering Wheel at Mill 141	1591
836*a*.	Rogers' Dewatering Screen. End Elevation	1592
836*b*.	Side Elevation	1592
837.	Overstrom's Launder Diagram	1593
838.	Diagrammatic Sketch of Grill Four-Compartment Drier	1596
839*a*.	Section of Alsing Improved Drier	1598
839*b*.	Plan	1598
839*c*.	Cross-section	1598
840*a*.	Side Elevation, American Process Company's Drier	1599
840*b*.	Plan View	1599

FIGURES.		PAGES.
840*c*.	End Elevation	1599
841.	Blaisdell Tank Plug	1600
842*a*.	Blaisdell Excavator. Side Elevation	1601
842*b*.	Plan	1602
842*c*.	End Elevation	1602
843.	Blaisdell Slime Agitator	1603
844.	Weighing and Recording Mechanism of Blake–Denison Weigher	1604
845*a*.	Libra Scales. Side View	1605
845*b*.	End View	1605
846.	Caldwell Friction Clutch	1606
847*a*.	Separator for Removing Wood. Section	1607
847*b*.	Plan	1608
847*c*.	End Elevation	1607
848*a*.	Longitudinal Section of Pilling Air Hoist	1608
848*b*.	Cross-section	1608
849.	Pulp Flow Diagram. Mill 108	1648
850.	Solution Flow Diagram. Mill 108	1649
851.	Lubricating Device for Journals	1930
852.	Bardwell Sorting Tube	1988
853.	Cumulative Curves of Sorting Tube Tests	1990
854*a*.	12-Spigot Classifier	1990
854*b*.	End View	1990
854*c*.	Plan	1990
855.	Hand-Jig for Testing	1991
856*a*.	Laboratory Wilfley Table. Elevation	1991
856*b*.	Plan	1992
857.	Van Meter's Oil Testing Device	1992
858.	Longitudinal Section of Delameter Coal-testing Device	1993
859.	Double-Pole Electromagnet	1993
860*a*.	Laboratory Wetherill Separator	1994
860*b*.	Cross-section	1994

LIST OF BOOKS AND PERIODICALS REFERRED TO IN VOLUMES III AND IV.

BOOKS.

Allen, Robert. West Australian Metallurgical Practice. Kalgoorlie (1906).

Bell, Robert N. Ninth Annual Report on the Mining Industry of Idaho for the Year 1907. Boise, Idaho, 1908.

Cirkel, Fritz. Asbestos, Bulletin of the Department of the Interior, Mines Branch, Dominion of Canada, Ottawa, 1905.

Clark, Donald. Australian Mining and Metallurgy. Melbourne, 1904. Critchley Parker.

Collett, Harold. Water Softening and Purification. London, 1896.

Cushman, A. S. Effect of Water on Rock Powders. Bulletin 92, United States Department of Agriculture, Bureau of Chemistry. Washington, D. C.

Cushman, A. S. and Prevost Hubbard. The Decomposition of the Feldspars. Bulletin United States Department of Agriculture. Washington, D. C.

Goupillière, Haton de la. Exploitation des Mines. Edition 2. Paris, 1896.

Hubbard, Prevost. See Cushman, A. S.

Ingalls, W. R. Report of the Commission Appointed to Investigate the Zinc Resources of British Columbia and the Conditions Affecting their Exploitation. Bulletin of the Department of the Interior, Mines Branch Dominion of Canada. Ottawa, 1906.

Julian, H. Forbes and Edgar Smart. Cyaniding of Gold and Silver Ores. Edition 2. London, 1907.

La Coux, H. de. Industrial Uses of Water. Translation by A. Morris. London, 1903.

Morris, A. See la Coux.

Poynting, John Henry and J. J. Thomson. Text Book of Physics. London, 1902.

Preston, E. B. California Gold Mill Practices. California State Mining Bureau. Sacramento, California, 1901.

Rose, T. Kirke. Metallurgy of Gold. Fourth Edition. London, 1902.

Stokes, Sir George Gabriel. Mathematical and Physical Papers. Cambridge, University Press, 1901.

Thomson, J. J. See Poynting, John Henry.

PERIODICALS.

Am. Inst. Min. Eng. = Transactions of the American Institute of Mining Engineers. Annually. New York.

Ann. des Mines de Belgique = Annales des Mines de Belgique. Annually. Bruxelles.

Austr. Inst. Min. Eng. = Transactions of the Australasian Institute of Mining Engineers. Annually. Melbourne, Australia.

Austr. Min. Standard = Australian Mining Standard. Electrical Record and Financial Review. Weekly. Melbourne, Australia. Critchley Parker.

Berg. u. Hutt. Jahrb. = Berg und Hüttenmännisches Jahrbuch. Quarterly. Vienna.

Can. Min. Inst. = Journal of the Federated Canadian Mining Institute. Vols. I to III (1896–1898); Journal of the Canadian Mining Institute, Vol. I. (1898), to date. Annually. Ottawa, Canada.

Chemical Engineer = The Chemical Engineer. Monthly. Chicago.

Copper Handbook. Annually. Houghton, Michigan. Horace J. Stevens.

Electrochemical and Metallurgical Industry. Monthly. New York. Electrochemical Publishing Company.

Engineering News = Engineering News and American Railway Journal. Weekly. New York.

Eng. & Min. Jour. = Engineering and Mining Journal. Weekly. New York.

Equipment News. Published monthly by the Hendrie and Bolthoff Manufacturing and Supply Company, Denver, Colorado.

Inst. Min. & Met. = Transactions of the Institution of Mining and Metallurgy. Annually. London.

Iron Age. Weekly. New York. David Williams Company.
Iron Trade Review. Weekly. Cleveland, Ohio. Penton Publishing Company.
Jour. Am. Chem. Soc. = Journal of the American Chemical Society. Monthly. Easton, Pennsylvania.
Jour. Chem. Met. & Min. Soc. = Journal of the Chemical Metallurgical and Mining Society of South Africa. Annually. Johannesburg, South Africa.
Los Angeles Mining Rev. = Los Angeles Mining Review. Los Angeles, California.
Mineral Industry. Annually. New York. Hill Publishing Company.
Mineral Resources = Mineral Resources of the United States. Annually. United States Geological Survey. Washington, D. C.
Mines & Minerals = Mines and Minerals. Monthly. Scranton, Pennsylvania.
Min. & Met. Jour. = Mining and Metallurgical Journal. Denver, Colorado.
Min. & Sci. Press = The Mining and Scientific Press. Weekly. San Francisco.
Mining Reporter = Mining Reporter. Weekly. Denver, Colorado. 1873 to 1907 inclusive. 1908 to date as Mining Science.
Mining Science. = Mining Science. Weekly. Denver, Colorado. See Mining Reporter.
Mining World = The Mining World. Weekly. Chicago, Illinois.
Oest. Zeit. = Oesterreichische Zeitschrift für Berg und Hüttenwesen. Weekly. Vienna.
Pacific Miner. Portland, Oregon.
Philosophical Magazine = Philosophical Magazine and Journal of Science. Monthly. London.
S. Afric. Min. Review = South African Mining Review. Johannesburg. South Africa.
Western Chem. & Met. = Western Chemist and Metallurgist. Published monthly by the Western Association of Technical Chemists and Metallurgists. Denver, Colorado.
Zeitschrift des Vereines Deutscher Ingenieure. Weekly. Berlin.

TABLE 410.

KEY TO MILL NUMBERS.

Mill No. (a)	Name.	Location.	Economic Minerals.	Gangue.	Capacity. Tons in Hours.
95.	Elkton Consolidated Mining and Milling Company.	Elkton, Colorado.	Native gold, calaverite, and pyrite.	Quartz, fluorite, and decomposed granite.	
96 (b).	Central Mill of the North Star Mines Company.	Grass Valley, California.	Native gold and auriferous pyrite.	Quartz and diabase.	135 in 24.
97.	Boston-Richardson Mining Company.	Goldboro, Nova Scotia, Canada.	Auriferous arsenopyrite.	Quartz and slate.	175 in 24.
98.	Haile Gold Mining Company.	Haile Gold Mine, Lancaster County, South Carolina.	Native gold and auriferous pyrite.	Siliceous.	150 in 24.
99.	Selenide Silver Mill.	Lebong-Donok, Sumatra.	Selenium, silver, and iron minerals.	Siliceous.	90 in 10(c).
100.	Camp Bird, Limited.	Ouray, Colorado.	Native gold and silver, argentiferous and auriferous pyrite, galena, sphalerite, and a little chalcopyrite and magnetite.	Quartz, rhodonite, and calcite.	230 in 24.
101.	Combination Mill of the Goldfield Consolidated Mining Company.	Goldfield, Nevada.	Gold and silver in iron oxides and sulphides, also copper with small values in zinc, bismuth, and antimony.	Silicified dacite.	100 in 24.
102.	Custom Mill of the Nevada-Goldfield Reduction Company.	Goldfield, Nevada.	Various gold and silver ores.	Various.	100 in 24.
103.	Liberty Bell Gold Mining Company.	Telluride, Colorado.	Native gold and silver, also argentiferous and auriferous sulphides.	Quartz and calcite.	350 in 24.
104.	Pittsburg-Silver Peak Gold Mining Company.	Blair, Nevada.	Gold and silver.	Quartz and alaskite.	400 (d) in 24.
105.	The Great Boulder Perseverance Mine.	Kalgoorlie, Australia.	Argentiferous and auriferous tellurides, pyrite, and arsenopyrite.	Gray and green schists and quartz.	480 in 24.
106 (e).	Homestake Mining Company.	Lead, South Dakota.	Auriferous oxides and sulphides, mainly pyrite, pyrrhotite, chalcopyrite, and arsenopyrite.	Quartz and mica schist or slate.	4000 in 24.
107.	Luipaards-Vlei Estate.	Witwatersrand, South Africa.	Native gold and auriferous pyrite.	Hard conglomerate of quartz pebbles bonded by a siliceous and ferruginous cement.	540 in 24.
108.	Meyer and Charlton Gold Mining Company, Limited.	Witwatersrand, South Africa.	Native gold and auriferous pyrite.	Hard conglomerate and quartz pebbles bonded by a siliceous and ferruginous cement.	360 in 24.
109.	Robinson Deep Gold Mining Company, Limited.	Witwatersrand, South Africa.	Native gold and auriferous pyrite.	Hard conglomerate of quartz pebbles bonded by a siliceous and ferruginous cement.	1423 in 24.
110.	Simmer Deep, Limited.	Witwatersrand, South Africa.	Native gold and auriferous pyrite.	Hard conglomerate of quartz pebbles bonded by a siliceous and ferruginous cement.	2400 in 24.

Mill No. (*a*)	Name.	Location.	Economic Minerals.	Gangue.	Capacity. Tons in Hours.
111.	Dredge of the Gold Bluff Mining Company.	Orick, California.	Native gold, platinum, mercury and magnetite, ilmenite, chromite, garnets, and zircon.	Quartz and pyroxene silicates.	1200 in 24.
112.	The Central Mill of the Twelve Apostles Mine.	Gurabárza, Transylvania, Hungary.	Native gold and auriferous sulphides.	Trachyte, porphyry, and greenstone.	465 in 24.
113.	Capital Mining and Tunnel Company.	Georgetown, Colorado.	Native gold, argentiferous chalcopyrite, galena, sphalerite, and pyrite.	Hard quartz and decomposed feldspar.	175 in 24.
114.	"The 60 Mill" of the Tomboy Gold Mines Company, Limited.	Telluride, Colorado.	Native gold and silver, argentiferous and auriferous galena, sphalerite, and pyrite.	Quartz.	300 in 24.
115.	El Potrerito Mill.	El Potrerito Camp, Chihuahua, Mexico.	Native gold and silver, argentite, pyragyrite, proustite, tetrahedrite, and pyrite.	Quartz.	20 (*d*) in 24.
116.	Concheño Mill.	Concheño Camp, Chihuahua, Mexico.	Native gold and silver, argentite, pyragyrite, proustite, tetrahedrite, and pyrite.	Quartz.	150 (*d*) in 24.
117.	Desert Power and Mill Company.	Millers, Nevada.	Gold, silver as sulphides and sulphantimonides, pyrite and chalcopyrite with traces of other minerals.	Quartz, sericite, andalusite, and calcite.	485 in 24.
118.	El Oro Mining and Railway Company, Limited.	El Oro, Estado de Mexico, Mexico.	Gold, silver, and pyrite.	Siliceous.	775 in 24.
119.	The Coniagas Mines, Limited.	St. Catharines, Ontario, Canada.	Smaltite, niccolite, and silver both native and as sulphides.	Calcite and slate conglomerate.	90 in 24.
120 (*f*).	Bunker Hill and Sullivan Mining and Concentrating Company.	Kellogg, Idaho.	Argentiferous galena, pyrite, chalcopyrite, and sphalerite.	Siderite and quartz.	3000 in 24.
121.	Mace Mill Number 1 of the Federal Mining and Smelting Company.	Wallace, Idaho.	Argentiferous galena, pyrite, and sphalerite.	Quartzite and quartz.	450 in 24.
122 (*g*).	Morning Mill of the Federal Mining and Smelting Company.	Mullan, Idaho.	Argentiferous galena, pyrite, and sphalerite.	Siderite and quartz.	300 in 24.
123.	Hecla Mining Company.	Burke, Idaho.	Argentiferous galena, pyrite, and sphalerite.	Quartz and basalt.	250 in 24.
124 (*h*).	Mill Number 3 of the Federal Lead Company.	Flat River, Missouri.	Argentiferous galena and pyrite.	Calcite and dolomite.	2600 in 24.
125 (*i*).	Smuggler Mining Company.	Aspen, Colorado.	Native silver, argentiferous galena, pyrite, argentiferous barite, sphalerite, and smithsonite.	Dolomite and quartz.	400 in 24.
126 (*j*).	Hoffman Mill of the St. Joseph Lead Company.	Leadwood, Missouri.	Galena and a little pyrite.	Limestone.	1200 in 24.
127.	St. Louis Smelting and Refining Company.	Desloge, Missouri.	Galena.	Dolomite.	1800 in 24.
128.	Block 10 Mine.	Broken Hill, New South Wales, Australia.	Argentiferous galena and sphalerite.	Rhodonite and rhodochrosite.	575 in 24.
129.	The Broken Hill Proprietary Mine.	Broken Hill, New South Wales, Australia.	Argentiferous galena and sphalerite with some carbonates.	Quartz and rhodonite.	1000 in 24.
130.	The Sulphide Corporation, Limited.	Central Mine, Broken Hill, New South Wales, Australia.	Argentiferous galena and sphalerite.	Rhodonite and quartz with some rhodochrosite.	700 in 24.
131.	Daly-Judge Mining Company.	Park City, Utah.	Argentiferous galena, sphalerite, and pyrite.	Limestone and quartzite.	400 in 24.

Mill No. (*a*)	Name.	Location.	Economic Minerals.	Gangue.	Capacity. Tons in Hours.
132.	Daly-West Mining Company.	Park City, Utah.	Tetrahedrite, galena, sphalerite, and chalcopyrite with some carbonates.	Limestone and quartzite.	500 in 24.
133.	Ivanhoe Mill of the Minnesota Silver Company, Limited.	Sandon, British Columbia, Canada.	Argentiferous galena and sphalerite.	Slate and siderite (*c*).	150 in 24.
134.	Monitor Mill of the Monitor and Ajax Fraction, Limited.	Roseberry, British Columbia, Canada.	Argentiferous galena, and sphalerite.	Slate and Siderite (*c*).	100 in 24.
135.	Magnetic Plant at the Central Mine.	Central Mine, Broken Hill, New South Wales, Australia.	Argentiferous galena, sphalerite, and pyrite.	Rhodonite and quartz with some rhodochrosite.	240 in 24.
136 (*k*).	The Frisco Consolidated Mining Company.	Gem, Idaho.	Argentiferous galena, sphalerite, and magnetite.	Quartzite.	400 in 24.
137 (*l*).	Ferraris Calamine Mill.	Monteponi, Sardinia.	Calamine, smithsonite, limonite, galena, cerrusite, siderite, and sphalerite with small silver values.	Calcite, dolomite, and barite.	240 in 11.
138.	Velardeña Mining and Smelting Company.	Velardeña, Durango, Mexico.	Argentiferous galena, sphalerite, and pyrite.	Hard porphyry with a little limestone.	175 in 24.
139.	Minas Tecolotes y Anexas.	Santa Barbara, Chihuahua, Mexico.	Argentiferous and auriferous galena, sphalerite, and pyrite.	Quartz.	600 in 24.
140.	Colorado Zinc Company.	Denver, Colorado.	Argentiferous and auriferous galena, sphalerite, and pyrite.	Quartz.	75 in 24.
141.	Empire Zinc Company.	Canon City, Colorado.	Argentiferous and auriferous galena, sphalerite, and pyrite.	Quartz.	150 in 24.
142.	The Humphrey Mill of the Creede United Mines.	Creede, Colorado.	Argentiferous and auriferous galena, sphalerite, pyrite, and hematite.	Altered trachyte and quartz.	275 in 24.
143.	Gold Prince Mines.	Animas Forkes, Colorado.	Native gold, tetrahedrite and auriferous pyrite, sphalerite, galena, and chalcopyrite.	Quartz and rhodonite.	500 in 24.
144.	Silver Lake Mill of the Garfield Smelting Company.	Silverton, Colorado.	Argentiferous and auriferous galena, chalcopyrite, pyrite, and sphalerite.	Quartz and rhodochrosite.	350 in 24.
145.	Ore Dressing Plant of the Mines de Pierrefitte.	Pierrefitte, Nestalas, Hautes Pyrenees, France.	Galena and sphalerite.		150 in 24.
146.	Ore Dressing Plant of the Neue Helene Mine.	Hohenlohe Werke, Upper Silesia.	Sphalerite, galena, and pyrite.	Dolomite.	280 in 10.
147.	New Central Mill of the Atkien Company.	Vielle Montagne, Aachen, Prussia.	Sphalerite, pyrite, and galena.	Calcite and dolomite in a clayey shale.	110 in 10.
148.	Mills Mining and Reduction Company.	Hazel Green, Wisconsin.	Sphalerite, marcasite, and galena.	Limestone.	200 in 10.
149.	Adelaide Star Mines, Limited.	Golconda, Nevada.	Chalcopyrite, pyrite, sphalerite, and galena.	Hard quartz with spinel and garnet.	125 in 24.
150 (*m*).	New Central Ore Dressing Plant.	Clausthal, Germany.	Galena, sphalerite, chalcopyrite, and siderite.	Mica and argillaceous schists, calcite, fluospar, and quartz.	360 in 10.
151.	The Compania Minera Del Tiro General.	Charcas, San Luis Potosi, Mexico.	Pyrite, sphalerite, galena, and chalcopyrite as well as surface carbonates and oxides.	Siliceous limestone.	100 (*c*) in 24.
152 (*n*).	Number 2 Mill of the New Jersey Zinc Company.	Franklin Furnace, New Jersey.	Zincite, willemite, and franklinite besides a number of minerals of minor importance.	Calcite and biotite.	1200 in 24.
153.	Magnetic Separating Plant of the Krupp Mining Administration.	Kirchen on the Sieg, Germany.	Siderite and rhodochrosite.		20 in 10.

Mill No. (a)	Name.	Location.	Economic Minerals.	Gangue.	Capacity. Tons in Hours.
154.	Oliver Iron Mining Company.	Hibbing, Minnesota.	Hematite and limonite.	Taconyte.	1000 in 10(c).
155 (o).	Longdale Iron Company.	Longdale, Virginia.	Limonite of concretionary structure.	Clay and shale with sandstone and pebbles.	200 in 10.
156.	Cranberry Mill.	Cranberry, North Carolina.	Magnetite.	Hornblende, epidote, quartz, and feldspar.	350 in 10.
157 (p).	Concentrating Mill of the Wharton Steel Company.	Wharton, New Jersey.	Magnetite.	Granite.	360 in 24.
158 (q).	Witherbee, Sherman and Company, Inc.	Mineville, Essex County, New York.	Magnetite and apatite.	Gneiss, silica, feldspar, and hornblende.	1500 in 10.
159.	Lebanon Plant of the Pennsylvania Steel Company.	Lebanon, Pennsylvania.	Magnetite, chalcopyrite, and pyrite.	Limestone and sandstone slate.	975 in 24.
160.	Concentrator Number 2 of the Moctezuma Copper Company.	Nacozari, Sonora, Mexico.	Auriferous chalcopyrite, pyrite, and bornite.	Quartz.	2000 in 24.
161 (r).	Anaconda Copper Mining Company.	Anaconda, Montana.	Chalcocite, bornite, enargite, cupriferous pyrite, covellite, sphalerite, galena, and a little chalcopyrite.	Quartz and altered granite.	8800 in 24.
162 (s).	Boston and Montana Consolidated Copper and Silver Mining Company.	Great Falls, Montana.	Tetrahedrite, tennantite, and telluride, chalcocite, bornite, enargite, cupriferous pyrite, covellite, sphalerite, galena, and a little chalcopyrite.	Quartz and altered granite.	3000 in 24.
163.	Basin Reduction Company.	Basin, Montana.	Argentiferous and auriferous copper sulphides.	Granitic.	1000 in 24.
164 (t).	Butte Reduction Works.	Butte, Montana.	Argentiferous and auriferous chalcocite, bornite, chalcopyrite, pyrite, and sphalerite.	Quartz and decomposed feldspar.	500 in 24.
165.	Boston Consolidated Mining Company.	Garfield Beach, Utah.	Argentiferous and auriferous chalcopyrite, chalcocite, and bornite.	Porphyry.	3000 in 24.
166.	Cactus Mill of the Newhouse Mines and Smelter.	Newhouse, Utah.	Argentiferous and auriferous pyrite, chalcopyrite, and native copper.	Granite.	1000 in 24.
167.	Garfield Plant of the Utah Copper Company.	Garfield, Utah.	Argentiferous and auriferous chalcocite, bornite, and chalcopyrite.	Porphyry.	6000 in 24.
168.	The Caucasus Copper Company, Limited.	Dzansaul, Kutais, Russia.	Argentiferous and auriferous chalcopyrite.	Siliceous.	500 in 24.
169.	Giroux Consolidated Mines Company.	Ely, Nevada.	Argentiferous and auriferous chalcopyrite, chalcocite, and melaconite.	Monzonite and talcose-quartz.	800 in 24.
170.	Steptoe Valley Smelting and Mining Company.	McGill, Nevada.	Argentiferous and auriferous chalcocite, pyrite, chalcopyrite, melaconite, magnetite, and limonite.	Quartz—porphyry.	4000 in 24.
171.	Concentrator Number 6 of the Arizona Copper Company, Limited.	Morenci, Arizona.	Argentiferous and auriferous chalcocite.	Siliceous.	700 in 24.
172.	Detroit Copper Mining Company of Arizona.	Morenci, Arizona.	Chalcocite and other copper sulphides.	Siliceous.	1100 in 24.
173.	Concentrator Number 2 of the Cananea Consolidated Copper Company.	Cananea, Sonora, Mexico.	Argentiferous and auriferous chalcopyrite, chalcocite, pyrite, and native copper.	Siliceous and talcose.	2800 in 24.
174.	Old Dominion Copper Mining and Smelting Company.	Globe, Arizona.	Argentiferous and auriferous chalcocite, pyrite, and native copper.	Highly kaolinized and siliceous porphyry.	500 in 24.

Mill No. (a)	Name.	Location.	Economic Minerals.	Gangue.	Capacity. Tons in Hours.
175 (u).	Eustis Mining Company.	Eustis, Quebec, Canada.	Cupriferous pyrite.	Quartz, talcy-schist, and siliceous limestone.	200 (d) in 24.
176.	Pike Hill Mines, Incorporated.	Corinth, Vermont.	Chalcopyrite and pyrrhotite.	Siliceous.	40 in 24.
177 (v).	Calumet and Hecla Mining Company.	Calumet, Michigan.	Native copper and silver.	Rhyolite conglomerate with calcite, epidote, and martite.	10200 in 24.
178.	Baltic Mining Company.	Baltic, Michigan.	Native arsenical copper and melaconite.	Baltic amygdaloid.	2600 in 24.
179.	Champion Copper Company.	Painesdale, Michigan.	Native copper.	Baltic amygdaloid.	3900 in 24.
180.	The Trimountain Mining Company.	Trimountain, Michigan.	Native copper.	Baltic amygdaloid.	2100 in 24.
181 (w).	Osceola Consolidated Mining Company.	Opechee, Michigan.	Native copper.	Osceola amygdaloid, calcite, prehnite, and magnetite.	5250 in 24.
182 (x).	Quincy Mining Company.	Hancock, Michigan.	Native copper.	Pewabic amygdaloid.	4700 in 24.
183.	Arminius Mines.	Mineral, Louisa County, Virginia.	Cupriferous pyrite.	Slate.	250 in 10.
184.	Pyrite Dressing Plant of the Verein Chemischer Fabriken.	Morgensternwerk, near Mersdorf, Rohnau, Silesia.	Pyrite.		150 in 20.
185 (y).	Dressing Tin Ores at the Old Clitters Mine.	Gunnis Lake, East Cornwall, England.	Cassiterite, wolframite, pyrite, arsenopyrite, and chalcopyrite.	Quartzite, granites, etc.	100 (d) in 24.
186 (z).	General Practice of Asbestos Dressing.	Quebec, Canada.	Actinolite and chrysotile.	Hornblende and serpentine.	
187 (*).	Cinnabar Ore Dressing.	Idria, Austria.	Cinnabar.		
188 (†).	Diamond Washing.	South Africa.	Diamonds.	Porphyritic peridotite.	

(a) Mills 1 to 94 inclusive as well as a few others will be found described in Ore Dressing, Vol. II., Chapter XX. (b) See Ore Dressing, Vol. II., p. 1018. (c) Probably. (d) About. (e) See Ore Dressing, Vol. II., p. 1025. (f) See Ore Dressing, Vol. II., p. 937. (g) See Ore Dressing, Vol. II., p. 946. (h) See Ore Dressing, Vol. II., p. 920. (i) See Ore Dressing, Vol. II., pp. 933 and 1004. (j) See Ore Dressing, Vol. II., p. 924. (k) See Ore Dressing, Vol. II., p. 942. (l) See Ore Dressing, Vol. II., p. 1066. (m) See Ore Dressing, Vol. II., p. 965. (n) See Ore Dressing, Vol. II., p. 1060. (o) See Ore Dressing, Vol. II., p. 896. (p) See Ore Dressing, Vol. II., p. 1058. (q) See Ore Dressing, Vol. II., p. 1059. (r) See Ore Dressing, Vol. II., p. 984. (s) See Ore Dressing, Vol. II., p. 974. (t) See Ore Dressing, Vol. II., p. 987. (u) See Ore Dressing, Vol. II., p. 904. (v) See Ore Dressing, Vol. II., p. 990. (w) See Ore Dressing, Vol. II., p. 994. (x) See Ore Dressing, Vol. II., p. 998. (y) See Ore Dressing, Vol., II. p. 1081. (z) See Ore Dressing, Vol. II., p. 1079. (*) See Ore Dressing, Vol. II., p. 1074. (†) See Ore Dressing, Vol. II., p. 1080.

CHAPTER XXII.

GENERAL PRINCIPLES.

§ 905. Ore dressing, or the mechanical preparation of ores, has been carefully defined in Ore Dressing, Vol. I., page 1, and the advantages to be gained by this sort of treatment have been clearly demonstrated. As a consequence of this nothing further need be said here, with regard to these points.

Year by year the mechanical treatment of ores is becoming a more important factor in mining operations. The opening up and working of enormous bodies of low-grade ore demands processes of treatment that shall be at once cheap and efficient. Enormous quantities of ore must be treated daily, and the plant must be arranged so that this can be done with the least possible amount of manual labor. Thus the mechanical handling of ores is coming to be of more and more importance, and the progress in ore separation has been less along the line of the discovery of new principles of separation than in applying to new and improved machines the principles already known.

§ 906. One new principle of separation has, however, come into use since the appearance of Ore Dressing in 1903. The fact that some minerals act as conductors, while others act as non-conductors of electricity has long been recognized, but only within a few years has it been possible to effect a commercial separation of two or more minerals by applying this principle. It has been found that the greater part of the sulphide minerals and the metals themselves are, in varying degrees, conductors of electricity, while the gangue minerals are in general non-conductors. If, therefore, ore particles are brought into contact with an electrode containing a static charge, the conductors become similarly charged and are repelled, whereas the non-conductors are in no wise affected. Upon this principle depend the electrostatic processes of ore separation which will be fully described in Chapter XXXIX.

§ 907. The flotation processes, which also will be discussed in Chapter XXXIX. and which are rapidly becoming of great importance, depend, for the most part, on the physical property of adhesion.

§ 908. The physical properties of interest in ore dressing may again be summarized as follows:

Hardness.
Tenacity and brittleness.
Structure and fracture.
Aggregation.
Color and luster.
Specific gravity and settling power.
Momentum.
Adhesion.
Greasiness.
Electro-conductivity.
Magnetism.
Change in condition by heat from non-magnetic to magnetic.
Change in mechanical condition by heat from dense to porous.
Decrepitation.

These properties, aside from that of conductivity to electricity, have been fully discussed in Volume I. of Ore Dressing.

CHAPTER XXIII.

PRELIMINARY CRUSHING.

§ 909. Since the appearance of Ore Dressing in 1903 there have been no radical changes in rock breakers. For coarse breaking the Blake and Dodge jaw breakers and the Gates gyratory breaker are still standard. If anything, the Gates has found more favor, especially where a large crushing unit is desired. The purpose of this chapter will be to present certain of the more important developments and improvements in ore-breaking machinery, together with recent data with regard to wearing parts. The classification of ore breakers adopted in Vol. I. will be adhered to in this place.

The two chief classes of machines are:

I. The jaw breakers, which are intermittent machines.

II. The spindle or gyrating breakers, which are continuous machines.

I. — Jaw Breakers.

Among the jaw breakers here treated we find representatives of two types according to the movements of the jaw:

(*a*) Those which are pivoted above so as to give the greatest movement on the smallest lump.

(*c*) Those which are pivoted below and have the greatest movement on the largest lump.

For a general discussion of the various types see Vol. I., § 41.

(*a*) Jaw breakers having the greatest movement on the smallest lump.

§ 910. The Farrel Foundry and Machine Company make breakers of the Blake type,[12] of which a sectional view is given with parts numbered (see Fig. 561).

The sizes and capacities of the Farrel breakers, as given by the manufacturers, are shown in Table 411.

TABLE 411.—SIZES, CAPACITIES, ETC., OF FARREL BREAKERS.

No.	Size of Mouth Opening in Inches.	Approximate Capacity. Tons per Hour to Sizes Stated in Inches.				Horse-power Required.	Size of Pulley. Inches.	Revolutions per Minute.	Total Weight. Pounds.	Weight of Heaviest Piece. Pounds.
		Tons. Diam.	Tons. Diam.	Tons. Diam.	Tons. Diam.					
1	3x 1½ *	.....	.....	.....	.....	.....	5x 1	275	100	40
2	6x 2	1 to 2 in.	0.4 to 1 in.	0.15 to ½ in.	.....	.....	11x 4	275	1,200	560
4 –B..	7x10	5 to 2	4.0 to 1½	2.5 to 1	1.5 to ¾ in.	8	20x 7½	300	6,000	2,800
5 –B..	20x 6	10.0 to 2	7.5 to 1½	6.0 to 1	3.5 to ½	12	30x 7½	300	11,000	6,000
7 –B..	16x10	12.0 to 2½	10.0 to 2	8.0 to 1½	6.0 to 1	15	30x 9	300	16,400	8,700
8 –B..	20x10	20.0 to 3	17.5 to 2½	15.0 to 2	10.0 to 1½	20	30x12	300	19,400	9,900
8½–B..	24x13	30.0 to 3	25.0 to 2½	20.0 to 2	15.0 to 1½	30	42x13	300	29,000	14,500
9 –B..	24x15	37.5 to 4	32.5 to 3½	.....	.....	30	42x13	300	29,000	14,500
10 –B..	30x13	30.0 to 2½	25.0 to 2	20.0 to 1½	.....	40	2–36x12	300	37,000	20,000
11 –B..	30x15	50.0 to 5	45.0 to 4	37.5 to 3	.....	40	2–36x12	300	37,000	20,000
12 –B..	36x18	50.0 to 3	45.0 to 2½	40.0 to 2	.....	65	2–42x13	300	57,500	27,500
14 –B..	36x24	100.0 to 6	85.0 to 5	.....	.....	65	2–42x13	300	59,000	28,500
15 –B..	36x24	60.0 to 3	.....	.....	.....	75	2–48x15	300	78,000	38,000

* For Laboratory Use.

§ 911. THE CARTERVILLE FOUNDRY AND MACHINE WORKS. — A good illustration of the development of a first-class machine is the Blake breaker manufactured by the Carterville Foundry and Machine Works.[8] Nearly 1500 of these breakers are in use and all of them handling from 150 to 300 tons in 10 hours. In designing this breaker, W. G. Bryant made a careful examination of several old breakers of different makes, which chanced to be in his possession at the time, with the idea in mind of discovering their weak points and avoiding these in his machine.

The principal defects noted by Mr. Bryant were as follows:

1. The lugs below the toggle wedge were too small.

2. No provision was made to keep the toggle plates from getting out of line and wearing the breaker frame.

3. The ore worked down between the movable jaw and breaker frame, causing excessive wear upon the latter.

4. The wearing away of the little brackets supporting the fixed jaw plate ultimately allowed the latter to slip down.

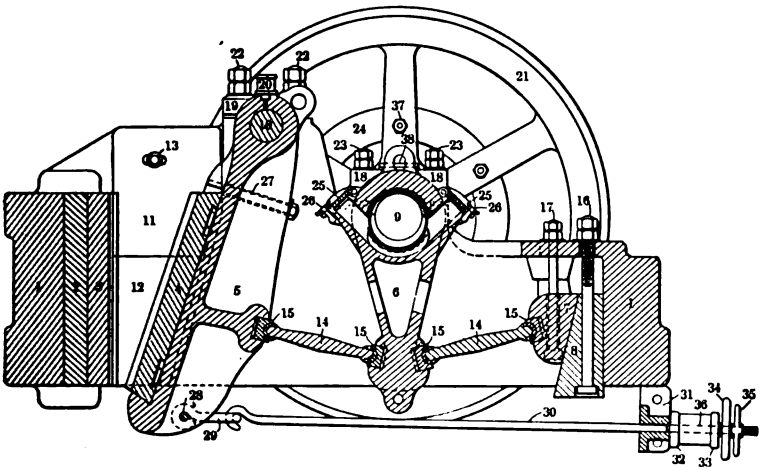

FIG. 561. — SECTIONAL VIEW OF FARREL "STYLE B" BREAKER.

KEY TO FIG. 561.

1. Main frame.
2. Round back.
3. Fixed jaw plate
4. Swing " "
5. " "
6. Pitman.
7. Toggle block.
8. Wedge.
9. Eccentric shaft.
10. Swing jaw "
11. Upper half cheek plate.
12. Lower " " "
13. Bolt for " "
14. Toggle.
15. " bearing.
16. Bolt for wedge.
17. " " toggle back.
18. Cover " main bearing.
19. " " swing jaw shaft.
20. Grease cup.
21. Balance wheel.
22. Bolt for swing jaw shaft cover.
23. " " main bearing.
24. Pulley.
25. Grease-box cover.
26. Bolt and thumb screw.
27. Bolt for swing jaw plate.
28. Shackle pin.
29. Spring rod shackle.
30. " "
31. " bar.
32. Washer.
33. "
34. Hand wheel.
35. Thumb nut.
36. Rubber spring.
37. Bolt for pulley.
38. Grease-box cover on main bearing.

5. The wearing away of the soft iron lip supporting the movable jaw plate allowed it to slip down, resulting in the formation of a lip upon its lower end.

6. The movable jaw shaft was found to have been cast solid with the movable jaw and made to turn in a 3-inch bearing upon either side. These boxes in

some cases were worn an inch or more lower upon one side than upon the other, thus throwing the jaw completely out of alignment and causing wear of the frame.

The changes made to correct the defects just mentioned are as follows:

1. The lugs on the back end of the breaker were cast five inches square above and below the toggle wedge.

2. Pieces were cast upon each side of the toggle boxes to keep them in alignment.

3. Cheek plates were arranged upon each side of the movable jaw to take the wear from the breaker frame.

4. The fixed jaw plate was provided with lugs fitting into recesses, so that when the cheek plates were in position the jaw plate was held firmly in place.

5. A wrought-iron or steel piece, arranged to be bolted to the bottom of the movable jaw, was substituted for the soft iron lip, and supported the steel or chilled-iron jaw plate.

6. The movable jaw shaft was provided with a readily replaceable box in the upper end of the movable jaw itself, thus giving it a 10 × 16-inch bearing, and the shaft was bolted stationary on each side of the breaker frame.

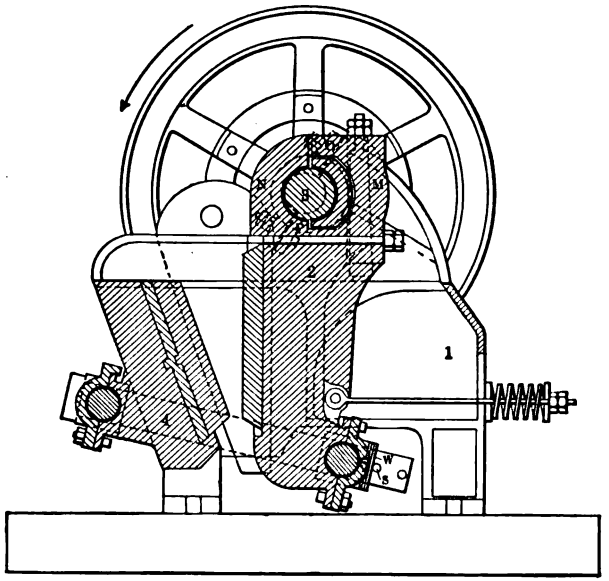

FIG. 562. — SECTION OF SAMSON BREAKER.

With this arrangement it has been found that a set of chilled-iron jaws will last from 30 to 60 days where the ore is mixed flint rock, while in soft limestone the same jaws would last from six months to one year. The side plates last the same length of time and toggle plates are changed only as the jaws wear out.

§ 912. THE FRIED. KRUPP GRUSONWERK [14] supplies rock and ore breakers of the Blake type. If desired, the eccentric shaft bearings are made adapted for ring lubrication, and in the large breakers provision is also made for convenient lubrication of the toggle-plate faces. The toggle block and wedge for adjusting the width of the slit are secured by strong wedge screws.

For countries where transportation presents difficulties the breakers are chiefly made of cast steel in order to reduce the weight. Moreover, the heavy parts can be taken to pieces for mule-back transportation. The fly-wheels are hollow and are filled with lead at the place of erection. These breakers are usually driven by belt. In special cases they are also arranged for being driven direct by steam, in that the eccentric shaft is rotated by a steam engine attached to the frame. This form of breaker finds a use on dumps or in quarries where shafting is not available.

§ 913. THE SAMSON MANUFACTURING COMPANY [23] makes a breaker for which they claim large capacity, uniformity of size in crushed product, freedom from choking, and economy in power. This breaker is shown in Fig. 562. The

main frame (1) is cast in one piece, giving the required strength and rigidity. The jaw (2) is hung at its upper end directly upon the heavy eccentric driving-shaft (3) which is journaled to the main frame. The lower end of the jaw is connected by two steel tie-bars (4) passing through two oscillating journals (5) to the forward end of the frame, as shown. As the jaw moves down, it is drawn forward by the action of the tie rods and recedes on the up stroke, releasing the material.

The machine is furnished in four sizes as shown in Table 412.

TABLE 412.—SIZES, CAPACITIES, HORSE-POWER, ETC., OF SAMSON BREAKERS.

	Jaw Opening. Inches.	Horse-power.	Size of Pulley. Inches.	Speed. Revolutions per Minute.	Capacity. Tons per Hour to 1 Inch.	Weight. Pounds.
No. 1	4x 6	3	20x 4	300	1 to 1½	2,000
No. 3	7x11	6	24x 7	250	5 to 7	7,500
No. 4	7x16	10	30x10	250	10 to 15	10,000
No. 0	.....	For Laboratory.	.....	.....	.....	.....

It should be noted that in the case of the Samson breaker the direction of rotation is of importance. The power should be so applied as to rotate the fly-wheels in the direction shown on the cut; otherwise the crushing force acts in an upward direction, tending to push the front plate up and throwing the machine out of balance. In one mill which came to the author's attention recently, a considerable amount of trouble was experienced with one of these machines, due to its being set up so as to run in the wrong direction. The vibration was so great as to make it impossible to keep nuts tight, the boxes required rebabbitting twice within a single month, jaw plates broke after running but a short time, and this in spite of the utmost care. Finally it occurred to some one that the direction of rotation was wrong. This was changed by crossing the belt to the counter-shaft and no further trouble was experienced. Upon inquiry it was found that three other mills in the same district using Samson breakers were having similar troubles, and that in each case the direction of rotation was wrong.

At the Dives-Pelican Mine at Silver Plume, Colorado,[24] where they are using one of the No. 4 breakers, the power required to break an average of 10 tons an hour, with a maximum opening of about ¾ inch, was between 5 and 6 horse-power. This test was made with electric drive. In another instance a No. 1 breaker was breaking 3 tons per hour of an iron-bearing zinc ore. The product going to this breaker had been previously run through a 7 × 10-inch Blake breaker opened to about 4 inches, the fines having been screened out before the product was fed to the Samson breaker. The Samson breaker was set to crush to ⅝ inch.

The No. 0 breaker has a capacity of 1,000 to 1,500 pounds per hour when run 300 revolutions per minute with maximum opening of ¼ inch. This is on hard quartz. The power required is approximately 1 horse-power.

§ 914. THE NATIONAL DRILL AND MANUFACTURING COMPANY [19] makes a sectional breaker designed to do the same work as a regular breaker. This is so constructed that no part weighs over 300 pounds. This 8 × 15-inch breaker has a capacity of 9 to 14 tons per hour. It requires from 10 to 12 horse-power to operate and weighs approximately 7,300 pounds.

§ 915. THE DENVER ENGINEERING WORKS COMPANY [10] manufactures Blake ore breakers of the capacities shown in Table 413.

§ 916. THE AMERICAN CONCENTRATOR COMPANY,[5] manufactures a breaker of the Blake type known as the New Century Blake breaker. These have

steel eccentric shafts of large diameter and are self-oiling by means of a chain running in an oil cup hollowed out of the bearing beneath them. Wright's patent Arctic bumper or pitman is exclusively used with these breakers. This eccentric bumper is hollowed out above the eccentric shaft and is water-cooled, which allows the machine to be run continuously at 300 to 400 revolutions per minute. The wedge block at the rear is about twice as long as that of any other make and is held in position by a bridge spanning the bed. This enables the jaws to be entirely worn out without changing the toggle plates. The bridge furnishes a breaking piece when a hammer head gets into the mechanism. False removable side or cheek plates are used, and chilled-iron jaws of best cold-blast charcoal-iron are provided.

TABLE 413.—SIZES, CAPACITIES, ETC., OF BLAKE BREAKERS MADE BY DENVER ENGINEERING WORKS COMPANY.

Size of Jaw Opening. Inches.	Capacity in Tons per Hour to Sizes Stated.								Size of Pulley. Inches.	Revolutions per Minute.	Horse-power Required.
	Tons.	Inches.	Tons.	Inches.	Tons.	Inches.	Tons.	Inches.			
7x10	5.0	2	4.0	1½	2.5	1	1.5	¾	26x 7½	300	8
9x15	12.0	2½	10.0	2	8.0	1½	6.0	1	30x10½	300	15
11x18	20.0	3	17.5	2½	15.0	2	10.0	1½	36x10½	300	20

§ 917. THE DENVER FIRE CLAY COMPANY,[11] makes a machine known as the Case laboratory breaker (see Fig. 563) for which they claim great strength and capacity. One advantage of this laboratory breaker is the ease with which it may be cleaned. Two or three turns of a hand wheel at the front end of the frame allows the fixed jaw plate and adjustment shims to be lifted out. The movable jaw and plate can then be raised and swung back for cleaning. Special shims are inserted between the fixed jaw plate and frame, furnishing an adjustment for coarse or fine crushing, and allowing a variation between ¼-inch and 20 mesh. The motion of the movable jaw is such as to give the best possible feed and still not cake on soft material. The movable jaw plate is held by one taper head bolt in the center, so that when the lower end becomes worn it can be reversed. The fixed plate is also reversible. Despite the ease with which the machine can be cleaned, there are no loose parts left to rattle.

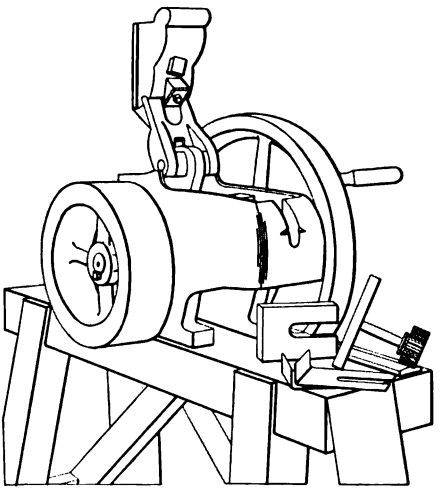

FIG. 563. — THE CASE LABORATORY BREAKER.

The machine is fitted up so as to run by hand or by power. For power the breaker has a pulley 9 inches in diameter with a 2¾-inch face. A speed of 450 to 500 revolutions per minute is recommended for general use. Under these conditions the breaker has a capacity of 50 to 100 pounds per hour depending upon the nature of the material. The jaw opening is 2¼ × 3 inches. All parts are made in exact duplicate so that replacements can be made at minimum expense. The shipping weight is 130 pounds. This breaker is also made in larger size, for power only, for preparing large samples. This has a jaw opening of 3 × 4½ inches and a capacity of 200 to 300 pounds per hour.

§ 918. The Sturtevant Mill Company [25] have recently introduced new roll jaw breakers of the Blake type in which the cam and roller have been substituted for the old pitman and toggle mechanism (see Fig. 564). These machines are especially notable for the low speed at which they run, *i.e.*, 140 to 170 revolutions per minute.

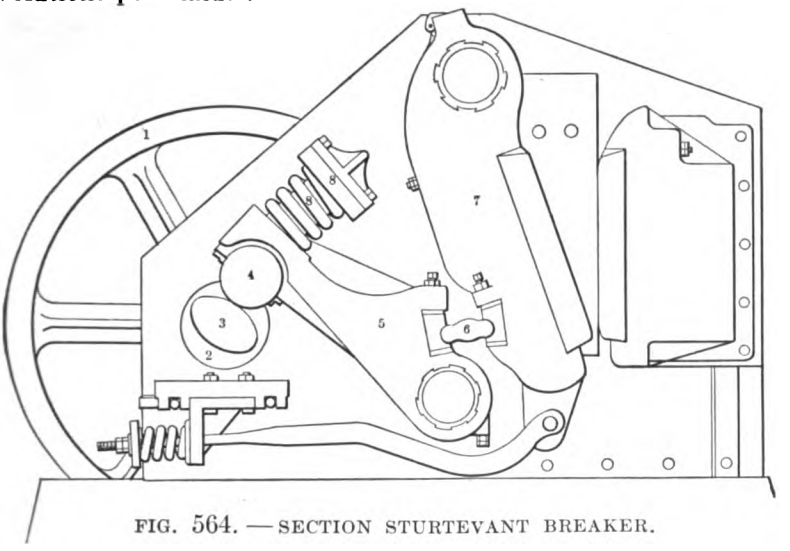

FIG. 564. — SECTION STURTEVANT BREAKER.

Motion is conveyed to the movable jaw as follows: Power is furnished to the driving pulley which drives a shaft (2) provided with fly-wheel (1). Upon this shaft is a cam (3) which by bearing against a roller (4) at one end of an inclined lever (5) furnishes a forward motion which is conveyed to the movable jaw (7) by a simple toggle (6). The inclined lever, being pivoted at its lower end and provided with a spring (8) upon its upper end opposite to the cam side, furnishes motion in the opposite direction to that caused by the action of the cam.

§ 919. The Humboldt Engineering Company [18] manufactures a large variety of breakers for hand power, belt driving, and direct steam power, suited for every sort of crushing problem. Where the tonnage is high the Humboldt Engineering Company recommends gyratory breakers.

(*c*) JAW BREAKERS HAVING THE GREATEST MOVEMENT ON THE LARGEST LUMP.

§ 920. The Sturtevant Mill Company [25] makes breakers of the Dodge type for intermediate crushing. These are too well known to require description, but details of capacity, horse-power, etc., as given in the manufacturers' catalogue, are shown in Table 414.

TABLE 414.—SIZES, CAPACITIES, ETC., OF STURTEVANT, DODGE TYPE, BREAKERS.

Size of Jaw Opening. Inches.	Size of Pulley. Inches.	Horse-power.	Capacity to 1 Inch. Tons per Hour.	Revolutions per Minute	Net Weight Complete. Pounds.
4x 6	4x20	2 to 4	½– 1	250	1,200
6x 6	5x12	3	1 – 2	350	1,200
7x 8	6x16	5	3 – 4	300	2,200
7x10	6x24	4 to 8	3 – 6	250	3,600
8x10	8x24	6	4 – 6	250	4,600
8x12	8x24	7	4 – 6	250	4,600
Special					
9x15	10x30	9	8 –12	250	9,000
11x15	10x36	8 to 12	8 –15	250	10,000

§ 921. THE HUMBOLDT ENGINEERING COMPANY [18] manufactures breakers of the Dodge type for use where a uniform product is desired. These breakers have an eccentric shaft like that of the Samson breaker. The swinging jaw is pivoted below and connected above with the eccentric shaft through a strongly constructed pitman which acts directly upon the upper axle of the swinging jaw. This upper axle is made of steel and is calculated to break, and save the other parts of the machine from rupture should a large piece of iron, through carelessness, fall into the breakers. The jaw faces are made of best

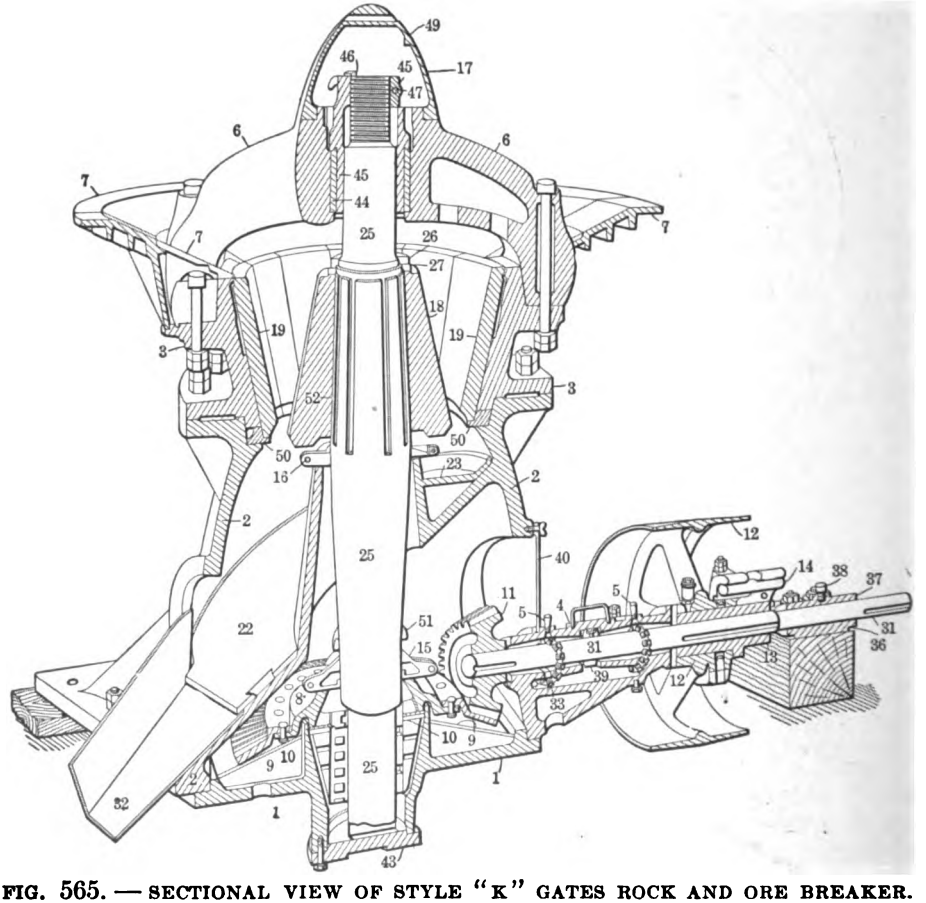

FIG. 565. — SECTIONAL VIEW OF STYLE "K" GATES ROCK AND ORE BREAKER.

chilled iron or hard steel. They can be easily replaced, and may be turned end for end to obtain the maximum wear.

The bottom pivot axle of the swinging jaw is so made as to be readily adjustable, and all bearings have ample provision for protection from dust.

II.— SPINDLE OR GYRATING BREAKERS.

Of these machines, we have here represented, two types.

(*a*) Those which have the greatest movement on the smallest lump.

(*c*) Those which have the greatest movement on the largest lump.

(*a*) SPINDLE BREAKERS HAVING THE GREATEST MOVEMENT ON THE SMALLEST LUMP.

Examples of this type of machine, in addition to those found in Vol. I. of Ore Dressing, are the Gates "K" type, the Austin spindle breaker, the McCully gyratory breaker, and the Kennedy gyratory breaker.

§ 922. GATES STYLE "K" ROCK AND ORE BREAKER. — The latest Gates rock and ore breaker,[2] manufactured by the Allis-Chalmers Company, is designated style "K" to distinguish it from the style "D" and others. A sectional view of the breaker is shown in Fig. 565.

The general principle and design of the breaker is similar to the style "D,"[1] although the machine in minor details has been changed and improved in practically every part. The principal difference between the styles "D" and "K" breakers is in the spider, the hopper, and the support of the shaft.

The spider (6), Fig. 565, in the style "K" breaker, is arched widely over the top of the head (18) and concaves (19), leaving large spaces on either side and underneath, which tend to prevent the bridging of the stone when dumped into the breaker. A piece of any size which can be got into the mouth of the breaker can easily pass underneath the arms of the spider.

The spider rim fits around the outside of the top shell (3), and the hopper (7) extends over the spider to the concaves. The spider rim fitting to the outside of the top shell makes it possible for the top of the spider rim to be flush with the top of the top shell and concaves. With this arrangement the rock entering the breaker does not pass over the spider rim, impeding the flow of material to the crushing surfaces and wearing the rim, but strikes the crushing surfaces immediately on leaving the hopper. This design of spider and concaves also makes it possible to easily remove the concaves from the machine without disturbing the spider.

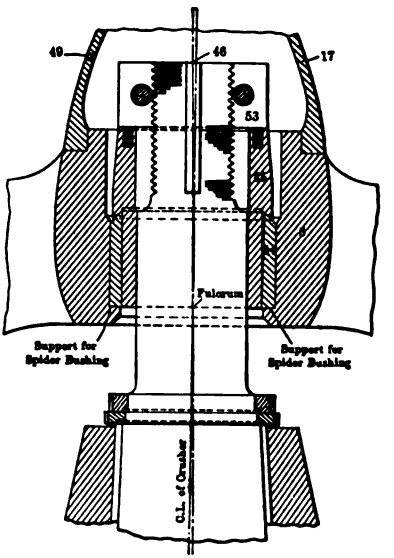

FIG. 566. — HEAD SUSPENSION OF GATES GYRATORY BREAKER.

The shaft (25) in the "K" breaker is suspended from the spider instead of being supported at the bottom plate as it is in the "D" machine. A bushing with spherical top (44), see Fig. 566, is securely fastened in the spider hub. Another bushing (45), having a flange turned spherical to match the top of the bushing in the spider, is fitted around the shaft, the spherical surfaces in the spider bushing and shaft bushing making the supporting bearing.

The top of the shaft is threaded and a large split nut (53) is secured on this threaded portion of the shaft and held in place by means of a gib key (46). The shaft bushing rests against the split nut, which prevents the shaft from dropping. The raising or lowering of the head and shaft is accomplished by removing the dust cap (17), loosening the split nut on the shaft, and screwing it up or down. There are two more key seats cut in the threaded portion of the shaft so that the gib key may make the adjustment as fine as is desirable.

Between the spider and the shaft bushing there is a cavity which, when

kept partly filled with oil, thoroughly lubricates this bearing. Oil is introduced into the cavity through a plugged hole (49) in the dust cap.

The oil bonnet (15), see Fig. 565, and the dust ring (16) in the "K" machine, are made in halves and bolted together, so that they can be replaced without dismantling the breaker. A small oil reservoir is formed in the bonnet and is packed with waste, which is used to lubricate the bearings of the bonnet against the shaft and the seat of the bonnet on the eccentric (8). There is a steel collar (51) shrunk around the main shaft directly over the oil bonnet, which deflects the dust and grit from the joints between the shaft and the oil bonnet.

The range of adjustment of the shaft and head in the style "K" breaker is practically twice as much as in the style "D." It is possible to raise the shaft as high above the crushing point, at which the material discharges from between the head and concaves, as it extends below this point when at its lowest position. This does not give any greater variation in the size of product obtainable from the two machines, but makes it possible to secure greater wear from the head and concaves in the "K" breaker than in the "D."

The other details of the "K" machine are to a great extent the same as in the "D," excepting that several minor changes have been made, such as placing a cast-iron concave supporting ring (50) under the concaves, increasing the slope of the diaphragm to allow a freer discharge, and similar slight changes and improvements suggested by experience with the older types.

The style "K" breaker is manufactured in sizes from the No. 4 up, as shown in Table 415.

TABLE 415.—DIMENSIONS, WEIGHTS, CAPACITIES AND POWER REQUIRED. GATES STYLE "K" BREAKERS.

Size.	Dimensions of Each Receiving Opening.	Weight of Breaker.	Capacity per Hour in Tons, According to Character of Rock or Ore in Tons of 2,000 Pounds to Pass through a Ring of Size Designated Below in Inches.								Smallest Size of Product of Machine.	Dimensions of Driving Pulley.	Revolutions per Minute of Driving Pulley.	Horsepower Required.
	Inches.	Lbs.	1½	1¾	2	2½	3	3½	4	5	Inches.	Inches.		
			Tons.	Tons.	Tons.	Tons.	Tons.	Tons.	Tons.	Tons.				
4.....	8x30	20,900	15	20	25	30	40	.....	.....	.....	1½	32x12	400	14 to **21**
5.....	10x38	31,200	.....	30	40	50	60	70	.....	.....	1¾	36x14	375	22 to **30**
6.....	12x44	45,500	.....	.....	50	70	80	90	.....	.....	2	40x16	350	28 to **45**
7½....	14x52	64,800	.....	.....	.....	80	90	100	120	.....	2½	44x18	350	50 to **75**
8.....	18x68	100,000	.....	.....	.....	.....	.....	130	150	.....	3½	48x20	350	70 to **110**
9.....	21x76	153,000	.....	.....	.....	.....	.....	.....	250	300	4	56x20	300	100 to **150**

§ 923. GATES BREAKER WITH SHORT HEAD AND CONCAVES FOR FINE CRUSHING.[2] —The standard Gates breaker may be fitted with a special type of short head and concaves, so that it is possible to produce with the machine a finer product than if the standard length head and concaves are used (see Fig. 567). With this arrangement the head *A* is made shorter and of larger diameter than in the case of the standard length head. The concaves *B* are also shortened so that the bottom of them will come slightly above the bottom of the head. The discharge point *C*, between the head and concaves, is therefore placed about the middle of the top shell of the machine, and is consequently raised much nearer to the fulcrum point of the shaft.

The fineness to which a breaker may crush depends upon the eccentricity of the shaft at the discharge point between the head and concaves. With the short head and concaves, inasmuch as this discharge point is raised in the machine, the eccentricity is less at this point than in the standard machine, and consequently finer crushing is possible.

In order to maintain the proper crushing angle between the head and concaves, since the short head is larger in diameter at the bottom than the standard, it is also necessary to increase the diameter at the top. This makes the distance between the head and concaves at the top of the machine smaller than with the standard head and concaves, and does not admit of so large material being fed to the breaker.

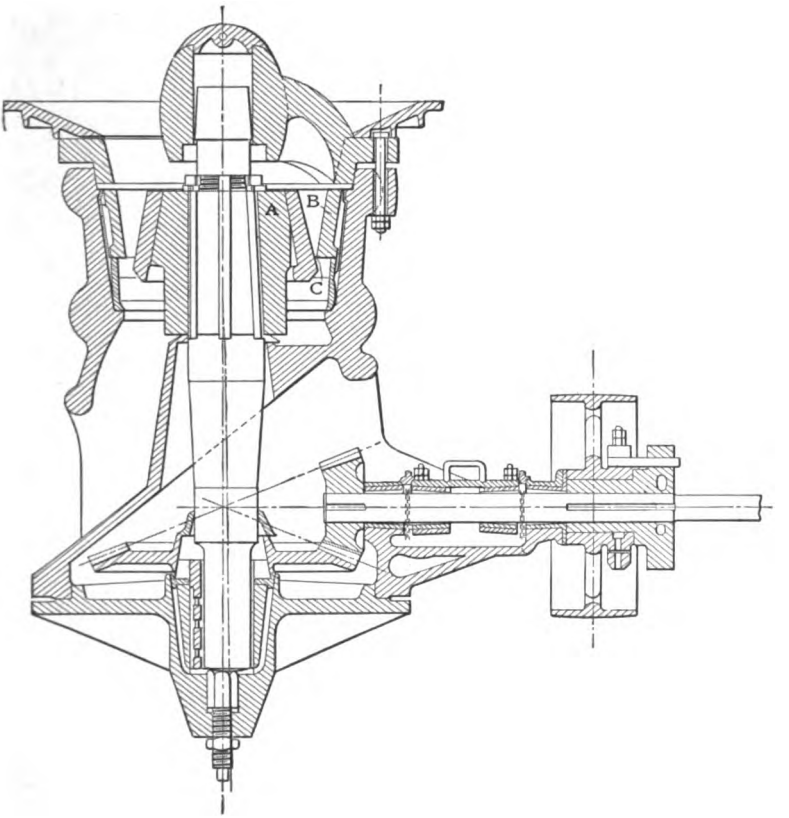

FIG. 567. — GATES BREAKER FITTED WITH SHORT HEAD AND CONCAVES.

This breaker is generally used as a re-crushing machine to take care of oversize product.

Table 416 gives the size of product and capacity of Gates breakers fitted with short head and concaves.

TABLE 416.—SIZES AND CAPACITIES OF GATES GYRATORY BREAKERS FITTED WITH SHORT HEAD AND CONCAVES.

Style.	Size of Crushed Product.	Capacity in Tons per Hour.	Style.	Size of Crushed Product.	Capacity in Tons per Hour.
	Inches.			Inches.	
2 D	$\frac{5}{8}$	4 to 6	5 K	$1\frac{1}{4}$	13 to 19
3 D	$\frac{3}{4}$	6 to 8	6 D	$1\frac{1}{4}$	16 to 20
4 D	$\frac{7}{8}$	8 to 12	6 K	$1\frac{1}{4}$	17 to 22
4 K	1	9 to 13	$7\frac{1}{2}$ D	$1\frac{1}{4}$	18 to 25
5 D	$1\frac{1}{8}$	12 to 18	$7\frac{1}{2}$ K	$1\frac{1}{4}$	18 to 25

§ 924. The Austin Manufacturing Company,[6] makes a gyratory ore and rock breaker which in principle is like the Gates breakers. Certain special advantages are claimed for it by its manufacturers as follows:

1. The breaker is provided with an automatic oiling system which furnishes means of lubricating the eccentric and counter-shaft bearings continuously and thoroughly. This system consists of an oil pump automatically operated by the gyratory movement of the main shaft. Moreover, the oil thrown from the surface of the pinion is caught by the cap and carried back to the lower oil reservoirs.

2. The Austin breaker has a rigid eccentric bearing.

3. After adjusting for wear of head and concaves the breaker will still receive the same sized rock.

4. The counter-shaft is supported upon both sides of the pinion.

5. The full eccentric bearing is preserved when the head is raised.

6. It is thoroughly protected from dirt and grit. These breakers are made in the sizes shown in Table 417.

TABLE 417.—SIZES AND CAPACITIES OF AUSTIN ROCK AND ORE BREAKER.

No.	Dimensions of Receiving Spider Openings.		Capacity per Hour in Tons of 2,000 Pounds Varying with Character of Rock or Ore.		Driving Pulley.			Horse-power for Breaker, Elevator and Screen.	Weight of Breaker. Pounds.
	One Opening. Inches.	Total Opening. Inches.	Tons.	To Pass Diameter Ring. Inches.	Diameter. Inches.	Face. Inches.	Revolutions per Minute.		
2....	8 x22	8 x 44	5– 10	2½	24	8	450	12– 15	10,000
3....	8½x24	8½x 48	10– 20	2½	28	10	425	20– 25	15,500
4....	9 x27	9 x 54	15– 30	2½	32	12	400	25– 30	23,500
5....	12 x35½	12 x 71	25– 50	2½	36	14	375	30– 50	32,000
6....	12½x37	12½x 74	45– 90	3	40	16	350	40– 60	44,000
7½...	14 x44	14 x 88	90–150	3½	44	18	350	75–125	67 500
8....	19 x60	19 x120	130–225	4	48	20	350	100–150	100,000

§ 925. McCully Gyratory Rock and Ore Breaker. — The McCully gyratory rock and ore breaker is manufactured by the Power and Mining Machinery Company.[21] By comparing Fig. 568 with Fig. 34 of Vol. I. it will be seen that the latest McCully breaker differs to a considerable extent from the older form there described.

The following are a few of the special features worthy of note:

The inclined diaphragm of the bottom shell is protected by removable hard iron or manganese-steel wearing plates (50). Side flanges are cast to these plates to protect the shell at the spout opening. The spout is made of heavy plate steel in the small machines. In the larger sizes it is made of chilled iron or manganese steel. The counter-shaft bearing bracket is cast to the bottom shell, and is machined to template to receive the removable bearing (21). The bottom shell (10) is fitted with a large inspection door (12) underneath the diaphragm, through which the gears and eccentric may be observed in operation, and lubricated.

The bottom plate (26) is bolted to the bottom shell and can be dropped to expose the bevel gear (35) and eccentric (25) for repairs. The hub of this plate is fitted with a removable steel bushing (29) and is surrounded by a large annular oil chamber (30) connected to the bottom part of the hub by large channels. This construction insures perfect lubrication for the eccentric and brass wearing ring as they are always entirely submerged in oil.

The gears are made of steel and the wheel is secured to the eccentric by a simple key to facilitate removal.

The counter-shaft bearing (21) is machined to gauge and is removable.

This construction not only makes the bevel pinion more accessible, but also permits of repairs being made to the bearing in the most convenient place. The bearing is fitted with a cap and is babbitted with a special mandrel. The oiling device in this bearing is simple and insures cool running of the countershaft.

The spider (3) is fitted with a removable steel bushing (45) and a tool-steel wearing ring (43).

The shaft (31) is very strongly proportioned, and has fitted to it the crushing head (7) which is pressed on and is kept from rotating by a simple steel key (41), and from working up by two lock nuts (42). The shaft is suspended

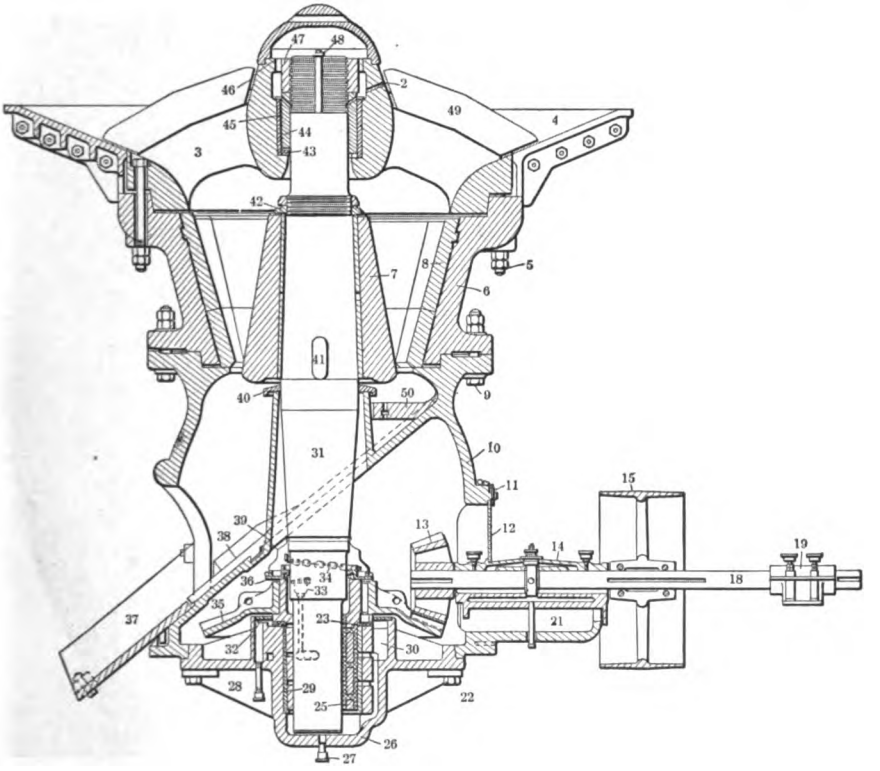

FIG. 568. — SECTIONAL VIEW OF McCULLY GYRATORY BREAKER.

from the spider by a nut (47), and a steel sleeve (44) is interposed between this nut and the wearing ring mentioned above. The point of suspension coincides with the fulcrum of the gyratory movement of the shaft, thus avoiding all sliding motion at the point of great bearing pressure. This construction not only effects a great saving in the power required to operate the machine, but also provides a rolling, in place of a sliding, bearing used in other suspension devices for the shafts. The raising of the shaft for adjusting the size of the product does not alter its inclination, consequently the bearing of the journals is always perfect.

The crushing head is made of chilled iron or manganese steel, and the crushing surface is either smooth or ribbed.

The sizes and capacities of the McCully breaker are given in Table 418.

TABLE 418.—DIMENSIONS, WEIGHTS, CAPACITY AND POWER REQUIRED FOR McCULLY GYRATORY BREAKERS.

Size.	Weight of Breaker in Pounds.	Size of Openings in Breaker. Inches.	Size of Combined Openings. Inches.	Capacity per Hour in Tons of 2,000 Pounds Passing 2½-Inch Ring.	Size of Driving Pulleys. Inches.	Revolutions per Minute of Driving Pulley.	Horse-power of Engine Required.	Smallest Size Product which can be made at One Break. Inches.	Size.
1 . . .	7,100	5x20	5x 40	5– 9	18x 6	600	4– 6	¾	1
2 . . .	10,200	6x25	6x 50	7– 12	20x 8	575	6– 10	1	2
3 . . .	17,000	7x28	7x 56	10– 20	22x10	525	10– 15	1¼	3
4 . . .	23,000	8x34	8x 68	20– 40	28x12	475	12– 20	1½	4
5 . . .	36,500	10x40	10x 80	35– 55	30x14	450	20– 25	1¾	5
6 . . .	48,000	12x44	12x 88	50– 75	34x16	425	25– 40	2	6
7½ . . .	71,500	15x55	15x110	* 75–125	40x18	400	45– 70	2½	7½
8 . . .	108,000	18x68	18x136	*125–175	44x20	375	65–100	3	8
9 . . .	160,000	21x76	21x152	*200–500	52x20	350	100–140	4	9
10 . .	190,000	24x66	24x198	*300–700	52x24	350	125–175	5	10

* Based on product approximating 3-inch, 3½-inch, 4-inch, and 5-inch cubes, respectively. Sizes Nos. 1, 2, and 3 are built, as shown above, with the shell cast in one piece. In all other respects the construction is the same as standard machines.

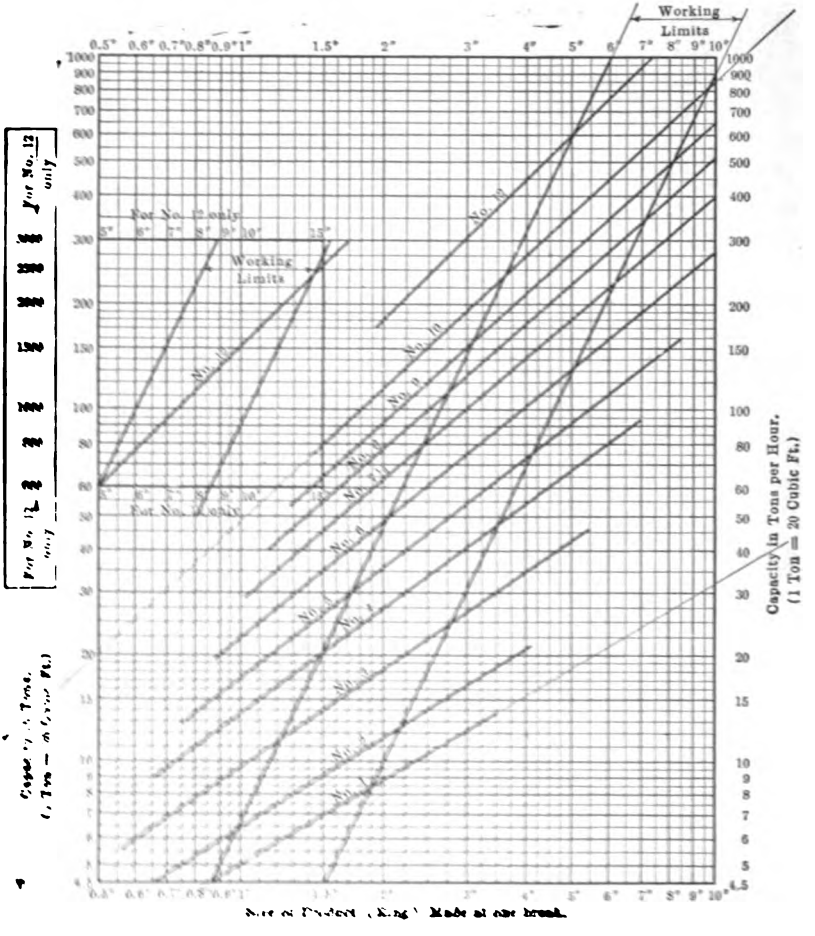

FIG. 369.—DIAGRAM OF CAPACITIES FOR McCULLY BREAKER.

From a large amount of data the manufacturers have constructed the diagram shown in Fig. 569 for giving the capacities of their machines when crushing rock of average hardness. The horizontal dimensions give the size of ring through which the material is crushed at one break, and the vertical dimensions give the tons per hour. If we wish then to find the capacity of a No. 5 McCully breaker crushing through 2½-inch ring, we find the vertical line passing through the abscissa 2½, and follow down until we come to the oblique line No. 5, thence horizontally, and read in the margin 45 tons per hour, assuming 20 cubic feet = 1 ton. A No. 5 McCully breaker in use at mill 139, handles 660 metric tons per 24 hours, equal to about 31 short tons per hour, and breaks very coarse and hard mine ore through 2½ inch, using 13 horse-power.[22]

§ 926. SELF-TIGHTENING MANTLE FOR MCCULLY BREAKER.[21] — It is a well-known fact that manganese steel flows when under extreme pressure. As a result of this, when a manganese-steel head is running on hard rock, no matter how tight the head nuts are screwed down, the head becomes loose. To overcome this difficulty the Power and Mining Machinery Company have devised the mantle type of head shown in Fig. 570.

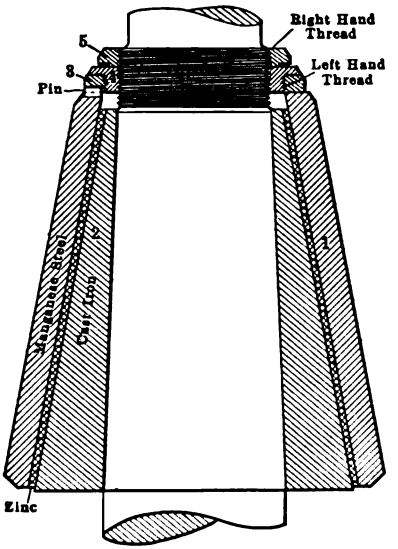

FIG. 570 — MANGANESE-STEEL MANTLE FOR MCCULLY BREAKER.

The outside, or mantle (1), is made of manganese steel. This mantle fits over a core, or center (2), made of cast iron and secured to the shaft in the same manner as an ordinary head. The space between the mantle (1) and core (2) is filled with zinc.

The automatic tightening of the mantle is accomplished by the special head nuts which are furnished with breakers fitted with mantles. The nuts are made of three separate pieces and the outside part of the lower nut (3) is pinned to the top of the mantle. There are two kinds of threads on these nuts, the outside lower nut having a left-hand thread and the two inside nuts (4) and (5) having right-hand threads. If there is a tendency for the mantle to get loose, it immediately works around on the head center, but inasmuch as it is pinned to the outside lower nut this twisting motion is imparted to the nuts through the pin. If the motion is clockwise, the right-hand thread comes into action and forces the mantle down against the head center. Since this center has a taper fit on the shaft as well as on the outside where the mantle bears, both the mantle and head center are forced down, and any looseness is immediately taken up. If the motion when rotating is counter-clockwise the left-hand thread operates, the result being the same as with the right-hand thread described above.

§ 927. CHALMERS AND WILLIAMS [9] make a gyratory breaker known as the Kennedy gyratory breaker. This breaker is of the top suspension type. A cut showing the various parts is given, and also Table 419 with sizes, dimensions, and power required for same. For cut see Fig. 571.

TABLE 419.—SIZES, DIMENSIONS, WEIGHTS, CAPACITY AND POWER REQUIRED FOR KENNEDY GYRATORY BREAKER.

Size.	Weight of Breaker in Pounds	Size of Openings in Breaker. Inches.	Size of Combined Openings. Inches.	Capacity per Hour in Tons of 2,000 Pounds Passing 2½-Inch Ring.	Size of Driving Pulley. Inches.	Revolutions per Minute of Driving Pulley.	Horse-power of Engine Required.	Smallest Size Product which can be Made at One Break. Inches.
1 ...	6,800	6 x22	6 x 44	5– 10	18x 6	600	4– 6	¾
2 ...	10,000	7 x26	7 x 52	6– 10	20x 8	575	7– 14	1
3 ...	15,500	8 x30	8 x 60	10– 20	22x10	525	10– 15	1¼
4 ...	22,500	9 x35	9 x 70	22– 42	28x12	475	12– 20	1½
5 ...	36,000	11 x41	11 x 82	35– 60	30x14	450	20– 25	1¾
6 ...	49,000	12½x45	12½x 90	50– 80	34x16	425	25– 40	2
7½ ..	70,000	15 x56	15 x112	* 75– 125	40x18	400	45– 70	2½
8 ...	106,000	19 x69	19 x138	*125– 200	44x20	375	65–100	3
9 ...	159,000	22 x77	22 x154	*200– 500	52x20	350	100–140	4
10 ...	210,000	25 x67	25 x200	*300– 700	52x24	350	125–175	5
12 ...	360,000	36 x87	36 x261	*600–1600	64x28	300	175–225	12

Sizes 1, 2, and 3 are made with shell in one piece.

* Based on product approximating 3 inches, 3½ inches, 4 inches, 5 inches, 12 inches, respectively.

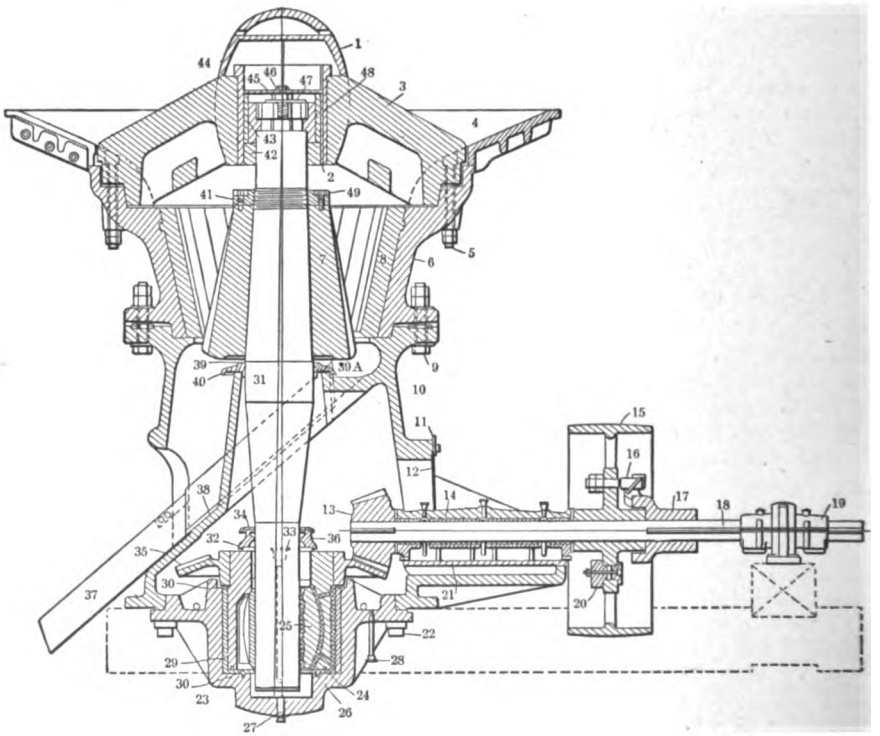

FIG. 571.—SECTIONAL VIEW KENNEDY GYRATORY BREAKER.

KEY TO FIG. 571. KENNEDY GYRATORY BREAKER.

1. Spider cap.
2. Adjusting nut key.
3. Spider.
4. Hopper.
5. Bolt.
6. Top shell.
7. Head.
8. Concaves.
9. Bolt.
10. Lower shell.
11. Door pin.
12. Door.
13. Bevel pinion.
14. Inner bearing cap.
15. Band wheel.
16. Breaking pin.
17. Clutch hub.
18. Counter-shaft.
19. Outboard bearing.
20. Counter-weight.
21. Counter-shaft bearing.
22. Bolt for bottom plate.
23. Steel wearing ring.
24. Eccentric sleeve.
25. Eccentric.
26. Bottom plate.
27. Drain plug.
28. Overflow pipe.
29. Steel bushing.
30. Oil chambers.
31. Main shaft.
32. Lower dust plate.
33. Oil cup.
34. Lower dust cover.
35. Bevel wheel.
36. Lower packing ring.
37. Discharge spout.
38. Wearing plates.
39. Upper dust cover.
39A. Upper packing ring.
40. Upper dust plate.
41. Lock nut.
42. Adjusting nut.
43. Suspension ring.
44. Sleeve.
45. Dust cover.
46. Locking key bolt.
47. Locking key.
48. Bushing.
49. Lock nut pin.

The most important advantages claimed for this breaker are: The hopper so encircles the top of the breaker that it is unnecessary to detach it when it is desired to remove the spider, concaves, main shaft, or crushing head. The spider is a massive two-armed casting arched to permit of the rock or ore passing freely from one side to the other, which ensures even feed on both sides of the head. The head and shaft are made to template and the head is held down by a nut to keep it from moving upward on the main shaft. This makes it unnecessary to pour in zinc to hold it on or to use giant powder to remove it. Ample protection against dust. The eccentric is run in an oil bath. The machine has a ball and socket, self-aligning eccentric.

§ 928. THE FRIED. KRUPP GRUSONWERK [14] manufactures spindle or gyratory breakers of which a cut is shown, Fig. 572. In the breakers the crushing shell is provided with two superposed liners of hard steel *h* and *i*. The crushing head, which is also made of hard steel and mounted on a vertical spindle, is secured to a cast-iron core. Instead of the oscillating box employed for other constructions, a sliding bearing *c* is provided in which the spherical head of the spindle moves like a joint.

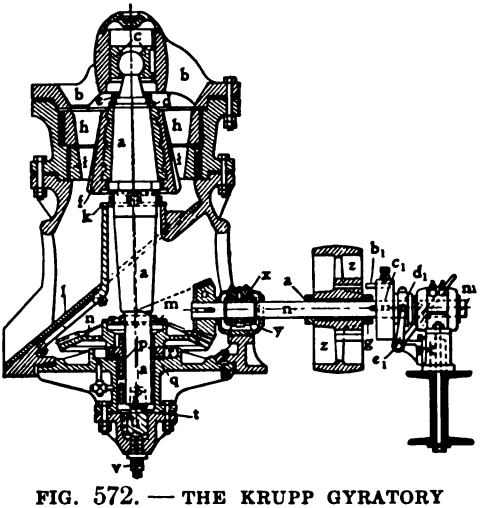

FIG. 572. — THE KRUPP GYRATORY BREAKER.

The discharging chute for the broken material is covered with replaceable iron plates *l*, after the removal of which the driving parts are also accessible from that side. The width of jaw opening of the breaker can be adjusted within certain limits by raising and lowering the step bearing of the spindle by means of adjusting screw and jam nut. The bearings of the driving shaft are adapted for ring lubrication.

For dimensions, power required, output, etc., see Table 420.

TABLE 420.— DIMENSIONS, POWER REQUIRED, CAPACITY, WEIGHTS. FRIED. KRUPP GYRATORY ROCK BREAKER.

Size. No.	1	2	3	4	5	6	7	8
Size of each Feed Opening, Inches	5x18	7x22	7x24	8x27	12x34	12x35	14x44	18x62
Diameter of Pulley, Inches	19½	23½	27½	31½	35½	39½	45½	51½
Width of Pulley, Inches	7½	8½	10½	12½	14½	16½	18½	20½
Revolutions of Pulley per Minute	475	450	425	400	375	350	350	350
Power Required for Medium Strain, Horse-power	8 to 10	12 to 15	16 to 20	20 to 30	30 to 40	40 to 60	60 to 100	100 to 150
Output per Hour of Crushed Rock to 2½ Inches (60 mm.), Tons	3.5 to 6	6 to 12	10 to 20	15 to 30	25 to 50	30 to 60	60 to 100	100 to 150
Weight, Pounds	6,600	9,900	16,500	25,900	35,200	48,400	74,200	110,000

(*c*) SPINDLE BREAKERS WHICH HAVE THE GREATEST MOVEMENT UPON THE LARGEST LUMP.

§ 929. THE C. L. HATHAWAY GYRATORY ROCK AND ORE BREAKER [16] is manufactured by the C. L. Hathaway Rock Crusher Company.

Unlike other gyratory breakers, the Hathaway breaker has the eccentric at the top (see Fig. 573).

The base (1) serves to support the balance of the machine, and contains the fulcrum and means for elevating the gyrating shaft.

Above the base, and attached to it by means of bolts, is the mortar (2) in which the crushing takes place and which is provided with a replaceable

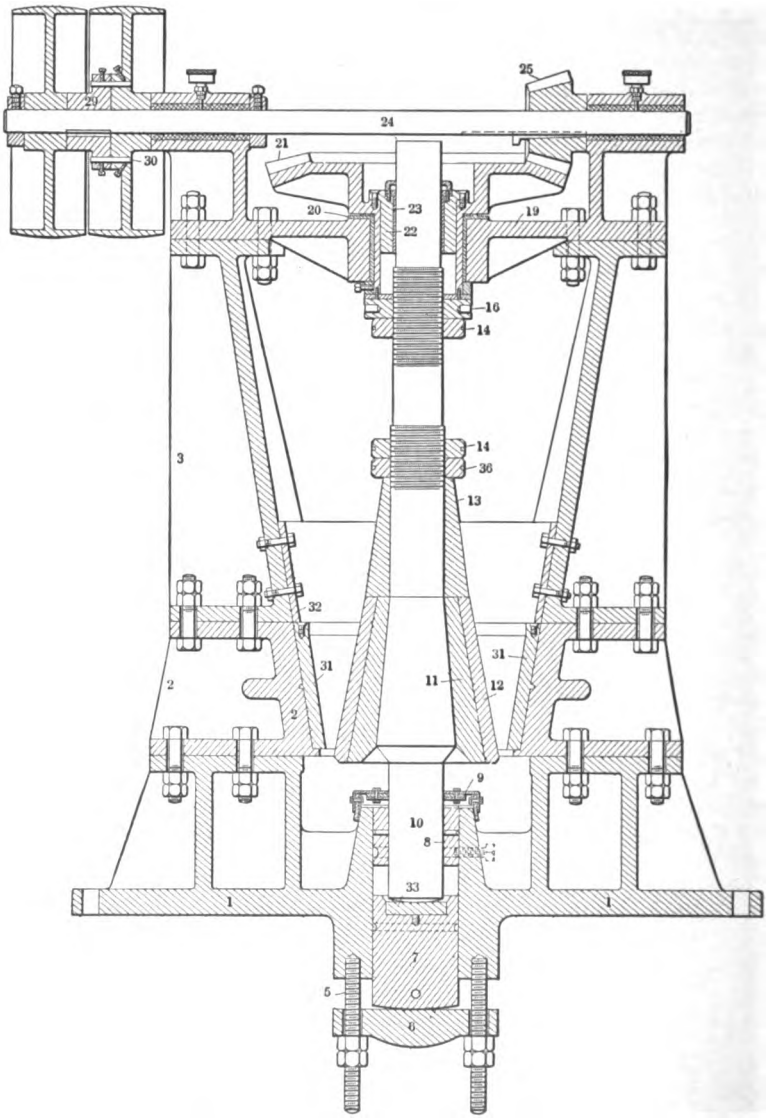

FIG. 573. — THE C. L. HATHAWAY GYRATORY BREAKER.

lining to take the wear. This lining, corresponding to the concaves of other gyratory breakers, is of chilled cast iron or manganese steel. Attached to the mortar and serving to connect it with the spider above are the spider supports (3).

Rotating within the spider at the top of the breaker is the bevel gear (21) running on a loose bronze ring, which acts as an anti-friction bearing and

serves to keep the gear teeth in proper mesh. The bevel gear has a quill extending downward in which the eccentric is placed. The eccentric (22) is lined with a bronze bearing (23) which can be easily replaced. By this construction the quill of the bevel gear becomes the outer surface of the eccentric and revolves in the bronze bushing. The gear has a bearing (20) also readily replaceable. The counter-shaft (24) is carried horizontally in bearings upon the spider, and its arrangement secures a perfect driving mechanism without recourse to any outboard bearing. The counter-shaft also carries the safety pin hub (29) keyed to the counter-shaft and connected by safety pin bolts (30) to the driving pulley which is loose on the shaft. This furnishes a cheap and easily replaceable part.

Arranged to move vertically in the center of the base is the lighter plug (7), through the medium of which the crushing shaft is raised or lowered to regulate the size of product. The crushing shaft button (33) is let into the upper end of the lighter plug to offer a hard and durable surface to carry the crushing shaft.

The lighter bar (6) forms the bottom support for the lighter plug and is raised and lowered by means of the lighter studs (5).

The spider (19) at the top of the machine carries the bevel gear and eccentric, also counter-shaft (24) with its bevel pinion (25) and pulleys to which the power is applied.

Within the breaker, and extending almost the entire distance from top to bottom, is the gyrating shaft (10) journaled in the eccentric at the top and in the lower bushing in the base.

The lower bearing (8) for the shaft is a bronze bushing, making a good bearing and permitting easy renewal. Above this lower bearing or fulcrum there is provided a dust cap (9) which prevents grit from getting into the working parts below.

The head (11) is of ordinary gray cast iron and remains on the shaft at all times, while the mantle, the replaceable part (12), is of chilled cast iron or manganese steel. Above the head and mantle, holding them in place and serving to protect the shaft, is the shaft protector (13) forced down and held in place by the head thrust collar (36) and head lock nut (14). No molten zinc or other metal is used in attaching the mantle, therefore the operation of removing and replacing it is much simplified.

Above the head thrust collar and head lock nut, and immediately under the spider, are the thrust-bearing collar (16) and thrust-bearing lock nut (14).

The hole through the base, in which the lighter plug works, is made large so that by blocking up the head within the breaker, the shaft can be lowered entirely through the machine.

The sizes, capacities, etc., are given in Table 421.

TABLE 421.—SIZES, CAPACITIES, ETC., OF HATHAWAY GYRATORY BREAKERS.

Size.	Weight.	Width of Receiving Opening.	Size of Smallest Product.	Capacity of Smallest Product per Hour.	Size of Largest Product	Capacity of Largest Product per Hour.	Dimensions of Driving Pulley.	Revolutions of Driving Pulley.	Maximum Power Required.
	Pounds.	Inches.	Inches.	Tons.	Inches.	Tons.	Inches.	Per Minute.	Horse-power
5½	4,200	5½	¼	0.75	1½	10 to 15	20x 6	600	6
6½	6,500	6½	5/16	1.50	1¾	15 to 25	22x 6½	575	8
7½	8,600	7½	3/8	2.00	2	20 to 35	24x 7½	550	10
8½	12,000	8½	7/16	3.50	2¼	25 to 65	26x 8	525	20
10½	15,500	10½	½	4.60	2½	50 to 120	28x 9	500	40
12½	23,100	12½	5/8	8.15	3	100 to 175	32x10	475	60
15	30,700	15	¾	16.25	3¾	150 to 250	38x12	450	80

§ 930. Range of Adjustment of Gyratory Breakers.—The Power and Mining Machinery Company [21] states that a gyratory breaker cannot be adjusted to vary the size of product more than $\frac{1}{8}$ inch. If more variation is desired a different head must be put in the machine or the thickness of the concaves must be changed. Fig. 574 shows at *A* the kind of wear that takes place on the head when the breaker is run for any length of time without adjusting. As soon as this wear has increased the opening so that the product is too large, and it is attempted to raise the head to reduce the size of the product as at *B*, the machine will become choked because the angle of nip is too great and the particles cannot discharge from the breaker.

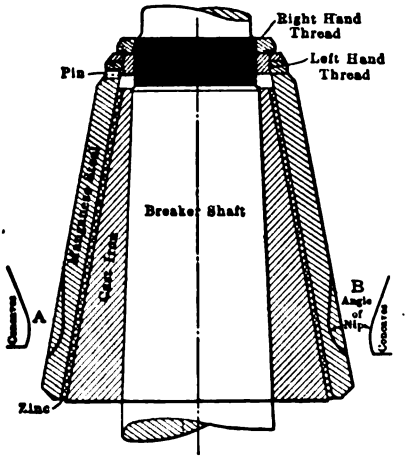

FIG. 574.—SKETCH SHOWING FALLACY OF LARGE RANGE OF ADJUSTMENT FOR GYRATORY BREAKERS.

For this reason the modern gyratory breaker is made with less adjustment, the means of adjustment which is provided being designed to take care of slight wear on the bottom edges of the concaves. If good results are to be obtained from the breaker the head must be lifted a little every week so as to prevent the forming of a flange with an angle of nip so great that choking will result when the shaft is next adjusted.

There is no demand for a machine that can reduce the rock only to sizes between one and four inches. Most of the breakers are expected to crush the rock as fine as possible in one operation. Experience has shown that the limit of the ratio of reduction is 6 to 1; in other words, a breaker having a feed opening 18 inches wide can produce a 3-inch product. With some rock it is possible to increase this ratio to about 7 to 1, but if finer crushing is attempted the strain on the machines is so enormous that they would have to be built much heavier than is now the practice. The reason for this can readily be seen by following the rock as it enters the mouth of the breaker and is finally discharged. The big pieces break into a number of fragments the moment they are gripped by the head. These fines drop down, and the space at the discharge point soon fills up. Therefore the number of points of contact of the rock is increased very rapidly; and the machine is soon filled up with material which is all fine enough to be discharged, but cannot fall down because of the small discharge opening, hence the strains on the machine. In some respects this action is the same as when crushing with rolls. With these machines the ratio of reduction should never exceed 4 to 1, as the speed of crushing is much greater in the roll than in the gyratory breaker.

In the iron mines of Michigan a large number of gyratory breakers are used, and it has been found that the most economical setting of the breaker is when the discharge point on the head is exactly opposite the discharge point on the concaves. When such is the case, there is no obstruction to the free discharge of the ore. The crushed product can vary within considerable limits, and therefore the head is run until the product becomes too large, when a new head of a larger size is put in without disturbing the concaves. After this head is worn so that the rock is too large new concaves are set in with the second head.

§ 931. Size of Crushed Product.—Fig. 575 shows a diagram in use by

the Power and Mining Machinery Company [21] for determining the size of breaker products. This diagram is the result of a large number of careful tests. The assumption is made that 15% of the crushed product will be coarser than the setting of the machine. The vertical dimensions give the sizes of screen or ring and the horizontal dimensions the percentages. If, for instance, the machine is set for 3-inch product and we wish to find out how much 2-inch material is in the crushed product, we follow the horizontal line opposite 3-inch

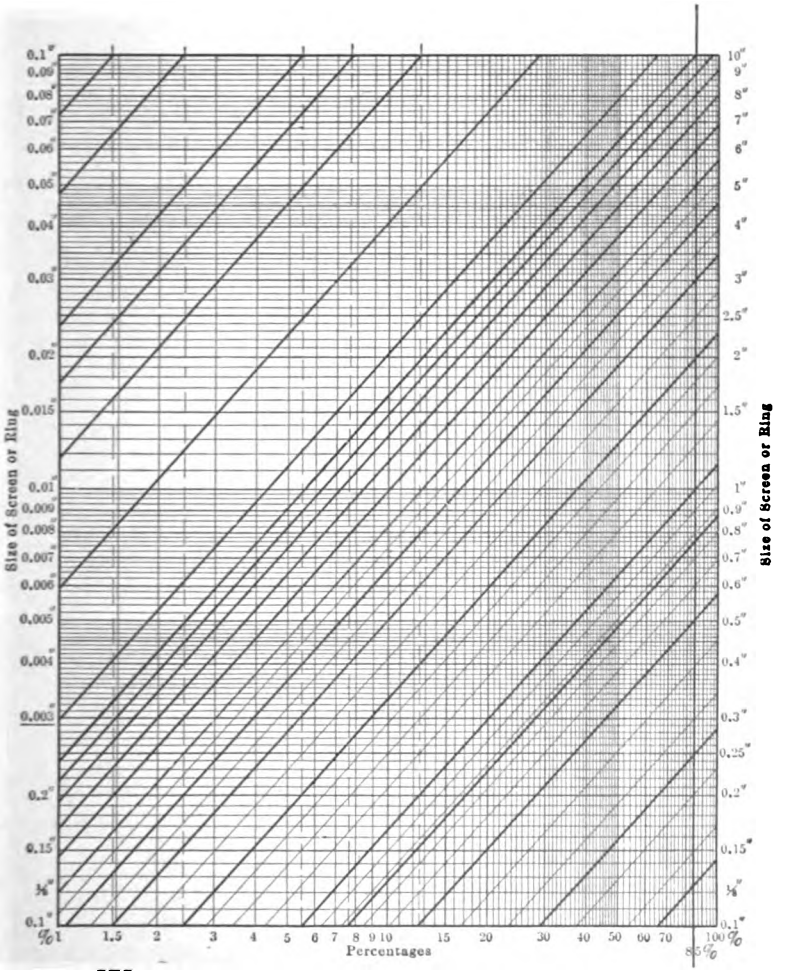

FIG. 575. — DIAGRAM SHOWING SIZE OF CRUSHED PRODUCT.

until it intersects the vertical representing 85%. The nearest diagonal from this intersection is then followed downward. The intersections of this diagonal with the horizontals representing the size of product, if followed down vertically, give the percentages. In the example we find that out of the product 52% will be 2-inch and smaller, 23% will be 1-inch and smaller, etc. For the fine sizes the diagram has been transferred to the upper left-hand corner and continued. The Power and Mining Machinery Company states that for fine sizes the diagram is not absolutely reliable, as they have not had enough

data to check it; but that for the sizes from 6-inch to ½-inch it has been found to agree well enough for all practical purposes with the results actually obtained in practice.

Materials for Wearing Parts.

§ 932. For jaw breakers the Farrel Foundry and Machine Company[13] recommends materials for the various wearing parts as follows: Toggles of best charcoal chilled iron, toggle bearings of best open-hearth steel, jaw plates of chilled charcoal iron for crushing ordinary rock, but manganese-steel plates for hard rock and ore, and cheek plates of high-grade open-hearth steel that is tough and hard to withstand the wear, and at the same time is not brittle. The American Concentrator Company[5] uses chilled-iron jaws of best cold-blast charcoal iron, unless high carbon, manganese, or other special steels are specified. The Yagle Foundry and Machine Company[27] equips their Blake breakers with chilled-face iron jaw plates.

With regard to wearing parts for spindle breakers the Austin Manufacturing Company[7] states that for breaking limestone and all soft rock, ordinary chilled heads and concaves made of the best quality of gray iron will last almost indefinitely, while upon highly refractory ores or quartz the same parts will wear out in a very short time. The same is true when it comes to crushing granite, trap rock, hard heads, etc. They state, furthermore, that they have found from experience that manganese steel has the longest life on the most difficult crushing propositions. Manganese steel, however, will not withstand the wear in crushing the granite found in the vicinity of Devils Lake, Wisconsin, in and about Pipestone, Minnesota, and Sioux Falls, South Dakota. In these cases chilled-iron parts with smooth surfaces have been found most serviceable, but the expense for renewals is very heavy.

Allis-Chalmers[2] give some interesting data concerning Gunlock manganese-steel mantles as follows:

§ 933. *Gates Gunlock Manganese-Steel Mantle and Cast-Iron Head Center.*[2] — Practically all of the wear on the crushing head of a breaker takes place at the extreme bottom of the head. A head may not be worn to any extent at the top, and although only a comparatively small portion of the bottom is worn away, when using a solid manganese-steel head, nevertheless it is necessary to replace the entire head.

The mantle and cast-iron head center shown in Figs. 576 *a* and *b* and 577 *a* and *b* has been designed to avoid this waste of material. With this arrangement the cast-iron head center (1) is attached to the shaft of the machine in the same manner as the regular chilled-iron head. The outside of the center is machine finished.

The manganese-steel mantle (2) is ground on the inside to fit perfectly over the head center so that it can turn upon it. At the bottom of the mantle, extending inwardly, there are two lugs (3). The center is slotted on two sides to allow the lugs to pass over it when the mantle is put on. The bottom of the head center where the lugs of the mantle come in contact with it has a double spiral surface, which forms a gunlock, so that any turning of the mantle tends to tighten it on the head center.

With this arrangement, when the breaker head is worn, it is not necessary to replace the entire head; all that is required is to remove the manganese-steel mantle from the head center and place a new mantle over the old head center, which materially lessens the cost of replacement of the head, the mantle being very much lighter than a solid head and the cost of manganese steel being very high. Moreover, the labor required to put a new mantle over the head center is much less than if a worn head had to be taken off the shaft and a new one keyed on.

Any looseness of the mantle which develops, due to expansion and strain of the metal, is immediately and automatically taken up by the creeping of the mantle on the head center. The head center, once attached to the shaft, becomes a fixture and does not need to be removed every time a new mantle is put in place.

§ 934. *In the jaw breakers manufactured by the Fried. Krupp Grusonwerk* [14] the parts subjected to wear and tear, viz., breaking jaws, cheek plates, and toggle plates, are made of chilled cast iron. This material has the advantage of being very hard to a certain depth and then gradually softer. The hard part therefore bears practically on an elastic support, whereby a great resistance is attained. If desired, the breaking jaws may be made of manganese steel. These jaws are made considerably lighter than cast-iron breaking jaws and are reinforced by ribs. They are also made in two or three sections, so

FIG. 576*a*. — SECTION OF CAST-IRON HEAD CENTER.

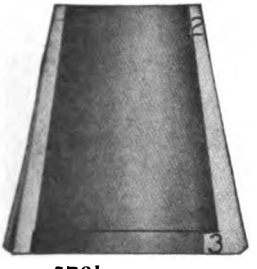

FIG. 576*b*. — SECTION OF MANTLE.

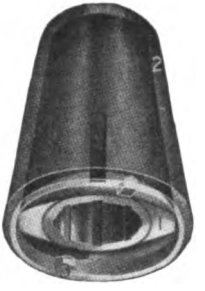

FIG. 577*a*. — GATES MANGANESE-STEEL MANTLE SHOWING METHOD OF ATTACHMENT.

FIG. 577*b*. — BOTTOM VIEW.

that when the bottom piece becomes worn it is interchanged with the next one above. The cost per pound for hard steel breaking jaws is higher than that for cast-iron breaking jaws, but as the former are much lighter than the other, the price per piece is approximately the same for both kinds.

§ 935. LIFE OF WEARING PARTS. — The life of wearing parts depends not only on the nature of the ore but also upon the handling of the breaker. It is not necessary to fix the jaws in the breaker by means of screws, but the space behind the jaws should be filled with hard lead or zinc.

Table 422 gives the details as to life, etc., of the wearing parts of a Blake breaker, 6 × 20-inch mouth opening, in use at Mill 139.[22] This Blake breaker was made by the Farrel Foundry and Machine Company and is used in crushing very hard rock from 2½ to 1½-inch in size to 1¼-inch size. The present capacity is 400 tons per 24 hours, 9 horse-power being used. Table 423 gives

similar data with reference to a No. 5 McCully gyratory breaker in use at the same mill.

TABLE 422.—WEARING TABLE, BLAKE BREAKER.

Wearing Part.	Material.	Total Weight in Pounds.		Actual or Estimated Maximum Life.		Wear per Ton in Pounds.		Cost Cents per Pound. New.	Sells Cents per Pound. Old.	Cost per Ton in Cents.		Remarks.
		New.	Old.	Days.	Tons.	Gross.	Net.			Gross.	Net.	
Fixed Jaw plate	Manganese Steel.	1660	1385	135	56,600	.0293	.00486	13.15	0.68	.386	.372	5 changes.
Swing Jaw plate	Manganese Steel.	1340	1128	135	56,600	.0234	.00378	13.15	0.68	.311	.298	4 changes.
Fixed Jaw plate	Canda Steel.	323	274	19	10,400	.03105	.00471	10.5	0.68	.326	.308	1 change.
Swing Jaw plate	Canda Steel.	293	247	19	10,400	.0282	.00442	10.5	0.68	.296	.294	1 change.
Babbitt for Pitman.	Good Quality Babbitt.	22	0	90	47,500	.000462	.000462	45.0	0	.0208	.0208	1 change.
Toggles	Cast Iron.	70	70	.....	.....	0	0	7.2	0.68	0	0	Wear not appreciable.
Toggle bearing	" "	26	0	180	96,000	.000271	.000271	4.3	0.68	.00116	.00098	
Set Cheek Plates	Steel.	63	30	135	56,600	.00111	.000584	8.75	0.68	.00972	.00937	
Tension Rod	"	51	0	130	57,920	.000883	.000883	8.0	0.68	.00702	.00642	

TABLE 423.—WEARING TABLE, McCULLY GYRATORY BREAKER.

Wearing Part.	Material.	Weight in Pounds.		Life. Days.	Wear per Ton. Pounds.	Cost per Pound. Cents.	Sells for Cents per Pound. Old.	Net Cost per Ton. Cents.
		New.	Old.					
Head	Manganese Steel.	2,165	2,000	170	0.002365	6.95	0.68	0.1965
Head	Chilled Iron.	2,165	1,545	160	0.02115	4.30	0.68	0.2815
Set of Concaves	Manganese Steel.	2,079	1,400	345	0.00638	6.2	0.68	0.1125
Babbitt for Eccentrics	Good Quality Babbitt.	116	0	107	0.00274	45.0	0	0.120
Eccentric Wearing Rings	Phosphor-bronze.	21	10	160	0.000375	33.0	16.5	0.0181
Safety Pin	Cast Iron.	70	0	170	0.001005	11.0	0.68	0.010375

§ 936. Costs. — Figures concerning costs are hard to obtain, costs being so absolutely dependent upon the special conditions under which the crushing is being done. The Farrel Foundry and Machine Company [13] computes the cost of crushing at 10 cents per ton and under, according to the quantity being crushed, the material being understood to be hard rock or ore.

Allis-Chalmers [2] state with regard to costs that they know of one plant where a hard limestone is being crushed at a cost of 19 cents per cubic yard in the cars, while in other plants the cost runs as high as from 35 to 40 cents for the same work. This presumably includes the cost of mining. At Mill 162,[15] the cost for several years of crushing 800,000 tons yearly has been in the neighborhood of 3 cents per ton, about one-third of which has been consumed by renewals and the remainder by labor charges. Apparently the cost of power is not included, but this could hardly add more than 0.0025 cent per ton to the cost as given.

Bibliography for Rock Breakers.

1. Allis-Chalmers Company, Milwaukee, Wisconsin. Bulletins 1415 and 1422. Description Gates Rock and Ore Breakers, Style "D."
2. *Ibid.* Private communication describing Gates Rock and Ore Breaker, Style "K," statements as to costs of breaking, wear, etc.
3. *Ibid.* Instruction Book No. 5002. Instructions for Setting and Operating Style "K" Gates Rock and Ore Breaker.
4. *Ibid.* Catalogue No. 110. Gates Rock and Ore Breakers.
5. American Concentrator Company, Joplin, Missouri. Bulletin No. 10. Description of New Century Blake Breaker.
6. Austin Manufacturing Company, Chicago, Illinois. Catalogue No. 17. Description of Austin Gyratory or Spindle Rock Breakers.
7. *Ibid.* Private communication giving data as to life of wearing parts, costs of crushing, etc.

8. Carterville Foundry and Machine Company, Carterville, Missouri. Private communication giving information concerning the development of the breakers made by them, life of wearing parts, etc.
9. Chalmers & Williams, Chicago, Illinois. Catalogue No. 1. Description of Kennedy Spindle Breaker.
10. Denver Engineering Works Company, Denver, Colorado. Catalogue.
11. Denver Fire Clay Company, Denver, Colorado. Bulletin No. 19. The Case Laboratory Breaker.
12. Farrel Foundry and Machine Company, New. York. Catalogue A. Fourth edition. Information concerning Blake Breakers.
13. *Ibid.* Private communication giving costs of breaking, materials for wearing parts, etc.
14. Fried. Krupp Grusonwerk, Magdeburg-Buckau, Germany. Private communication.
15. Goodale, C. W., Butte, Montana. Private communication.
16. Hathaway, the C. L. Rock Crusher Company, Denver, Colorado. Catalogue No. 1. Describes the Hathaway Gyratory Rock Breakers.
17. *Ibid.* Private communication.
18. Humboldt Engineering Works Company, Kalk near Cologne, Germany. Catalogue.
19. National Drill and Manufacturing Company, Chicago, Illinois. Private communication containing information concerning National Sectional Breaker.
20. Ores and Metals, Vol. XV., (1906), p. 20. Article concerning Hathaway Gyratory Rock and Ore Breaker.
21. Power and Mining Machinery Company, Cudahy, Wisconsin. Private communication. Description of McCully Breaker. Data on capacity, etc.
22. Potter, William C., Aguas Calientes, Mexico. Private communication giving data as to life of wearing parts of Blake and McCully Breakers, etc.
23. Samson Manufacturing Company, The, Denver, Colorado. Catalogue No. 2. Description of the Samson Breaker.
24. *Ibid.* Private communication giving results of tests.
25. Sturtevant Mill Company, Boston, Massachusetts. Catalogue 50, also bulletins concerning Sturtevant Breakers.
26. *Ibid.* Private communication containing additional information as to cam and roller movement.
27. Yagle Foundry and Machine Company, Ltd., Pittsburg, Pennsylvania. Catalogue. Blake Rock and Ore Breaker.

CHAPTER XXIV.

ROLLS.

§ 937. PRINCIPLE OF ROLL CRUSHING. — Two cylinders placed near each other, in revolving toward one another draw lumps of coarse material between them and exert sufficient pressure to crush the lumps. Rolls are pre-eminent among machines for crushing with minimum fines since, as soon as a particle is reduced sufficiently to drop through the space between the rolls, it passes through and is not subjected to further crushing.

The following paragraphs take up the main improvements in roll practice as gathered from correspondence with the leading manufacturers of milling machinery.

§ 938. ROLLS FOR DRY CRUSHING. — In speaking of rolls for dry crushing, Philip Argall [11] states that high-speed belted rolls are the most successful dry fine crushers known. The development of these rolls has been distinctly American, with Krom as the pioneer in the movement. Such rolls should invariably be the second step in the successive comminution of ores, preceded by one or more breakers of the Gates or Blake patterns which break the large sizes down to 1.5 to 2-inch cubes. From this one should crush with rolls to 30 or 40 mesh, and below this with tube mills, etc.

Rolls do the most effective work on 1.5 to 2-inch cubes; in wet crushing they give good results down to 20 mesh and fair results to 40 mesh if the ore is not too talcy or clayey. In dry crushing to 30 mesh, rolls will treat practically four times as much as dry stamps. Stamps are not suited for crushing fine sizes, for example $\frac{3}{16}$-inch material, whereas such a feed is the very best for rolls.

§ 939. SPEED OF ROLLS AND SPEED CURVES. — There is a wide variation in practice regarding the proper peripheral speed of rolls. Speeds are found ranging from 30 to 40 feet per minute in the old Cornish rolls, to 800 to 1,000 feet per minute for the modern high-speed rolls. There is undoubtedly, however, a given speed, for each different size of material, which gives the best results and where the maximum capacity is obtained with the minimum power. After making a long and careful series of experiments during which the best results were obtained, Mr. Argall had the speeds correlated, and from them the following formulæ and diagram, Fig. 578, are deduced:

$$100 \times \frac{\text{Log}\left(\frac{16}{S}\right)}{\text{Log } 2} = P; \; 0.0476 \times D = Sn; \frac{382}{D} \times \frac{\text{Log}\left(\frac{16}{S}\right)}{\text{Log } 2} = N$$

Where D is diameter of rolls in inches; N is number of revolutions per minute; P is peripheral speed in feet per minute; S is size in inches of maximum ore cube fed; and Sn is size in inches of maximum cube fed for given diameter of roll.

These speeds are not necessarily correct for all ores or conditions, but are the speeds at which Mr. Argall secured the best results, and are safe and reliable

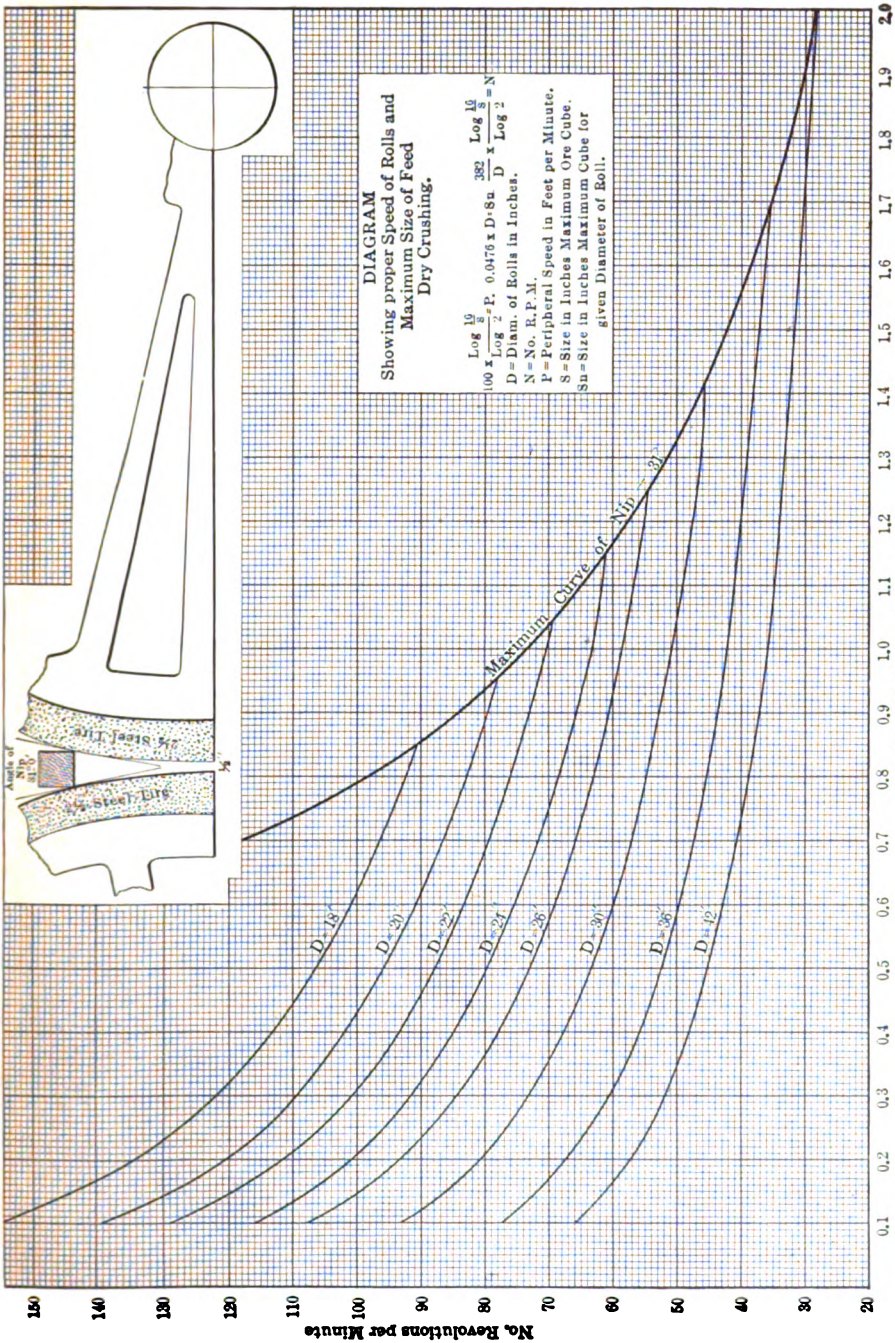
DIAGRAM
Showing proper Speed of Rolls and Maximum Size of Feed Dry Crushing.
$100 \times \frac{\text{Log}\,\frac{10}{8}}{\text{Log}\,2} = P.\ 0.0476 \times D \times Sn\ \frac{382}{D} \times \frac{\text{Log}\,\frac{10}{8}}{\text{Log}\,2} = N$
D = Diam. of Rolls in Inches.
N = No. R.P.M.
P = Peripheral Speed in Feet per Minute.
S = Size in Inches Maximum Ore Cube.
Sn = Size in Inches Maximum Cube for given Diameter of Roll.
Maximum Curve of Nip = 31°
D = 18'
D = 20'
D = 22'
D = 24'
D = 26'
D = 30'
D = 36'
D = 42'
Angle of Nip 31°0'
2½ Steel Tire
2½ Steel Tire
½
No. Revolutions per Minute
Size of Cube in Inches

FIG. 578.

to start any rolls with until a better speed to suit the given ore can be found. In securing the above results, Mr. Argall used a crushing ratio of 4:1; *i.e.*, the particles were broken to one-quarter size of feed, a ratio which should never be exceeded.

In the same diagram, Fig. 578, the speed curves of the various size rolls are terminated on the right by another curve, which may be called the curve of nip. This latter curve is derived from the fact that there should be a relative proportion between the diameter of the rolls and the size of the cubes fed to them, and that these cubes should not exceed the "angle of nip." To illustrate from the diagram, we have:

For a 42-inch roll a maximum cube of 2 inches and 28 revolutions per minute.

For a 26-inch roll a maximum cube of 1.25 inches and 55 revolutions per minute.

For a 26-inch roll a maximum cube of 0.50 inch and 73 revolutions per minute.

For a 26-inch roll a maximum cube of 0.25 inch and 83 revolutions per minute.

For a 26-inch roll a maximum cube of 0.05 inch and 108 revolutions per minute.

§ 940. ANGLE OF NIP. — Upon pages 89 to 95 of Vol. I. the reader will find a discussion of the angle of nip. It will be noted that the angle there called the angle of nip is one-half the angle included between tangents drawn to the ore particle at the points of its contact with the roll surfaces. Argall takes as the angle of nip this entire angle, and the writer after carefully considering the matter feels that Argall is justified in the position which he has taken, and is impelled to modify what has been said in Vol. I. concerning the angle of nip, defining the same as that angle included between tangents drawn to the ore particles at its points of contact with the roll surfaces. The most favorable angle of nip then becomes 32° instead of 16°. The formula for computing the angle of nip, given on page 90 of Ore Dressing, should now read $\frac{r+a}{r+b} = \text{Cosine } \frac{N}{2}$, where N = angle of nip, a = ½ space between the rolls, b = radius of the sphere to be crushed, and r = radius of roll. With this modification the derivation of the formula will be exactly like that given in Vol. I., pages 89 and 90.

Haton de la Goupillière [9] derives a formula which is of value as indicating the largest particles that can be fed to any set of rolls. This formula is $\frac{r}{R} > 18 - 19\ m$ where r = radius of the roll, R = radius of largest particle in the feed, and m = the ratio between the diameter of the largest grain in the crushed product and that of the largest grain in the feed. In order to obtain the most favorable angle of nip, and making a reduction in the ratio of 4 : 1, $\frac{r}{R}$ should be made equal to or greater than from 21 to 21.6. If $\frac{r}{R}$ is greater than the above given values no harm is done, the angle of nip merely being more favorable than is necessary.

§ 941. CAPACITY OF ROLLS. — The theoretical capacity of rolls is mathematically expressed by Argall [11] as $\frac{60\ P\ W\ S}{1{,}728} = C$, which is the ribbon spoken of in Vol. I. of Ore Dressing, page 101; where P represents the peripheral speed in inches per minute; W represents the width of the roll faces in inches; S represents the space between the rolls in inches; and C represents the capacity

in cubic feet per hour. But the actual capacity would be much less than the theoretical.

Take the case of a 15 × 26-inch roll, making 60 revolutions per minute and crushing from 1 to 0.25 inch. The theoretical capacity is, by the formula, at once found to be 589 cubic feet per hour, taking the mean diameter of the roll at 24 inches. But how shall one find the actual capacity of these rolls in cubic feet per hour of finished product? It is impossible, but it can be closely approximated. Mr. Argall's experiments have shown that there is a very

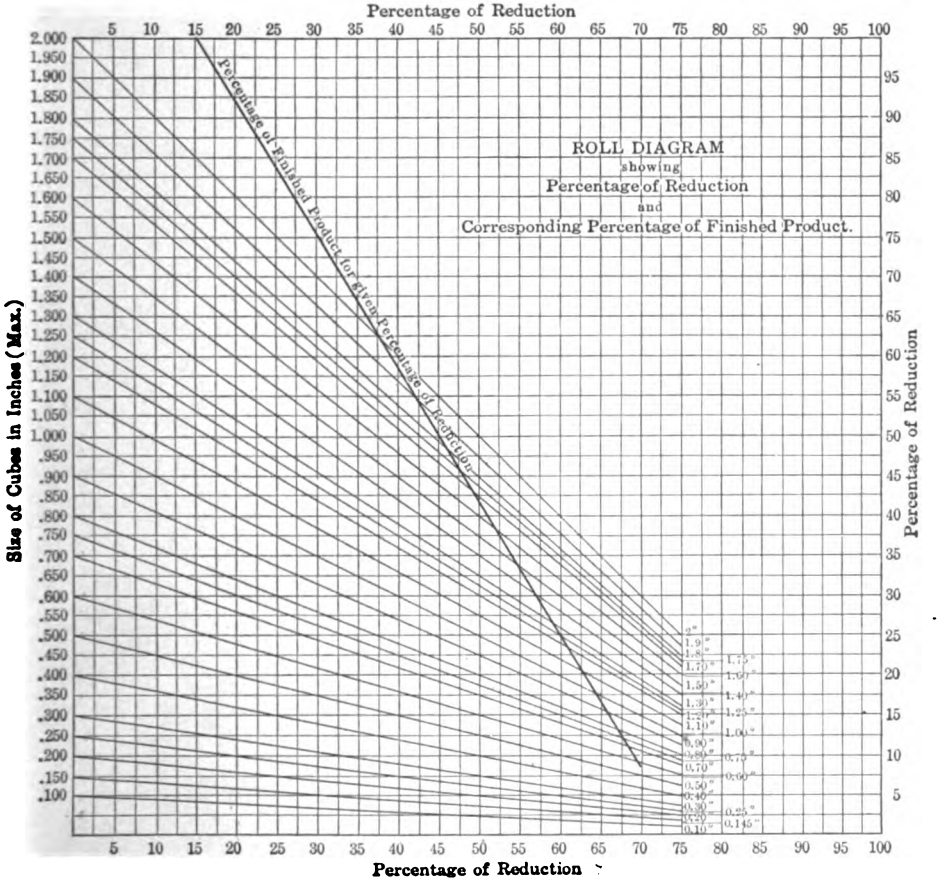

FIG. 579. — DIAGRAM SHOWING PERCENTAGE REDUCTION AND CORRESPONDING PERCENTAGE OF FINISHED PRODUCTS.

close relation between the percentage of reduction and the amount of finished product for any given ore. By percentage reduction is meant that 1-inch cube reduced to 0.75 inch is 25% reduction; to 0.5 inch is 50% reduction, etc. From the above-mentioned relation Mr. Argall has derived the diagram, Fig. 579.

Applying this diagram to the specific case, 1 to 0.25 inch, and following the diagonal line from 1 inch on the left, it is found to intersect the 0.250-inch horizontal line at the ordinate marked 75% reduction; showing that the maximum reduction in the crushing process has been 75%.

Taking 75% reduction of the right hand of the diagram, and following the

horizontal line, it is found to intersect the curve of finished product at the 30% ordinate, showing that for 75% reduction the finished product is 30% of the theoretical. The latter, as previously shown, is 589 cubic feet per hour, 30% of which gives the cubic feet per hour of finished product as 176 cubic feet; and so on for any ratio of reduction shown on the diagram.

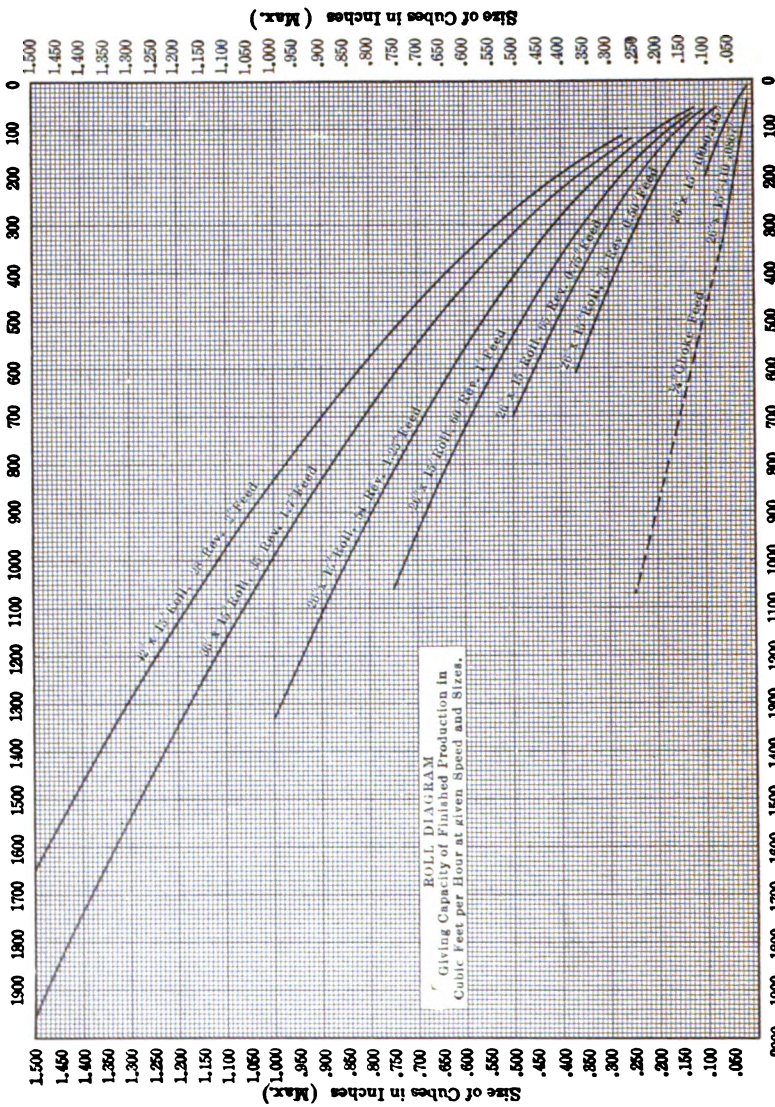
ROLL DIAGRAM
Giving Capacity of Finished Production in Cubic Feet per Hour at given Speed and Sizes.
Size of Cubes in Inches (Max.)
Roll Capacity in Cubic Feet per Hour

FIG. 580.

This curve of "finished product" Mr. Argall has fixed from actual experiments with quartzose ores of medium crushing qualities, and he considers it, therefore, correct for average conditions with first-class rolls. A few, say three, experiments will, however, allow this curve to be plotted for any particular ore.

The diagram, Fig. 580, gives the capacity in cubic feet per hour of various

sized rolls, running at the speed most suitable for the size of feed they are assumed to receive. This is compiled from the "Speed" and "Finished Product" diagrams. These diagrams are figured in cubic feet per hour because it is, in Mr. Argall's opinion, the only correct basis of comparison between ores.

§ 942. FEATURES AND FAULTS OF ROLLS. — Mr. Argall has reviewed his twenty years' experience with dry crushing rolls and enumerates the various difficulties met with. Among other things, he says that high-speed geared rolls are not a success even in coarse crushing.

Rolls which have separate journal boxes for the sliding roll cannot be kept at an even pressure. This results in unequal openings across the faces, inferior crushing, end thrusts, and hot boxes. The alleged cure for this trouble (making one roll wider than the other with the idea of making the two fit by flanging) is as bad as the original trouble, and results only in decreased capacity and increased friction and repair bills.

Rolls should remain parallel and truly level and any departure from this rule results in end thrusts, flanging, and increased frictional resistance. A moving roll mounted on a swinging lever will not remain truly level because of the wear of the pin joint. Such a roll should be mounted on a sliding device with large anti-friction surfaces. If swinging levers are used the spring should not multiply on the space between the rolls, but, if possible, reduce so as to ensure smooth running and lessening of shock. All rolls should have swivel or ball-and-socket journal boxes.

The application of more power to the fixed than to the movable roll is not based on good reasoning. Attempts to run one roll faster than the other are objectionable for several reasons, one of which is that the roll is changed from a crusher to a grinder.

All rolls, excepting coarse or roughing rolls, should be provided with feeders to deliver a full and uniform feed. In crushing 0.25-inch ore or coarser, the feeder should never let the stream exceed in thickness the maximum diameter of the particles. On smaller sizes the principle of "choke-feed" can be used to better advantage as regards capacity. This fact is illustrated by the figures given in Table 424.

TABLE 424. — COMPARISON BETWEEN FREE AND CHOKE FED ROLLS.

Diameter in Inches.	Face in Inches.	Revolutions per Minute.	Crushing from— Inch.	Crushing to— Inch.	Theoretical Capacity in Cubic Feet per Hour.	Actual Capacity Cubic Feet per Hour.
26	15	110	0.1	0.02	86	30
*26	*15	*110	*1.1	*0.02	*86	*75

* "Choke-feed" 0.25 inch thick.

Mr. Argall considers that babbitt is better and cheaper for roll bearings than bronze. It is easy to rebabbitt each time tires are changed, when ball-and-socket or swivel boxes are used.

In a mill it is important to have but one size and make of rolls. In this way the parts are interchangeable and less money is thereby tied up in spare parts.

In Ore Dressing, Vol. I., the author expressed the view that it was wise to place the cheek plate at a distance from the end of the roll equal to one-half the diameter of the largest particle fed, in order that the act of crushing should remove the flanges from the rolls.

He is now inclined to the belief that the advantage so gained is more than offset by the amount of oversize made by the rolls, and therefore advocates the

use of cheek plates close up to the ends of the rolls. With this change, however, it will be necessary periodically to true up the rolls with the emery block, or otherwise to avoid the formation of flanges, in order to prevent the edges of the shells from chipping, and to maintain the rolls in first-class crushing order.

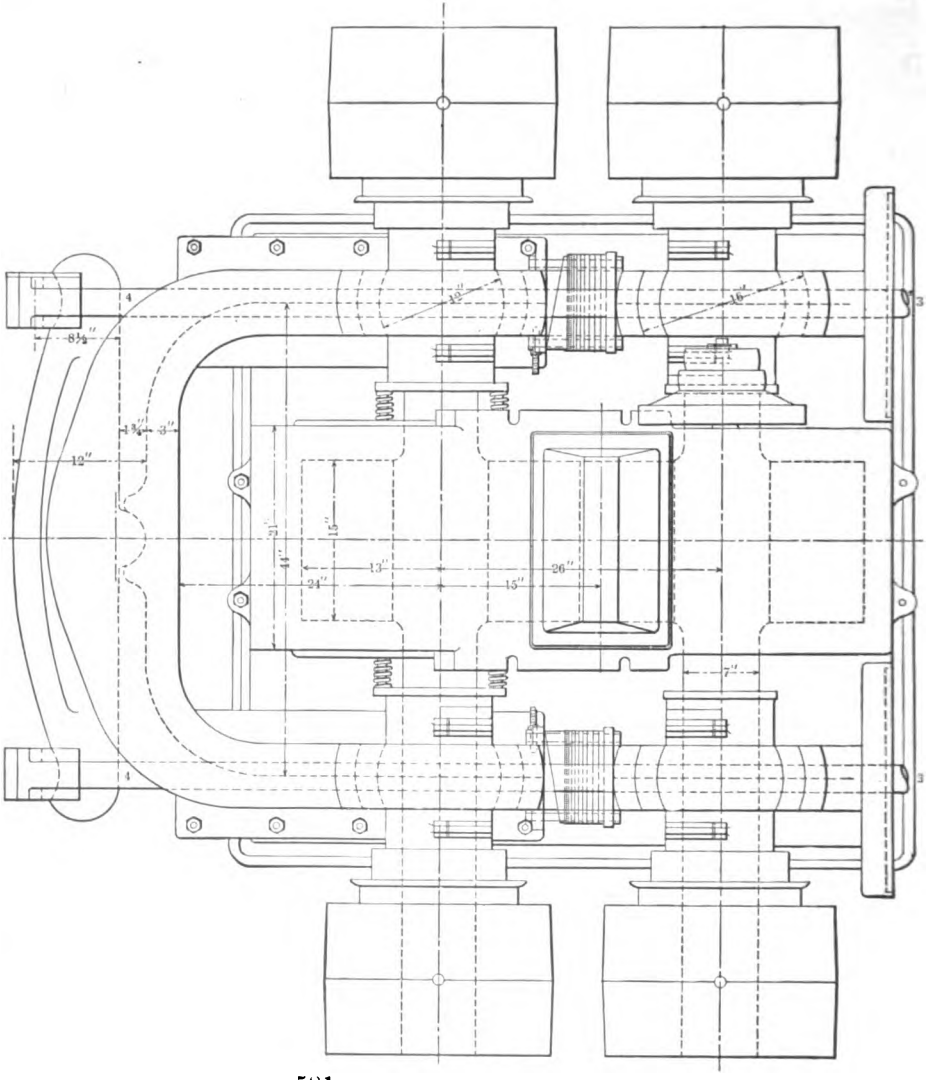

FIG. 581*a*. — PLAN OF ARGALL ROLLS.

§ 943. ARGALL ROLLS. — See Figs. 581*a* and *b*. Argall prefers a solid U-shaped frame (1), Fig. 581*a*, for the moving roll to be mounted in, supported on roller bearings (2) of very large area, thus ensuring easy response to spring pressure. This U-shaped frame transmits equal pressure from the spring at (3), (not shown), through the four tension bolts (4), to the two boxes of the movable roll. Swivel journal boxes are provided and are cast solid without bolts.

Recesses in the U frame and in the main roll frame are bored out to fit these boxes, which form, at the top, caps to hold the side frame in position.

The journal boxes also have packing chambers to exclude dust from the bearings, while the end adjustment is perfectly taken care of by means of collars sliding on feathers so as to rotate with the shaft, and adjusted by three screws passing through the hub of the main drive wheel on the one side, and through a split collar (5), Fig. 581 *b*, clamped to the shaft on the other.

The driving pulleys are so attached that end movement is impossible. They act as collars. Anti-friction collars are placed between the pulley hubs and the ends of the boxes to prevent friction and wear.

One of these rolls running, under hard service, night and day for nearly two years has neither developed defects nor suggested improvements. For six months of this time it was operated at a speed of 900 feet per minute, crushing from 0.1 inch to 0.02 inch; but it was afterwards reduced to 750 feet per minute to conform to the practice in that particular mill.

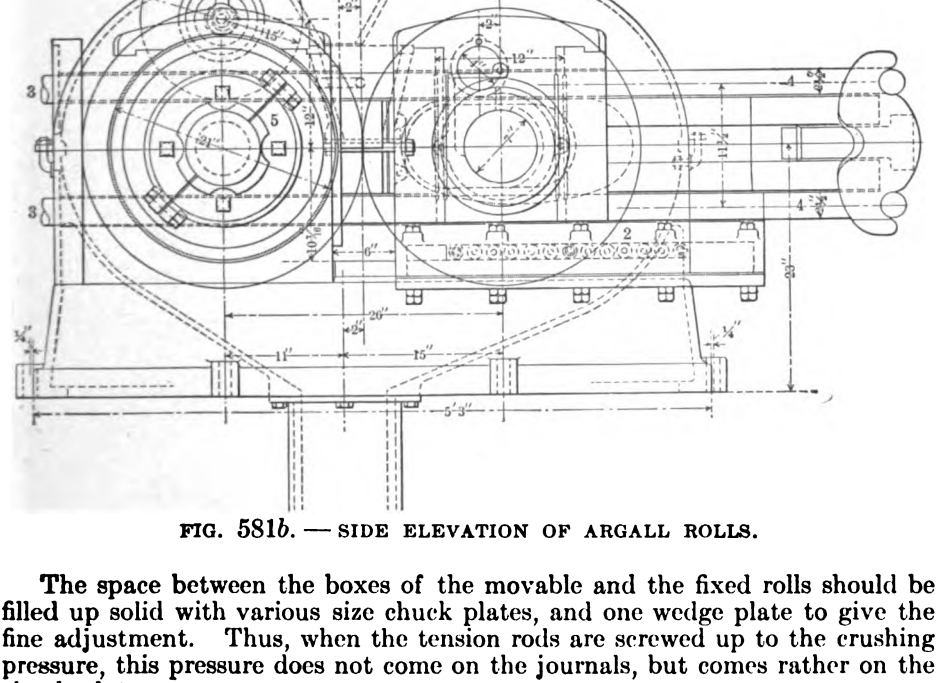

FIG. 581*b*. — SIDE ELEVATION OF ARGALL ROLLS.

The space between the boxes of the movable and the fixed rolls should be filled up solid with various size chuck plates, and one wedge plate to give the fine adjustment. Thus, when the tension rods are screwed up to the crushing pressure, this pressure does not come on the journals, but comes rather on the chuck plates.

§ 944. SUPERIOR CRUSHING ROLLS. — In the Superior Rolls,[16] see Fig. 582, the movable roll is arranged in such a manner that it can move very much out of line without bringing any stresses into the machine. The base frame *F* is cast in one piece. The roll is made up of two cone centers and a steel shell. One center is pressed on the shaft while the other is split, and by drawing the latter on by means of bolts, the shell is held firmly in place. The bearings of the fixed roll are cast directly in the base frame. All four bearings are babbitted and held in place by cover plates and bolts. The movable pillow block *P* slides on the frame *F*. The bearing box *M* is capable of turning about a

vertical axis. Shims are provided for maintaining a fixed distance between the rolls, while a tie rod *R* runs through the frame, and by means of the springs N prevents the movable roll from receding, except when an extraordinarily hard object gets into the feed.

Mill 167 [21] uses two sets of these rolls 54 × 20 inches. These are said to be the largest rolls of their kind ever built. The parts are extra heavy throughout and are designed for a spring pressure which makes them practically rigid rolls. They are carefully housed and special attention is paid to lubrication. Removable liners protect all parts coming in contact with the ore.

§ 945. The McFarlane Parallel Rolls,[12] Fig. 583, are giving satisfaction in many localities. These rolls are simple in design and easy of adjustment and repair. The essential characteristics may be summarized as follows:

1. Self-contained construction. 2. Removable journal boxes, so arranged as to present three new bearing surfaces before requiring rebabbitting; journal-

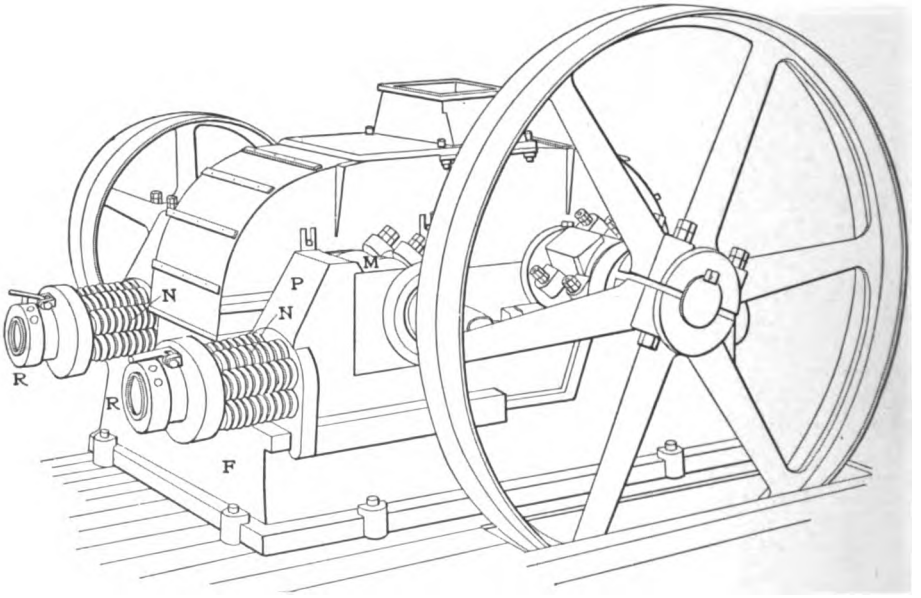

FIG. 582. — SUPERIOR CRUSHING ROLLS.

boxes can be rebabbitted on a mandrel. 3. Both journals on the movable roll are contained in one heavy sliding saddle. 4. The stresses due to crushing shocks, spring tension, and belt pull are all parallel, and also parallel with the line of motion of the saddle carrying the movable roll. This construction ensures parallel alignment of the shells, great rigidity, and a minimum number of parts.

§ 946. Sturtevant Balanced Rolls. — In the Sturtevant wide-faced balanced roughing rolls [18] all four boxes are movable and held in position by springs. The object of this construction is to divide the thrust whenever the springs yield, and also to divide by two the distance through which either roll must move under these circumstances, thereby reducing the stresses within the machines. In these rolls the spring pressure is not adjustable. An ingenious form of bearing is used, whereby only the box is compelled to move with the compression of the springs, the pillow block remaining stationary. This construction greatly reduces the weight of moving parts and allows the

rolls to advance and recede more readily than in the usual designs. The machine is shown in Fig. 584. The base frame is cast in one piece. The bearings are made up of a pedestal P which encloses the box B. The shaft S is in

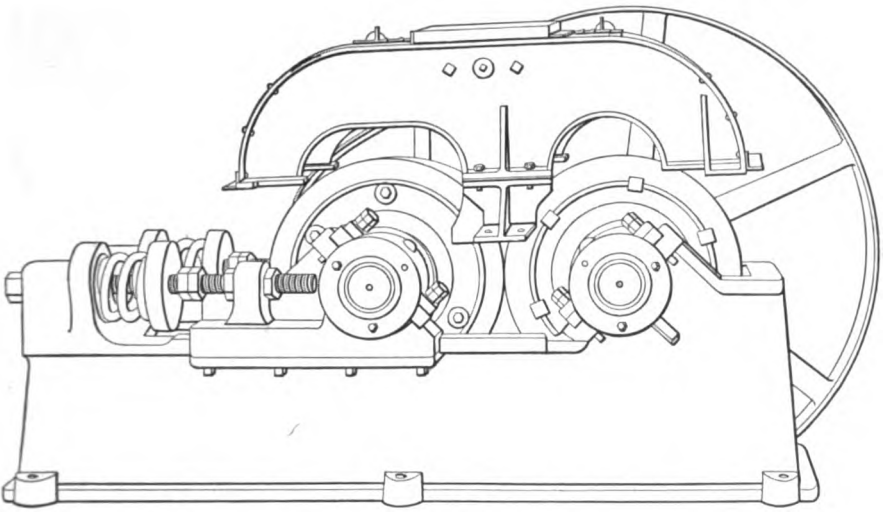

FIG. 583. — McFARLANE PARALLEL ROLLS.

contact with the lining L of the box for only half of its circumference. Therefore the shaft cannot be cramped in any position although the bearing surface of the shaft is further restricted when the rolls are in operation. By turning up the nuts on the tension bolts T, the pressure on the box is relieved and it may be removed. When the springs are compressed, due to a hard object between the rolls or over-feeding, the only part of this pillow block that moves

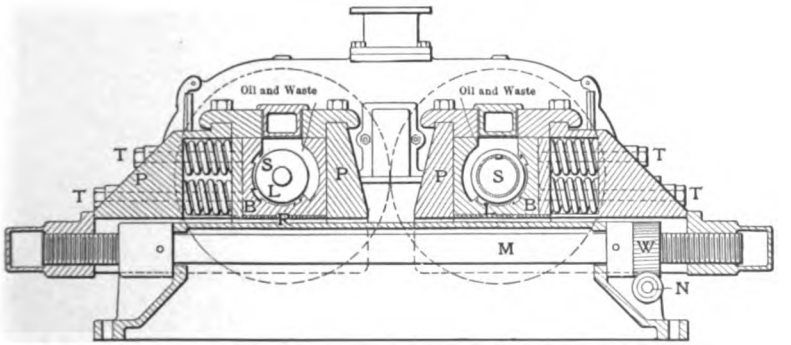

FIG. 584. — STURTEVANT BALANCED ROLLS.

is the box B. The box slides on a renewable steel plate R. As shown in the cut, the distance between the rolls is regulated by means of the threaded tie-rod M which is turned by the rod N through the medium of the worm-gear W.

Table 425 contains data given by the Sturtevant Mill Company.

TABLE 425. — SIZES, POWER, ETC., OF STURTEVANT BALANCED ROLLS.

Size. Inches.	Pulley. Inches.	Horse-power.	Length. Feet and Inches.	Width. Feet and Inches.	Height. Feet.	Weight. Pounds.
16x10	48x 5	4	5 ft.	4 ft. 10 in.	4 ft.	6,000
21x10	60x 6	8	5 ft. 9 in.	6 " 3 "	5 "	12,500
32x16	72x10	15	9 " 4 "	9 " 1 "	6 "	33,000

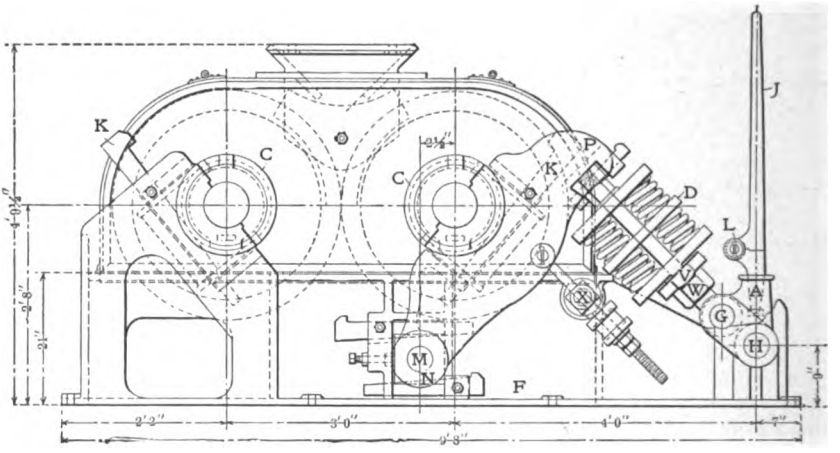

FIG. 585*a*. — SIDE ELEVATION OF HUMPHREY CRUSHING ROLLS.

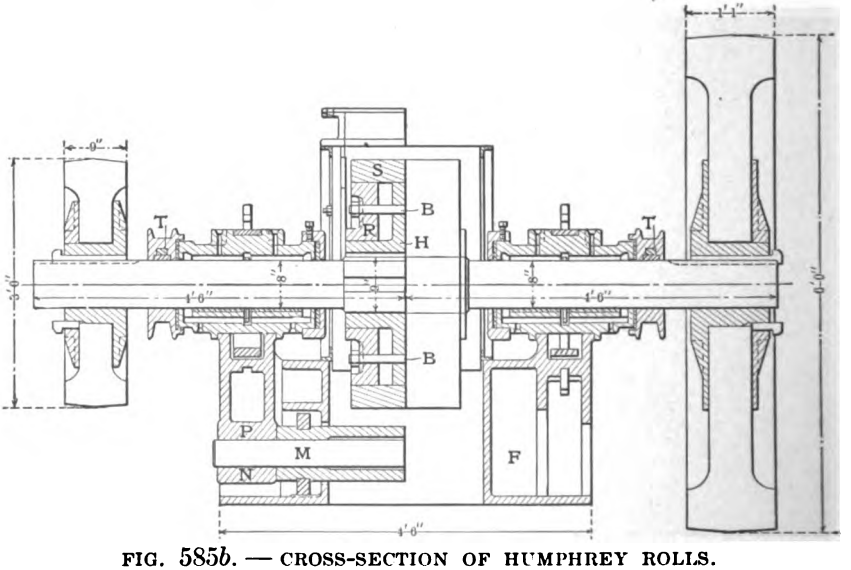

FIG. 585*b*. — CROSS-SECTION OF HUMPHREY ROLLS.

§947. HUMPHREY ROLLS. — The 36 × 16-inch Humphrey rolls [5] are shown in section and elevation in Figs. 585*a* and *b*. The frame *F* is cast in one piece. The rolls are made up of a hub *H*, two hearts or expansion rings *R*, and shell *S*. The hub is permanently keyed to the shaft and is of an outside diameter equal

to the inside diameter of the shell. By reference to the cross-section it will be seen that the hub and shell are turned to receive the rings which are in section truncated cones. The two opposite rings are drawn toward each other by means of bolts *B*, which hold the shell firmly in place, but allow of its being readily removed. The journal box is kept in position by the clamp *C* and the key *K*, by means of which bolts and jam nuts are avoided. The collars, outside of the boxes, are fastened to the shaft by a gib and key similar to a stamp tappet. The movable roll is held in position by a swinging pillow block which is supported at its lower end by the shaft *M* in the cast-iron support *N*. The free, or movable, end of the swinging pillow block is held in position by the spring cage *D*, which in turn is supported by the strut *G* with which it forms a toggle, since the strut *G* may turn about the point *H*. When the rolls are in use, this toggle joint is bent slightly downward, but when it is desired to open the rolls, the lever *J* serves to overthrow the toggle, and the joint in the lever at *L* prevents injury to the operator. When it is desired to replace the rolls for crushing, the lever is taken out of its socket *A* and turned 180° and replaced, when the joint at *L* again prevents a shock to the operator. The cast-iron support *N* for the lower end of the swinging pillow block may be raised or lowered by means of keys. By this means one roll may be kept from overrunning the other, or the rolls may be moved laterally to induce even wear, without bringing any considerable pressure on the collars. This adjustment has been found a satisfactory preventive of heated journals and thrust bearings. The two pillow blocks are keyed at their lower end to the same shaft *M* in order that when the springs yield, the two pillow blocks may move together as one member, and preserve the alignment of the movable roll. There are no shims in these rolls. The spreaders *X* serve to keep the rolls apart. The pressure of the springs is adjustable by means of tension-nuts not shown. The distance between the rolls is regulated by means of the nut *V* and the jam nuts *W*. Table 426 gives details as to sizes, power, etc.

TABLE 426 — SIZES, POWER, ETC., OF HUMPHREY ROLLS.

Size Rolls. Inches.	Size Pulleys. Inches.	Speed Revolutions per Minute.	Weight. Pounds.	Approximate Horse-power.
12x12	24x 4½ / 12x 4½	200 to 250	3,000	3
20x12	48x 9 / 24x 7	100 to 125	9,500	7
27x14	54x11 / 27x 7	75 to 200	16,000	10
36x16	72x13 / 36x 9	60 to 175	28,000	20
40x16	84x15 / 42x11	60 to 150	40,000	25

§ 948. RIGID ROLLS. — Rigid rolls are constructed without springs and are therefore positive in action, making but small amount of oversize; for a lump of ore that passes through rigid rolls must have at least one dimension of the exact size desired. They are less complicated than spring rolls and save a large amount of re-screening, re-elevating, and re-crushing.

Springs are used in rolls in order that the rolls may move apart in case some foreign object, as a hammer head or drill point, should get into the feed by accident. But under these circumstances a considerable amount of oversize is formed invariably, and it frequently happens that, to prevent this evil the springs are set so tight as to become of questionable utility. It is also important to note in this connection that in most mill designs at least part of the rolls in use are protected, at some point, from iron objects by cobbing magnets, screens, or roller feeders.

The rigid rolls[6] of the Denver Engineering Works Company are shown in Fig. 586*a*, and a cross-section through one shaft is given in Fig. 586*b*. The

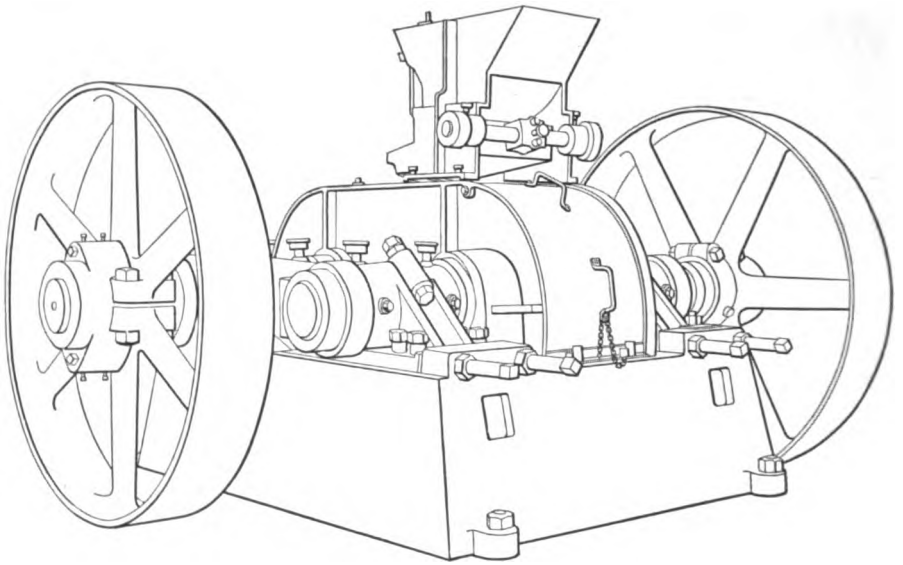

FIG. 586*a*. — DENVER ENGINEERING WORKS COMPANY'S RIGID ROLLS.

frame is cast in one piece and so designed as to form a continuous box girder under the bearings on each side. The shafts are of forged mild steel. The bearings are made dust-proof, as shown in the cross-section, by means of the adjustable thrust collars on the outside of the bearings; and hemp packing

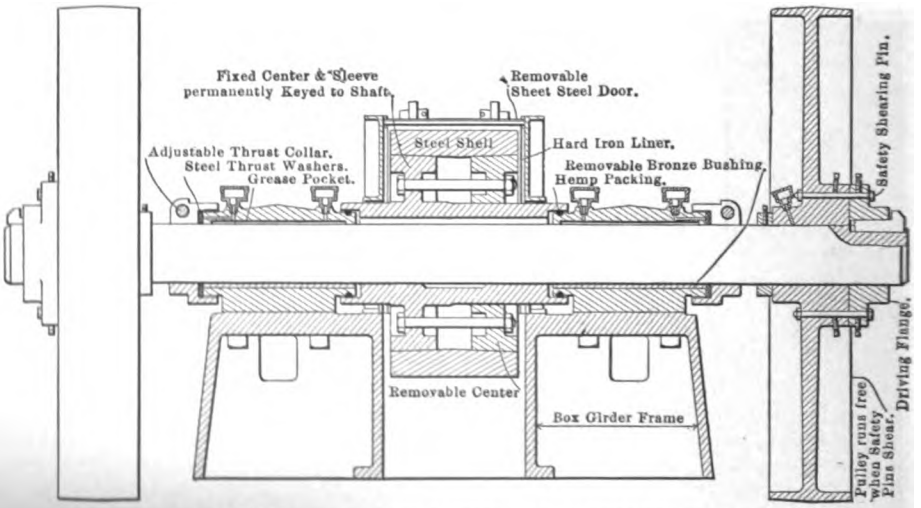

FIG. 586*b*. — CROSS-SECTION OF RIGID ROLLS.

between the central, or fixed, portion of the roll and the inward side of the bearings. No babbitt is used in the bearings, as the manufacturers maintain

that it is impossible to keep the rolls in strict alignment with babbitted bearings, especially when rebabbitting. The accuracy of alignment does much to determine the life of the shells. The phosphor-bronze bushings are machined both inside and out, and fit into machine-finished seats. The rolls are made up of a fixed center, a movable center, and a steel shell. The fixed center is forced onto the shaft over a feather by a hydraulic press and has a bearing surface one and one-half times the width of the shell. The movable center is drawn onto the fixed center by bolts; and this operation serves to hold the shell in place, since both centers and the inner side of the shell are double-cone surfaces. An endwise adjustment of the shells is provided for by means of the adjustable thrust collars on the outside of each of the four bearings. To make the necessary adjustments for regulating the distance between the rolls and taking up the wear of the shells, one set of bearings is provided with adjusting screws and holding-down bolts working in slotted holes. There are no shims. As a safety device to prevent possible damage to the rolls by uncrushed material in the feed, each driving pulley is loose on the shaft, and is bolted with two bolts to a driving flange, which in turn is keyed to the shaft. These bolts are of standard size and thread in order to be readily duplicated, and are of such diameter that they will shear, if the rolls are subjected to undue shock or strain, thereby allowing the pulleys to run free on the shaft and preventing damage to the rolls. A compression grease cup is mounted on the pulley hub to lubricate the shaft and prevent the pulleys from becoming heated and binding when running free. A collar on the inside of the pulley and the flange on the outside would prevent the pulleys from moving out of line on the shaft in the advent of its shearing these bolts. The rolls, finally, are enclosed in a dust-proof housing.

Rigid rolls are giving satisfactory service in many[7] places. The shearing pins have been found a sufficient precaution against hard-steel or cast-iron objects between the rolls. A set of rigid rolls[4] of 16-inch face by 36-inch diameter made by the Denver Engineering Works Company are used at Mill 181 to re-crush the $\frac{3}{16}$-inch to $\frac{5}{8}$-inch oversize from stamp trommel, when the mortar screen of the steam stamp is round punched holes $\frac{5}{8}$ inch diameter. The rolls re-crush this oversize to $\frac{3}{16}$ inch. It is stated that the rolls are operated economically and with no difficulty. The roll tires are $3\frac{1}{2}$ inches thick when new, and are worn down without turning or truing to $\frac{3}{8}$ inch or less. They crush 200 tons a day and require 25 horse-power. Their success led to six duplicates being installed in this mill and three similar rolls in the Tamarack mill.

§ 949. STURTEVANT CENTRIFUGAL ROLLS. — Centrifugal rolls[17] are adapted only to certain classes of reduction. They are recommended for finishing, or for very fine crushing on soft or moderately hard materials. The tires are of narrow face and of comparatively large diameter; thus great crushing pressures are brought to bear on a narrow surface running at high speed. As narrow tires may be kept true more easily than wide ones, the product of these rolls should be extremely uniform.

Fig. 587 shows the construction of these rolls. The tires *T* are held in place by the weights *W*, which in turn are held firmly against the tires by the springs *S S*. The weights *W* are confined in their movements by shoulders on the head *H*. *C* marks holes for set screws. When it is desired to remove a tire, set screws are turned into these holes *C* and press back the weights until the tongue of the tire is free from the groove *G* of the weights. The tire can then be slipped off and a new one put on.

Since the springs hold the weights firmly against the shell, these rolls can be run slowly, in which case centrifugal force is only slightly brought into play. Running at high speed, these rolls utilize the pressure exerted by the cen-

trifugal force of the weights as described in Ore Dressing, Vol. I., page 75. The roll shafts are not moved back at all in crushing. The tires can each be forced back, but without transmitting the shock to the shafts. Moreover,

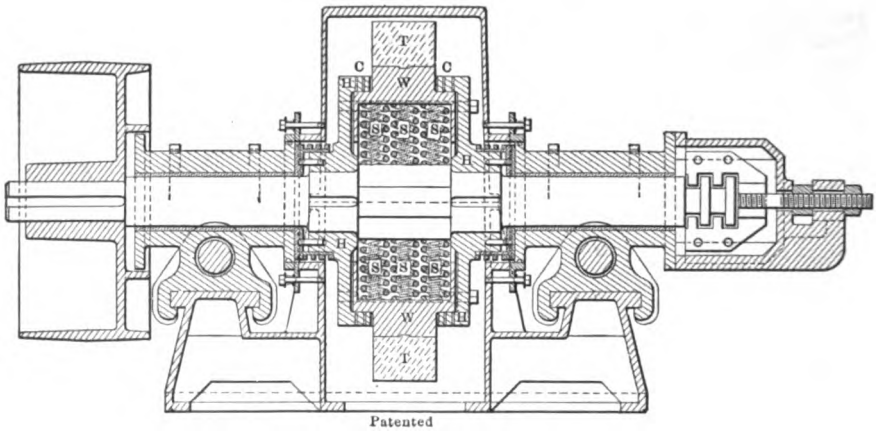

FIG. 587. — CROSS-SECTION OF STURTEVANT CENTRIFUGAL ROLLS.

since both the tires move, each moves only half the distance and destructive shocks are lessened. For this reason heavy foundations are unnecessary.

§ 950. THE FRIED. KRUPP GRUSONWERK [8] makes high-speed rolls adapted for fine crushing (see Fig. 588). These rolls are manufactured in several sizes,

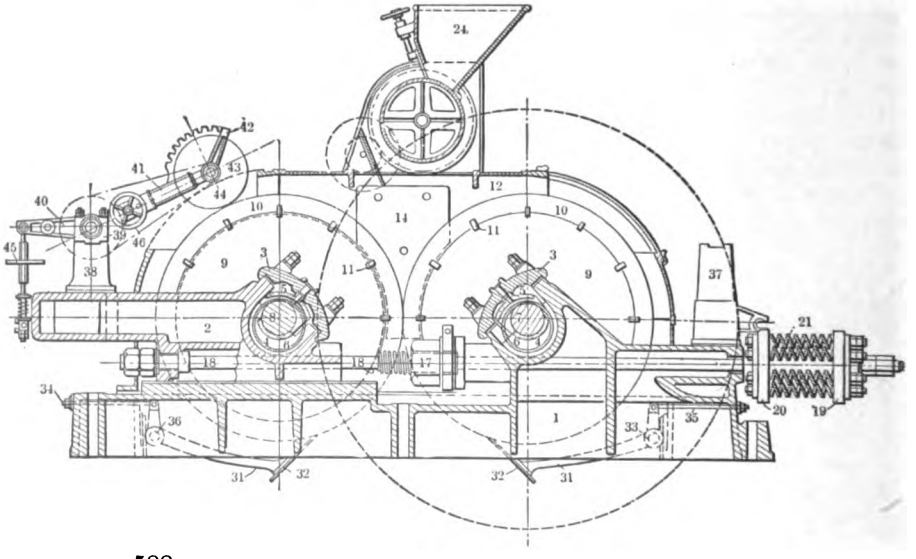

FIG. 588. — SIDE ELEVATION FRIED. KRUPP HIGH-SPEED ROLLS.

varying from 27½ inches in diameter to 47¼ inches and from 6 to 8 inches face. They are mounted on a strong cast-iron frame of two longitudinal and two transverse sides, which is secured to the foundation by six bolts. The lower parts of the bearings of the fixed roll are cast with the frame in one piece. The

bearings of the movable roll are united by a horizontal horseshoe yoke, or casting, and slide with a large bearing surface, on corresponding parts of the frame. By this arrangement, any jamming or angular displacement of the roll is prevented. The bearings are adapted for ring lubrication and are of a suitable length for reducing the superficial pressure.

The rolls have shells of cast steel which are conical inside and are secured to the conical cores of the rolls by means of draw bolts. These conical cores are hydraulically pressed over the steel shafts. The rolls are pressed against each other by rods which bear against the machine frame at the other end by means of coiled springs. Square-threaded nuts mounted on the draw rods permit of accurately adjusting the space between the rolls. The peripheral velocity of the rolls varies from 16 to 26 feet per second; and the output for a pair of rolls, $37\frac{3}{8} \times 5\frac{7}{8}$ inches, dry-crushing hard lead-blende with silicious gangue through $\frac{1}{4}$ inch, with rolls running 160 revolutions per minute, is 8,250 pounds per hour. In this case the ore fed was 10 millimeters and under.

Power required when not crushing is 5 horse-power; when crushing, 18 horse-power. The longitudinal section of these rolls shows the Fried. Krupp roll-shell grinding device in position on the frame.

§ 951. TRIPLEX ROLLS. — The most annoying feature of the old type of Cornish rolls is the inability to keep the grinding faces true. Numberless attempts have been made to overcome this trouble, but have given but small measure of success inasmuch as when this evil was corrected another arose in its place in nearly every case.

Triplex rolls [20] represent a new departure in roll design, the salient feature of which is the insertion of a third and larger roll between the faces and at right angles to the two rolls as ordinarily used. In this way two crushing faces are obtained where only one was available before. This of itself is perhaps the great improvement; however, other advantages exist hardly second to this. Another important advantage gained by this construction is that the crushing faces are kept true automatically. In the triplex rolls there is no tendency for grooves to form. The reason assigned for this is that the path of any two opposing points, one being on the periphery of the small roll and the other on the side or face of the middle or idler roll, cross each other, thus making grooving impossible. It has also been found that less spring pressure is required to crush a certain ore with this type of rolls than is necessary with the ordinary type, for the reason that each particle of ore, as it passes between the faces of the triplex rolls, is subjected to a twisting action, due to the cross directions in which the opposing faces are moving. This twisting or grinding action, together with the fact that the surfaces are true, makes the machine a good fine grinder.

The main frame (1), Fig. 589, is cast in one piece with slides planed parallel to receive the sliding saddles (2) which carry the two movable rolls; the spring pockets, as well as the journal seats for the idler roll (5), are cast integral with the frame.

Each of the two main rolls rests in a sliding saddle with special journals held in place by cast-iron caps bolted to the same. These saddles (2) are machined on their under sides, and have ample bearing surfaces.

Each saddle is controlled by two heavy tension rods (6) passing through the spring pockets of the main frame. One end of each of these tension rods is securely fastened to the saddle, while the other is provided with a nut (7) on the outer end of the frame whereby the opening between the roll faces may be obtained. These nuts are locked in place by cast-iron latches (8) secured to the main frame. The spring pressure is secured by a nut (9) and washer (10) on each tension rod, which holds the heavy compression springs against the

spring pockets in the main frame. These nuts are also locked by a simple latch.

The journals (11) of the main rolls are each cast in one piece turned true on the outside to fit the bored seats in the saddles, and provided with flanges to fit into turned recesses in the roll centers. They are lined with genuine babbitt metal, and can be rotated in their seats so as to present three successive wearing areas to the thrust of the roll shafts.

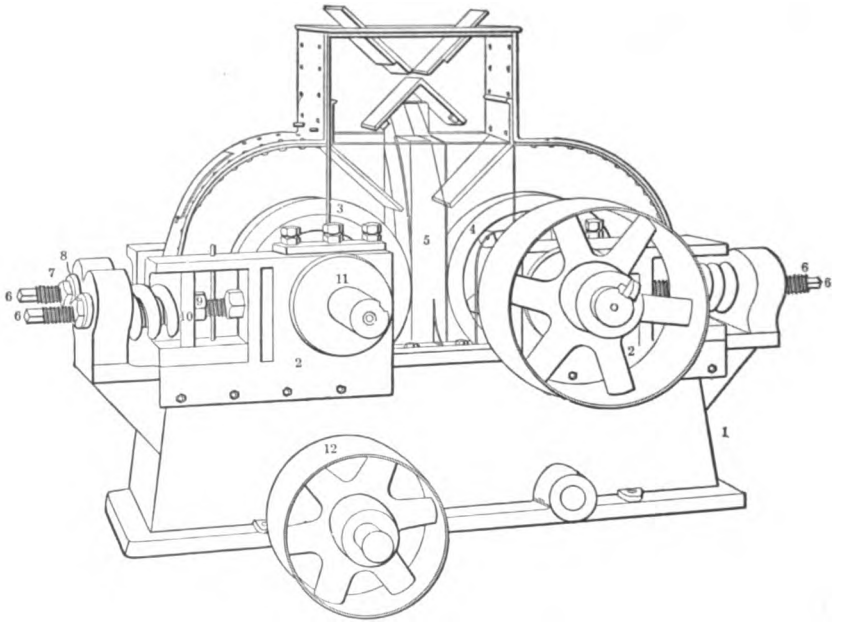

FIG. 589. — TRIPLEX ROLLS.

The rolls are driven by a single belt passing around both pulleys and an idler pulley (12). The idler roll (5) is built up of two rolled-steel tires mounted on either side of a steel-plate disc to which they are secured by counter-sunk rivets. The center of this disc is provided with cast-iron flanges bored to fit the shaft to which it is keyed.

The capacity of these rolls is two or three times that of ordinary rolls crushing from and to the same sizes. The rolls are not intended for use as roughing rolls, but rather for fine crushing.

The results obtained on crushing a tungsten ore through 30 mesh were as given in Table 427.

TABLE 427. — SIZING TEST OF CRUSHED PRODUCT FROM TRIPLEX ROLLS.

		Percent.
Through	30 mesh on 40 mesh	3
"	40 " " 50 "	10
"	50 " " 80 "	11
"	80 " " 100 "	11
"	100 " " 200 "	25
"	200 "	40
	Total	100

These rolls are reported[14] to be giving excellent satisfaction in several localities.

§ 952. The Humboldt Engineering Works Company[10] manufactures high-speed belted spring rolls for fine crushing. These rolls are very heavily constructed, and have nearly three times the capacity of ordinary low-speed rolls. The tires are made of the best Siemens-Martin rolled steel. The Humboldt Company manufactures several sizes of these rolls having capacities varying from 5½ tons to 20 tons per hour.

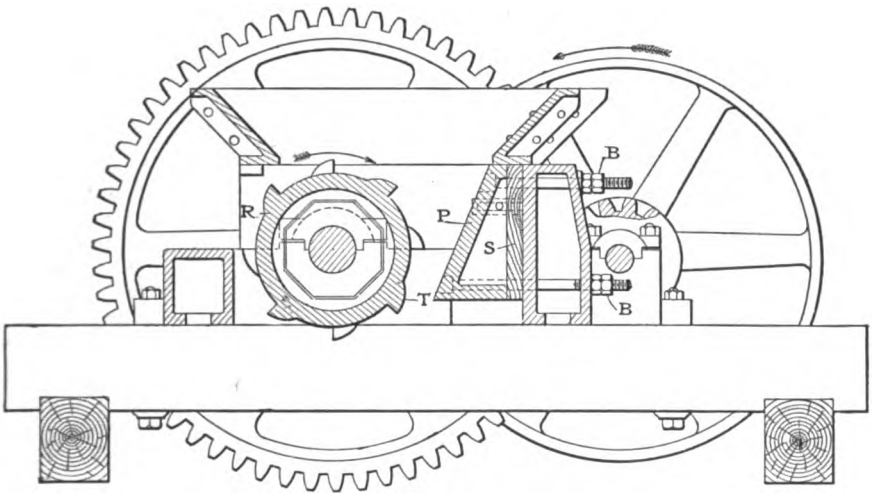

FIG. 590. — McLANAHAN'S SINGLE ROLL CRUSHER.

§ 953. Single-Roll Crusher. — The McLanahan and Stone[13] single-roll crusher is intended for crushing phosphate rock, limestone, and iron ore. It is not intended for fine crushing nor for use in cases where a minimum amount of dust is to be made. As shown in Fig. 590, it consists of a roll *R*, with either chilled teeth or corrugations *T*, which operates in front of a breaking plate *P*. The roll and plate are made of charcoal iron. The position of the roll is fixed, while the plate may be moved by means of the bolts *B* and the wood blocks *S*.

The makers give the data shown in Table 428.

TABLE 428. — McLANAHAN'S SINGLE-ROLL CRUSHER.

Size.	Weight.	Horse-power.
18x24 inches.	7,200 pounds.	15
18x30 "	9,400 "	20
18x36 "	10,000 "	25

The International Phosphate Company, Columbia, Tennessee, in a letter to the makers, states that it finds the machine entirely satisfactory for crushing phosphate rock.

The Allegheny Ore and Iron Company, of Clifton Forge, Virginia, reports favorably of this crusher, and cites one machine that crushed 20,000 tons of phosphate rock without repairs.

The capacity, as reported by these two authorities, is from 150 to 300 tons a day when crushing to 3-inch cube.

This machine may be fed slabs of phosphate rock 6 inches thick by 20 to 30 inches square, which are reduced to 3-inch cubes directly; limestone fed 1 inch to ½ inch in size may be crushed to ⅜ inch.

§ 954. CORRUGATED ROLLS AND ROLLS WITH INSERTED TEETH. — Rolls with inserted teeth,[1] and corrugated rolls, are used for crushing coal, rock-salt, phosphate rock, etc., as such rolls are well adapted to crushing soft materials. Where pointed teeth are used they are individually attached, or the teeth are cast on segments which are bolted to the roll body.

The inserted teeth seem to be the most satisfactory,[2] for when a tooth is broken it is only necessary to extract it and insert another in its place. Further, in case the character of the material to be crushed changes, the teeth may be changed to suit the new requirements without any interference with the main part of the machine.

The Allis-Chalmers 21½ × 21-inch rolls with inserted teeth are shown in Fig. 591.

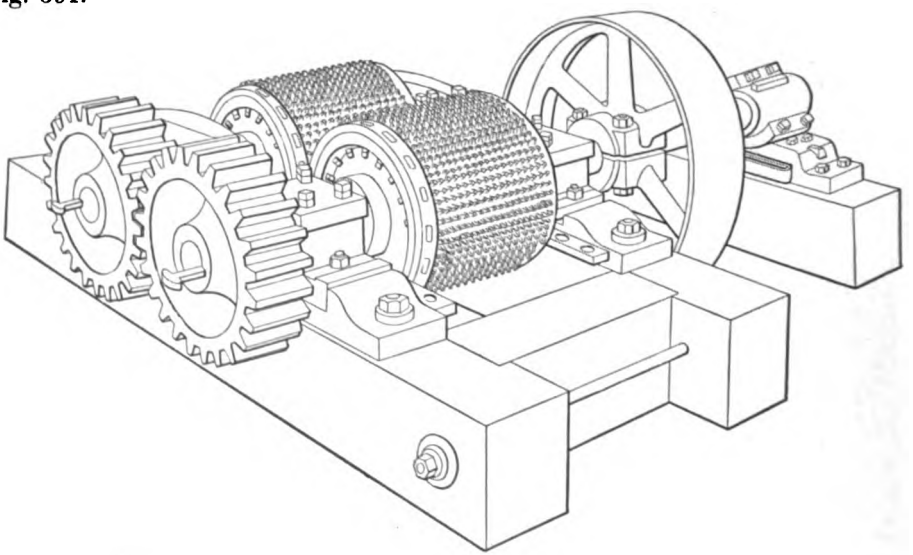

FIG. 591. — ALLIS-CHALMERS TOOTHED ROLLS. HOUSING REMOVED.

One roll is driven directly, and the second roll is geared to the first. The bases of the pillow blocks rest on sole plates fitted with adjusting keys to regulate the distance between the rolls, while this adjustment is made by means of a screw in the case of the corrugated rolls. To prevent breakage, in case a hard object gets between the rolls, there is an elliptical shell of cast iron between the movable bearing and the shoulder which supports it. This shell is only sufficiently strong to withstand the pressure due to crushing rock, and any undue strain causes it to break, allowing the rolls to move apart. The teeth are drop-forged, their points are tempered, and their shanks turned so that they are readily pressed into the holes in the roll body. The largest of the rolls with teeth are supplied with two alternating sizes of teeth.

Only one size of corrugated rolls is made by Allis-Chalmers: 6¾ inches diameter by 12-inch face. In plants using toothed rolls for coal crushing, it is customary to install two or three sizes. The larger rolls, which are termed the "main rolls," are from 24 inches diameter by 48 inches face to 42 inches diameter by 52 inches face. These rolls take material as large as the run of

mine coal, or lumps up to 12 and 16 inches diameter, and reduce it to about 2½ or 3 inches; and the smaller rolls, known as the "Pony," "Chestnut," and "Bone" rolls reduce it further. The velocity of the points of the teeth for anthracite coal crushing is about 1,000 feet a minute; for salt and phosphate, about 750 feet a minute. The teeth on the main rolls are usually arranged in rows opposite each other, while in the smaller rolls they are staggered. It is possible to fit a set of the smaller rolls with heavy teeth, staggered, so that they will take reasonably large pieces and reduce them quite fine. A reduction of from a maximum of 8 inches to 1 inch has been successfully effected by rolls 18 inches in diameter by 24-inch face; but this practice is not recommended as it is extremely hard on the rolls.

Data on the approximate capacity and horse-power of the toothed rolls are given by the Allis-Chalmers Company in Table 429.

TABLE 429. — CAPACITY, HORSE-POWER, ETC., OF TOOTHED ROLLS.

Diameter. Inches.	Face. Inches.	Capacity. Tons per Hour.	Horse-power.
15	20	10 to 20	5 to 10
24	18	30 to 50	15 to 20
27	36	50 to 90	20 to 25
36	36	100 to 200	30 to 35
40	42	175 to 225	40 to 45
42	50	250	50

Intermediate sizes of the toothed rolls, besides those shown in the first two columns, are available.

§ 955. STURTEVANT ROLL SHELL TURNING DEVICE. — A portable shell turning device[17] is manufactured by the Sturtevant Mill Company (see Fig. 592). A pulley *P* drives the fly-wheel of the rolls by means of the wooden roll *W*. The pressure delivered by the wooden roll is regulated by the screw *S*. The lathe tool *T* is made to fit the Sturtevant rolls, and is attached to the roll frame directly, when the tire may be turned true.

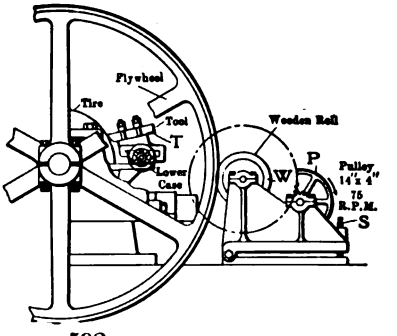

FIG. 592. — STURTEVANT ROLL SHELL TURNING DEVICE.

§ 956. TRUING ROLL SHELLS WITH AN EMERY WHEEL. — The Fried. Krupp Grusonwerk[8] also manufactures a device for grinding roll shells (see Fig. 588). The apparatus is mounted upon the machine frame and pressed against the rolls either by a counter-weight or by means of a spring. This device is an emery wheel, movably mounted in a bracket or standard and making 180 revolutions per minute. The rolls may be ground during the working of the mill whenever grinding is necessary.

§ 957. MATERIALS FOR WEARING PARTS. — Rolled-steel shells[2] are invariably used for crushing rolls to obtain the best results. Chilled iron has been used to some extent and is still used in some districts. The wearing life of rolled steel is usually so much better than of any other material that its use is becoming more and more general. Manganese steel[19] has been used to some extent for shells, but it does not seem to be as uniform in wearing qualities as the rolled steel. It tends to wear in grooves, and it is difficult to keep the

faces dressed as evenly as is desired. With roll shells 30 to 36 inches in diameter the shrinkage strain is enormous, and if the core in the mold is not removed quickly there is a possibility of a strain remaining in the metal, which does not become apparent as a crack until after the shells have been put into use. In other cases the material is softer and is more inclined to flow or peen out at the edges.

In the anthracite coal fields, manganese steel toothed rolls have practically displaced the inserted tooth roll, not only costing less than the inserted tooth roll, but lasting at least twice as long. Chilled cast-iron toothed rolls were also used extensively at one time, but, because of their short life, they are practically displaced by the manganese steel. Corrugated rolls made of manganese steel are also coming into use in the anthracite coal fields for crushing bony or slaty coal, and in working old culm piles for merchantable coal.

§ 958. LIFE OF WEARING PARTS. — Table 430 gives the wear on four pairs of rolls in use at Mill 139.[15]

TABLE 430. — LIFE OF WEARING PARTS.

	Part.	Material.	Life. Days.	Weight.		Cost. Cents per Pound. New.	Sells. Cents per Pound. Old.	Net Cost. Cents per Ton.
				New. Pounds.	Old. Pounds.			
No. 1 Rolls.	Shells	Latrobe Steel	112	5,124	674	8.35	0.68	0.883
	Cheek Plates	Cast Iron	112	60	30	8.7	0.68	0.0105
	Babbitt for Bearings		180	55	0	45.0	0.00	0.035
No. 2 Rolls.	Shells	Midvale Steel	137	10,416	704	5.22	0.68	0.872
	Cheeks	Cast Steel	137	110	60	8.70	0.68	0.0148
	Bushings	Bronze	360	45	0	33.0	16.5	0.00825
	Followers	Cast Iron	360	390	0	7.7	0.68	0.0166
No. 3 Rolls.	Shells	Midvale Steel	77	5,200	920	5.22	0.68	0.656
	Cheeks	Cast Steel	77	54	27	8.70	0.68	0.01115
	Bushings	Bronze	360	47	0	33.0	16.5	0.00862
	Followers	Cast Iron	360	390	0	7.70	0.68	0.0166
No. 4 Rolls.	Shells	Midvale Steel	95	17,285	7,655	5.22	0.68	1.872
	Cheeks	Cast Steel	91	80	40	8.70	0.68	0.0154
	Bushings	Bronze	360	40	0	33.0	16.5	0.00733
	Followers	Cast Iron	360	225	0	9.05	0.68	0.0113

Further details with regard to the life of wearing parts will be found under the description of Mills 144 and 173.

BIBLIOGRAPHY OF ROLLS.

1. Allis-Chalmers Company, Milwaukee, Wisconsin. Bulletin No. 1419.
2. Allis-Chalmers Company. Private communication dated March 26, 1907.
3. Allis-Chalmers Company. Private communication dated June 19, 1907.
4. Burgan, A. L., Hubbell, Michigan. Private communication dated July 9, 1907.
5. Colorado Iron Works, Denver, Colorado. Bulletin: Humphrey Rolls.
6. Denver Engineering Works Company, Denver, Colorado. Bulletin 1019-B.
7. Denver Engineering Works Company, Denver, Colorado. Private communication dated June 18, 1907.
8. Fried. Krupp Grusonwerk, Magdeburg-Buckau, Germany. Bulletin and blue-print of Krupp High Speed Rolls.
9. Goupillière, Haton de la (1897). Exploitation des Mines, Vol. II., p. 855. Discussion of the angle of friction, etc.
10. Humboldt Engineering Company, Kalk near Cologne, Germany. Bulletin describing Humboldt Crushing Rolls.
11. Inst. Min. & Met., Vol. X., (1901-1902), p. 234. Philip Argall. Paper entitled Sampling and Dry Crushing in Colorado.
12. McFarlane Manufacturing Company, Denver, Colorado. Catalogue of Parallel Rolls.
13. McLanahan and Stone, Hollidaysburg, Penn. Catalogue of machinery for Washing and Handling Hematite Ore, Phosphate Rock, etc.
14. Ninth Annual Report Mining Industry of Idaho for Year 1907, p. 59. Robert N. Bell. Note on Triplex Rolls. Said to have been used with great success for a period of over two years.

15. Potter, William C., Aguas Calientes, Mexico. Private communication.
16. Power and Mining Machinery Company, Cudahy, Wisconsin. Bulletin 28.
17. Sturtevant Mill Company, Boston, Massachusetts. Catalogue No. 65.
18. Sturtevant Mill Company, Boston, Massachusetts. Catalogue.
19. Taylor Iron and Steel Company, Highbridge, New Jersey. Information concerning steel for wearing parts. Private communication.
20. Triplex Roll Company, 1650 Champa St., Denver, Colorado. Catalogue of Triplex Rolls.
21. Utah Copper Company, Garfield, Utah. Blue-print of Immense Rolls, supplied by Power and Mining Machinery Company.

CHAPTER XXV.

STEAM, PNEUMATIC, AND SPRING STAMPS.

§ 959. STAMPS. THEIR PRINCIPLE, PURPOSE, AND CLASSIFICATION. — Stamps are probably the oldest form of device for crushing rock in preparation for concentration. They may be preliminary crushers, reducing the ore only so far that it may be easily and economically handled by the fine grinders, or they may be used as final crushers. In all cases they are generally fed with a product that has been reduced to a standard size by a preliminary breaker. The feed should always be automatic in order to obtain an even and constant supply of ore between the shoe and the die.

The stamp consists of a vertical stem with a shoe on the lower end striking on an iron or steel die. The ore, resting on the die, is crushed by the blow given it by the shoe. In order to limit the size of discharge from the battery where the ore is crushed, a screen is used. Material fine enough to pass through this goes on for further treatment. Coarse ore which has not been reduced sufficiently in size to pass through falls back under the stamp to be further reduced in size. Crushing is carried on either dry or wet, but, on account of the great amount of dust resulting from dry crushing, water is generally introduced. The water also greatly increases the capacity.

Stamps find their greatest field in crushing gold ore, when the metal is finely disseminated, and also for crushing native copper rock. They are used for re-crushing jig middlings and certain other classes of ore. It is, however, not advisable to use stamps for crushing ore where the mineral to be saved is brittle or occurs in large masses, on account of excessive sliming and consequent loss.

Stamps are grouped into different classes according to the way in which power is applied for striking the blow.

(*a*) *Steam stamps*, which are raised and forced down by means of a steam piston.

(*b*) *Pneumatic, hydraulic, and spring stamps*, which are raised and forced down by a crank, but cushion the shock to the stamp on the crank by an air cushion, water cushion, or spring.

(*c*) *Lever stamps*, which are lifted and forced down by means of a lever, with a spring to take up the shock and to give flexibility to the stamp.

(*d*) *Gravity stamps*, which are raised by cams, but drop by gravity. In this class the velocity is limited to that due to the force of gravity, while in others an outside accelerating force is added to gravity.

In this chapter will be treated stamps falling under the first three heads. Gravity stamps will be treated alone in a later chapter.

STEAM STAMPS.

§ 960. PRINCIPLES OF ACTION. — The steam stamp consists of a vertical stem which is raised and forced down by steam. To the top of the stem is fixed a piston which runs in a steam cylinder. A chilled cast-iron shoe is

attached to the bottom of the stem. The ore is broken between the shoe and a die which rests on the base of the mortar. The mortar has one or more screens to limit the size of the discharged particles. The ore is discharged with water through the screen which has an opening of from $\frac{3}{16}$ to $\frac{5}{8}$ inch. These stamps are exclusively used for crushing the native copper rock of the Lake Superior region. For a full description of steam stamps the reader is referred to Vol. I., pages 113 to 143 of Ore Dressing.

The Nordberg steam stamp [3] is the most important recent addition to the steam stamps for the native copper mills of Lake Superior. The following pages refer to the Nordberg stamp unless otherwise stated.

§ 961. FOUNDATIONS, ANVIL BLOCKS, MORTAR BEDS, SILLS, AND GIRDERS. — The stamp rests on a solid concrete foundation averaging 18 feet long, 18 feet wide, and 16 feet deep. The mortar bed or anvil block is shown in Fig. 593 and is composed of four parts. The base is rectangular and measures 9 feet by 11 feet 8 inches. The body, which is cylindrical, is made up of three horizontal sections whose outside diameter is 7 feet. These four pieces weigh about 80 tons, and rest directly on the foundation.

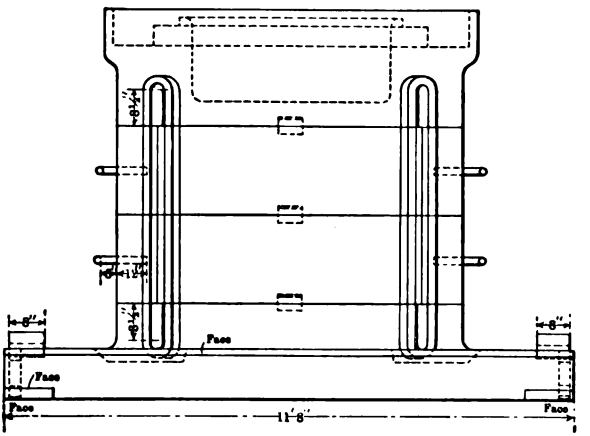

FIG. 593. — ANVIL BLOCK OF NORDBERG STEAM STAMP.

The mortar is a circular cup-shaped casting, 7 feet in outside diameter and 2½ feet high, in which the cavity is 4 feet in diameter and 2 feet deep. This mortar is provided with suitable lugs for fastening on the screen frame above by bolts, and the mortar block below by links. The screen frame consists of four distance pieces 2½ feet high, on which rests the top plate attached by bolts.

This screen (1), which is cylindrical, see Figs. 594*a* and *b*, is held between the mortar and the top plate (2). It is surrounded by a cylindrical splash guard (3) which has discharge openings at the bottom. The stamped stuff discharges through the screen and these openings into a trough (4) which is cast in the mortar block proper. This trough has replaceable liners, and discharges on opposite sides of the stamp into launders. The top plate is provided with openings for the stamp stem and for feeding the copper rock.

The frame is independent of the anvil block and rests on two sills and two girders, which in turn rest on the foundation. The sills are of a hollow box section; the main sills are 14 feet 2 inches long and the girders are 14 feet 9 inches long.

The frame (see Figs. 595*a* and *b*) consists of four heavy round columns, held together at the top by a rectangular casting which also serves as a support for the steam cylinder. The lower ends of the columns are bolted at the ends of the girders and the sills. These four columns support the guides by distance pieces and tie rods. These are placed about two-thirds of the way up the column and in addition to holding the guides in place, serve to stiffen the whole structure.

§ 962. PISTON, PISTON ROD, DASH POT, FLANGE, REVOLVING PULLEY,

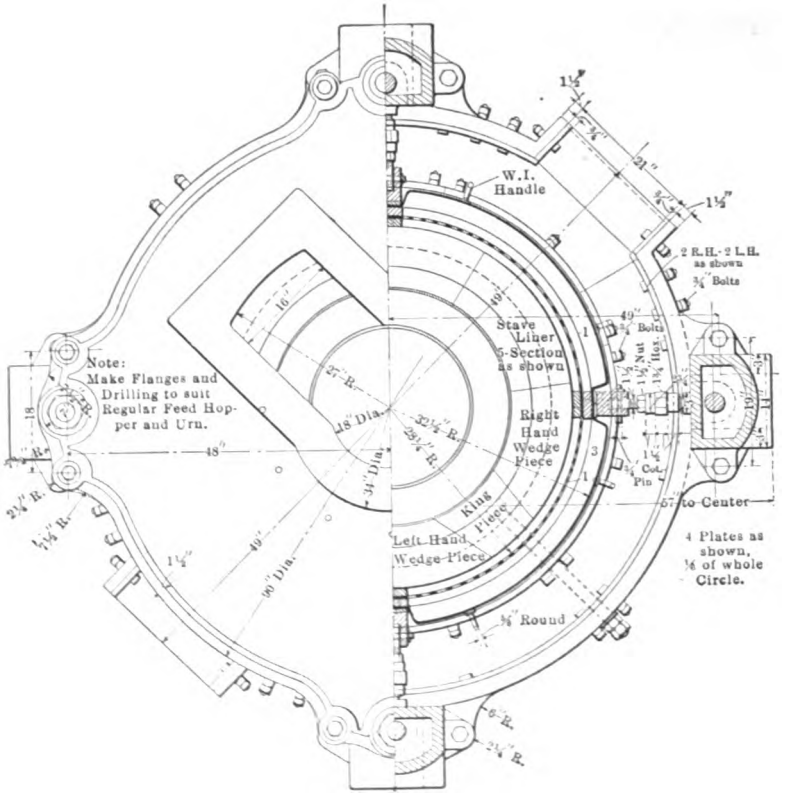

FIG. 594*a*. — PLAN.

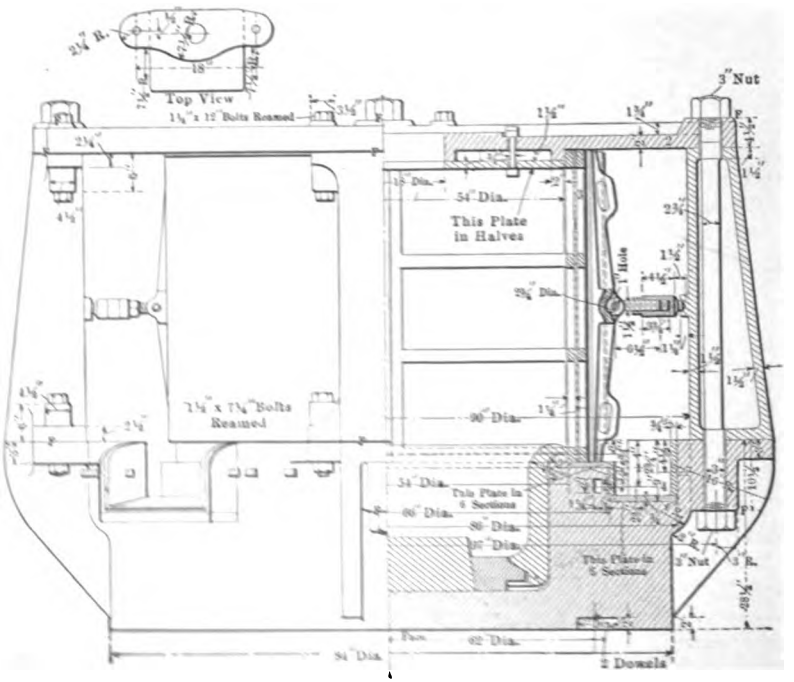

FIG. 594*b*. MORTAR OF NORDBERG STEAM STAMP.

STAMP STEM, STAMP SHOE. — These parts are put together, proportioned, and used as has been described in Vol. I., Ore Dressing. Their total weight is 5,500 pounds.

§ 963. STEAM CYLINDER, VALVES, AND VALVE GEARS. — The Nordberg Manufacturing Company builds both single and compound cylinder steam stamps.

§964. SINGLE-CYLINDER STAMPS. — The cylinder is generally 20 inches in diameter with a 24-inch stroke. It is fitted with 4 valves of the Corliss type, each of them driven by its own eccentric. The valve arm, instead of being keyed to the valve stem, is held in place by an adjustable connection. In this

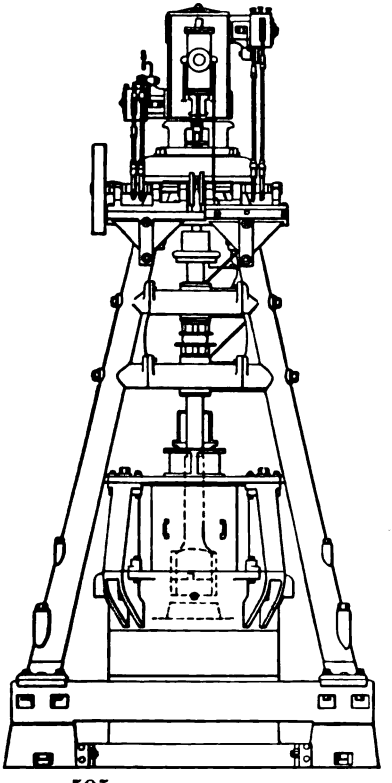

FIG. 595*a*. — NORDBERG STEAM STAMP.

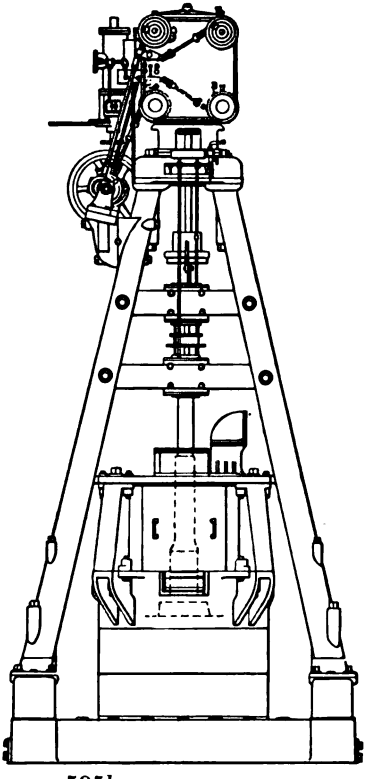

FIG. 595*b*. — SIDE ELEVATION.

way all the valves are independent of each other, and each one can be set and adjusted so as to give the best results. This is a very simple operation, as the lap can be changed by turning two set screws in the adjustable connections between the valve stem and the valve arm, and the angular advance can be changed by turning the eccentric on the shaft to which it is clamped.

In order to show clearly the valve setting at all times, there is a brass dial representing a cross-section of the valve seat and port, fastened on the end of the valve bonnet. Inside of this dial there is a second dial representing a cross-section of the valve; the inner dial being carried by the valve stem. The relative positions of these dials show the valve positions at all times. The graduations which are provided also indicate the amount of lap. The

exhaust valves are driven through wrist plates; the inlet valves are driven direct from the eccentrics. The eccentrics for the bottom of the cylinder are mounted on a shaft driven at a uniform speed by a belt from an independent engine. The eccentrics for the top of the cylinder are mounted on a second shaft driven from the first shaft by a drag link called disc and link motion. The center of this second shaft is offset, thus causing the second shaft to move at a non-uniform speed. This gives the top valves very quick opening and closing motions.

The throttle valve is made with separate passages to the top and bottom valves. The steam to the bottom of the cylinder can be throttled to any desired extent. A stamp of this type having a cylinder 20 × 24 inches was tested by Prof. O. P. Hood at Mill 181. The results were as follows: Boiler pressure, 118.8 pounds per square inch; strokes of stamp per minute, 102.8; weight of stamp, 5500.0 pounds; vacuum (absolute pressure), 3.6 pounds per square inch; tons of rock per ton of coal, 61.61 tons; tons of rock per 24 hours, 550.4 tons; tons of rock per horse-power-hour 0.1164 tons.

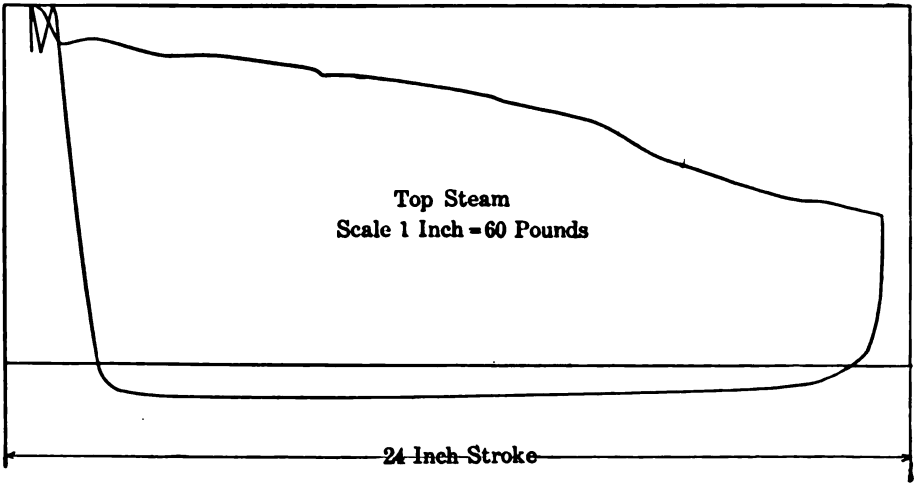

FIG. 596*a*. — INDICATOR DIAGRAM. TOP STEAM NORDBERG 20 BY 24-INCH STAMP.

The coal consumption is for driving the stamp head only, and does not include the pump or mill engine.

The coal contained 2.89% moisture and 5.90% ash and clinker. The steam contained 0.6% moisture. The rock crushed was Kearsage amygdaloid. Diagrams taken in this test are given in Figs. 596*a*, 596*b*, and 596*c*.

§ 965. CROSS-COMPOUND STAMPS. — Some stamps operating on the above principle have been built cross-compounded. These are not used at present partly because the clearance under the pistons is large, but mainly because the two cylinders are on separate stamps. There are frequently periods in which one stamp must be out of commission in order to change a shoe, and when this happens both stamps must be stopped, causing great waste of time.

§ 966. TANDEM OR STEEPLE-COMPOUND STAMPS. — The most recent design of the Nordberg steam stamp is the tandem-compound type, also called steeple-compound, see Figs. 597*a* and *b*. The sill, mortar frame, etc., are the same in this type as for the single-cylinder type. The high-pressure cylinder is

placed on the top of the frame and the low-pressure on top of the high-pressure cylinder. The high-pressure cylinder takes steam on both sides of the piston, while the low-pressure takes steam only on the down stroke. Steam from the high-pressure cylinder is exhausted into a receiver from which it passes to the low-pressure cylinder. The piston clearance in the lower end of the cylinder of

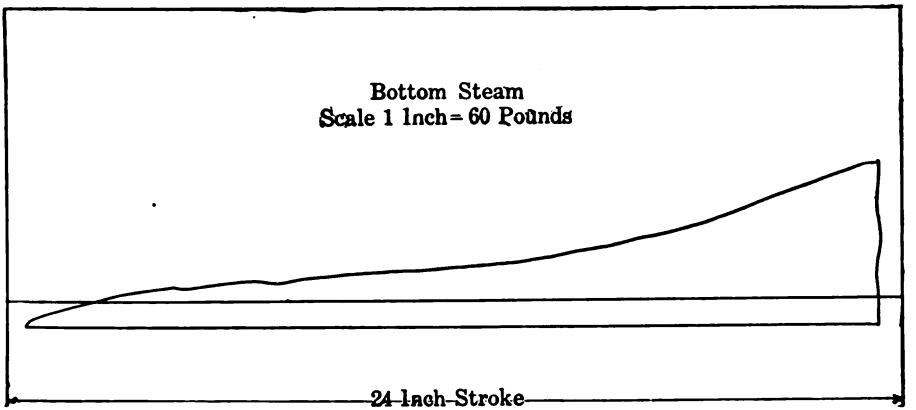

FIG. 596*b*. — BOTTOM STEAM. NORDBERG STAMP.

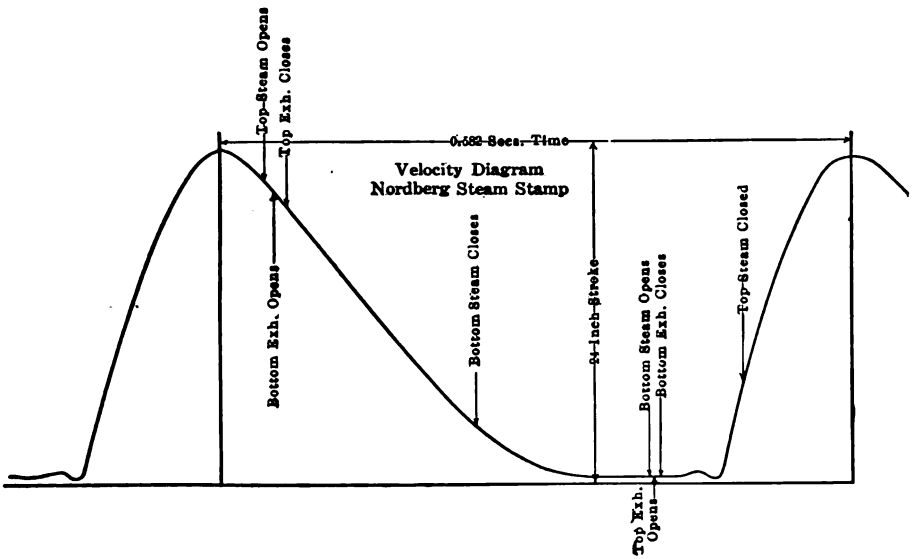

FIG. 596*c*. — VELOCITY DIAGRAM.

a steam stamp is, as a rule, very large, as it must be made to suit a worn-down shoe and die. When new shoes and dies are put in, the clearance is of course increased. In addition to this, the depth of rock on the die adds to the clearance. It is therefore evident that the making of the low-pressure cylinder, single-acting, is better policy than trying to run it double-acting, with the consequent large clearance space. The above stamp has therefore a greater efficiency than either a single-acting or a cross-compound stamp.

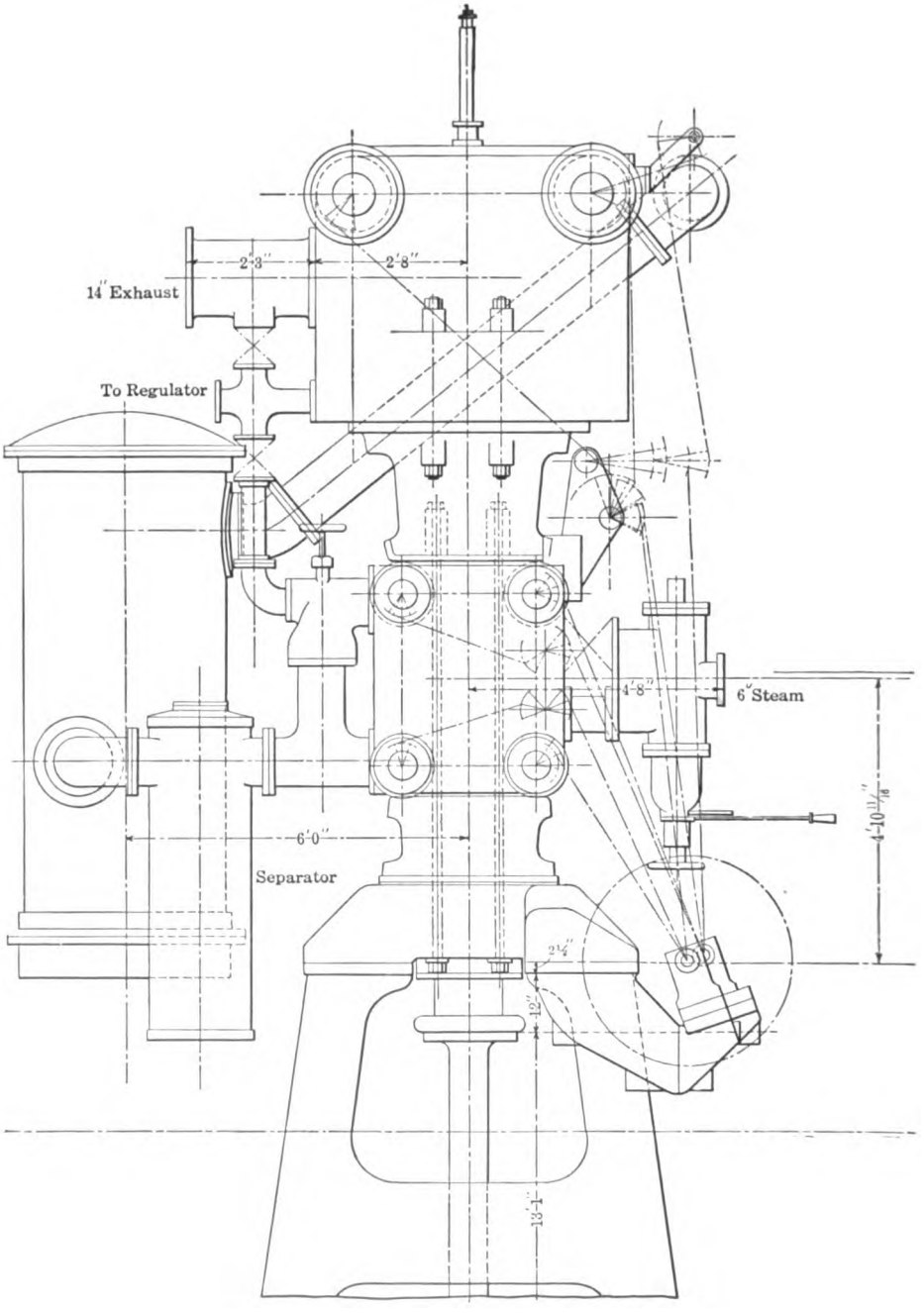

FIG. 597*a*. — NORDBERG STEEPLE-COMPOUND STAMP.

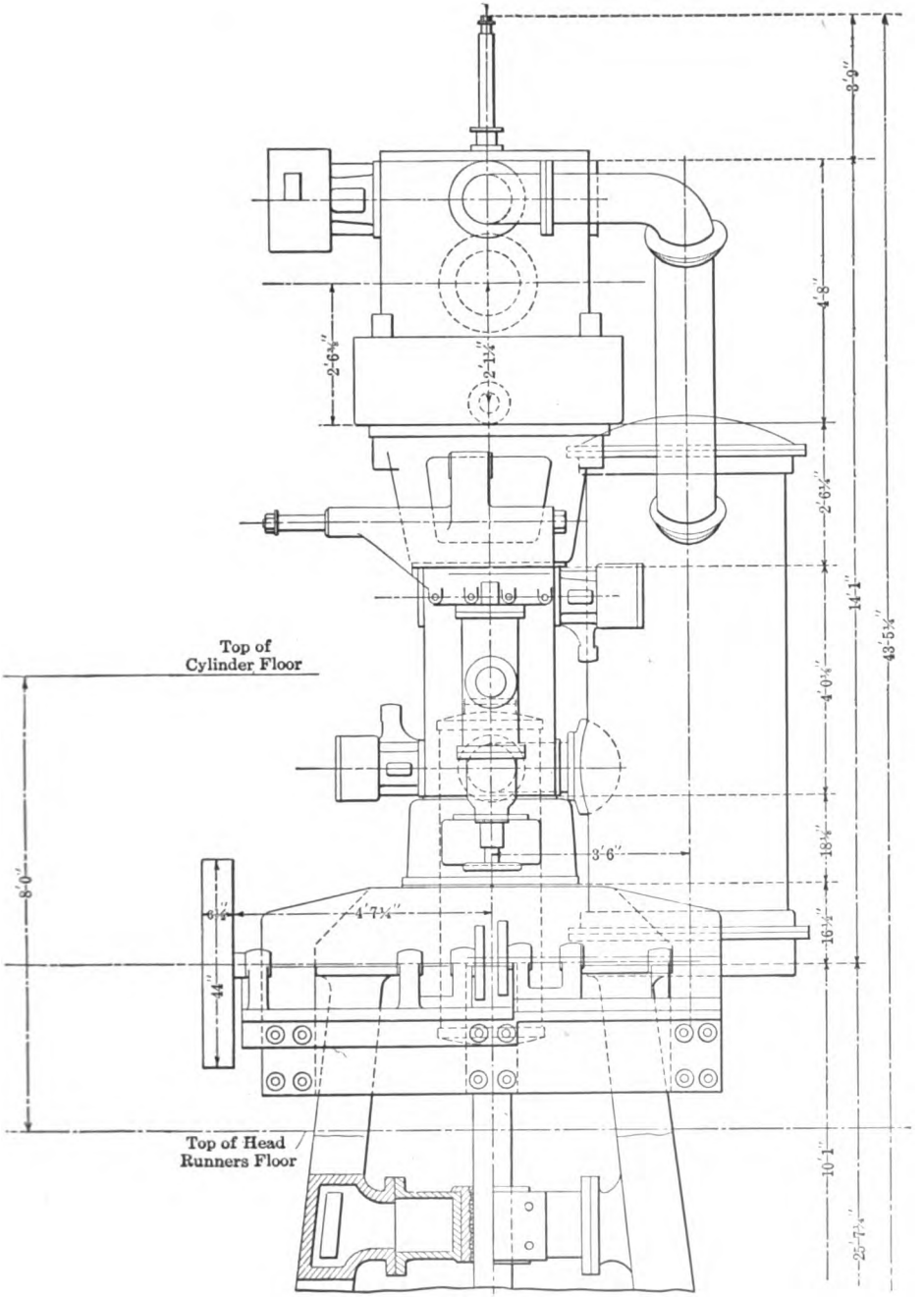

FIG. 597*b*. — NORDBERG STEEPLE-COMPOUND STAMP.

The high-pressure valve gear is the same as for the single-cylinder machine. The low-pressure valves are driven from the first motion shaft through wrist plates, and the inlet valve is fitted with releases, gear, and dash pot.

Diagrams taken from a stamp of this type are shown in Figs. 598*a*, *b*, and *c*. In the case of the stamp tested, the total striking weight was 7,480 pounds, the area of the shoe 285.63 square inches, and the weight of the stamp per square inch of area was 27.5 pounds. The steam pressure was 150 pounds, and the stamp was making 103 drops per minute.

§ 967. COMPARATIVE PERFORMANCE OF SINGLE AND COMPOUND-CYLINDER NORDBERG STAMPS. — The test, the results of which are given in Table 431, was made on stamps running at Mill 181 crushing Kearsage amygdaloid. Each test covered a period of 24 working days.

TABLE 431. — COMPARATIVE TEST ON SINGLE AND COMPOUND NORDBERG STAMPS.

	Single.	Compound.	Difference.	
			Units.	Percent.
Tons rock per ton of coal	62.8	88.3	25.5	40.6
Tons rock per 24 hours	554.5	709.3	154.9	28
Steam pressure pounds per square inch	118	148	.....	.....
Steam cylinders' diameters and stroke in inches	20 by 24	{ 15½ by 24 { 32 by 24	.....	.....

The tests were made with great care in order to compare the two types of stamps, and as a result of these tests the Osceola and Tamarack mills were rearranged so that only steeple-compound stamps were used. The Osceola altered seven and the Tamarack five single stamps, making them steeple-compound.

Tests have also been made with the Nordberg steeple-compound stamps in comparison with their single-cylinder stamps at Mill 180. In this mill there were substituted steeple-compound cylinders for the plain cylinder. The work of changing the stamp mill was to be paid for by the saving effected by the compound stamps, and the agreement was that the compound stamps should be charged with whatever extra labor or repairs and lubrication they would require in excess of that necessary for a single stamp. The changes were paid for in less than two years.

In the latest designs of steam stamps a removable bushing is introduced in the cylinders. This makes a very convenient arrangement, as the bushing can be replaced quickly when worn, doing away with the necessity of reboring the cylinders. This plan is used both in the simple and in the compound stamps.

An efficient indicator is absolutely necessary on a stamp in order that its efficiency may be determined and the valves properly adjusted. It is also necessary that the indicator motion be such that it shows the clearance on every card. For this purpose an indicator is used very much like the original Watt design, which has, instead of the revolving drum, a sliding table operated by a rod positively connected to the stamp shaft. There are stationary marks on the guides of this table, the relation of which to marks on the table itself indicates the clearance in the cylinder, the two sets of marks corresponding when the piston touches the head.

The efficiency of the compound stamps depends very greatly upon the perfect vacuum which can be maintained on the under side of the low-pressure piston. In this space is maintained, by means of a device known as a reculator, practically the same vacuum as in the condenser. By examining indicator

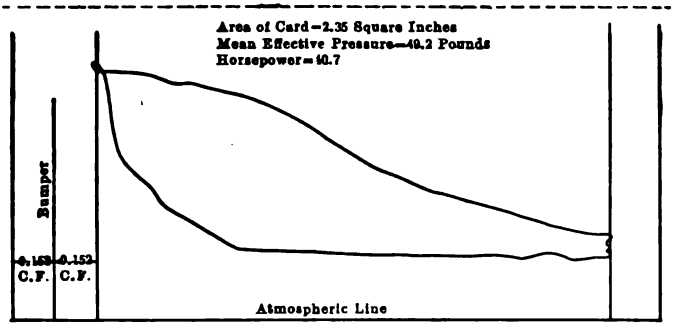

FIG. 598*a*. — HIGH-PRESSURE BLOW CARD.

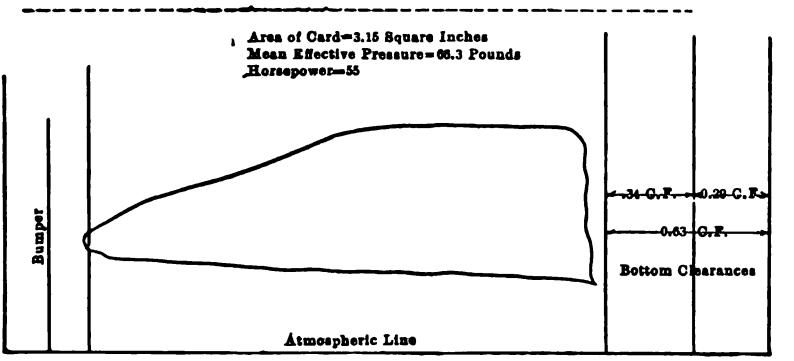

FIG. 598*b*. — HIGH-PRESSURE LIFTING CARD.

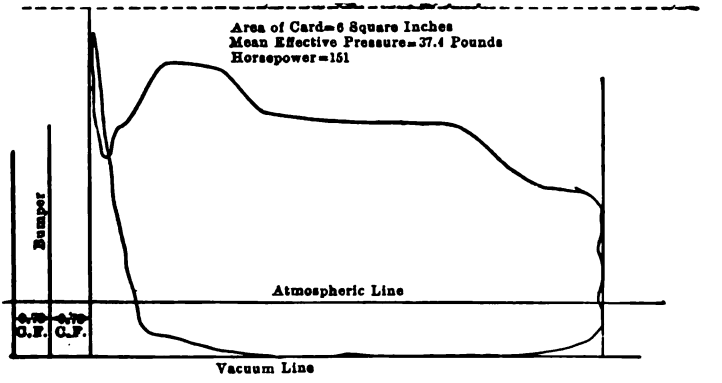

FIG. 598*c*. — LOW-PRESSURE BLOW CARD.

cards from older types of stamps, it is seen that an absolute back pressure averaging from 5 to 8 pounds exists; and experiments show that by carrying a better vacuum, a correspondingly lower back pressure is not obtained. This is largely due to the high velocity of the stamp shaft when it goes down, causing correspondingly high speeds in the exhaust ports. If this back pressure could be removed in a single-cylinder stamp, there would be a very material increase in efficiency. On the lower side of the low-pressure piston of a compound stamp there is no exhaust, and consequently it is easy to maintain therein a vacuum nearly as high as that in a condenser. This, of course, produces a much stronger blow.

§ 968. It may be of interest to compare the above figures with a test made at Mill 182[4] upon a steam stamp of the Allis-Chalmers type. This stamp had 24-inch cylinder with 25-inch stroke and made 102.9 strokes per minute, using steam at 100 pounds pressure. The results obtained are given in Table 432. Mill 182 is reputed to be using a simple stamp made in their own shops which is giving satisfaction. This stamp has 20-inch cylinder with 25-inch stroke, makes 107.58 strokes a minute, and uses steam at 142 pounds pressure. The capacity of this stamp is given at about 1,000 tons per 24 hours. It must, of course, be taken into account that the rock crushed by these stamps is softer than the Kearsage amygdaloid which is crushed at Mill 181. For other details concerning steam stamps at various mills the reader is referred to the descriptions of Mills 177, 178, 179, 180, 181, and 182 in Chapter XLI.

TABLE 432. — TEST OF SIMPLE STAMP AT MILL 182.

Running Time.				Tons of Rock.
Stopped for Repairs.		Actual Time Run.		
Hours.	Minutes.	Hours.	Minutes.	
	20	23	40	778.125
	20	23	40	760.975
	30	23	30	718.725
2	10	21	50	724.250
	30	23	30	791.725
1	10	22	50	792.350
Total 5		139		4566.150

Time stopped for repairs, 5 hours; actual time run, 139 hours; tons of rock stamped for the week, 4566.150; tons of rock stamped a day actual, 761.025; tons of rock stamped per 24-hour run, 788.00; steam pressure, 135 pounds per square inch.

§ 969. DISCHARGES FOR STEAM STAMPS. — For discharging nugget copper from the mortars of steam stamps while the stamps are in operation two kinds of discharges are used: the Krause mortar discharge and the mortar jig discharge.

The Krause mortar discharge consists of a 4-inch pipe entering the side of the mortar 12 inches above the die and half-way up the staves. The pipe slopes down outwardly at an angle of about 45° and has a side pipe entering through a tee and admitting a steady flow of water; in fact it is a hydraulic classifier. The splash and turmoil in the mortar continually bring nuggets of copper and pieces of rock into the entrance of the pipe at the upper end. The copper nuggets can find their way down to the lower end of the pipe against the rising current of water while the rock fragments cannot do so. At the lower end there is a device something like a molasses spigot. The nuggets are drawn off periodically by opening this. In one of the amygdaloid mills of the Lake Superior district, 12.83 % of the total copper in the rock fed to

the steam stamps is saved by the Krause discharge in a product assaying 96% copper.

The Mortar jig has within the mortar four jigging sieve boxes, two on each side of the mortar. The jigging sieves are about 4 inches by 12 inches with 1-inch holes and a depth of about 6 inches. The top of the sieve boxes is about 15 inches above the die. The four plungers, 6 × 12 inches in size, are outside the mortar and are operated by eccentrics much as in an ordinary jig. A plug opens above the screen for removing large nuggets and a gate opens below for removing small nuggets from the hutch. The amount of copper saved by this device is far beyond what formerly was obtained when the nuggets were only removed at the time of changing a shoe.

Pneumatic Stamps.

§ 970. The stamps in this class stand intermediate in position between gravity and steam stamps. They possess the relatively light weight of the former and are designed to strike the heavy blow of the latter. Owing to the excessive wear to which these stamps are subjected, the repair bill has been found in general to be much against them. The stamps are operated by a crank, connecting rods, cross-head, and cylinder. Compressing the air in the cylinder cushions the shock on the crank, and provides for the variable height of the charge in the mortars.

The aim is to strike the blow before the crank reaches its lowest point. This necessitates the use of the cushion as the depth of the ore varies, and some sort of a safety device to prevent breakage in case a pick point or other hard unyielding object should get into the battery. It has been a problem to invent this device for cushioning. For the above reasons this type of stamp is not gaining ground. Several types are shown in Vol. I., pages 140 to 143.

Hydraulic Stamps.

§ 971. Stamps under this head work on about the same principle as the pneumatic stamps, with the exception that a water cushion is used. The Denny stamp[1] has a water cushion as a new device, and is actuated by a crank, connecting rod, etc. It was invented by George A. Denny, who ran it in the Witwatersrand very successfully.

Referring to the detail section, Fig. 599*a*, *A* is the crank shaft which is connected to cylinder *B* by a crank arm, causing the cylinder to reciprocate. Each cylinder is cast with an annular space B_1 in it. An opening B_2 connects this with the lower end of the cylinder. A gland B_3 and stuffing box B_4 serve as

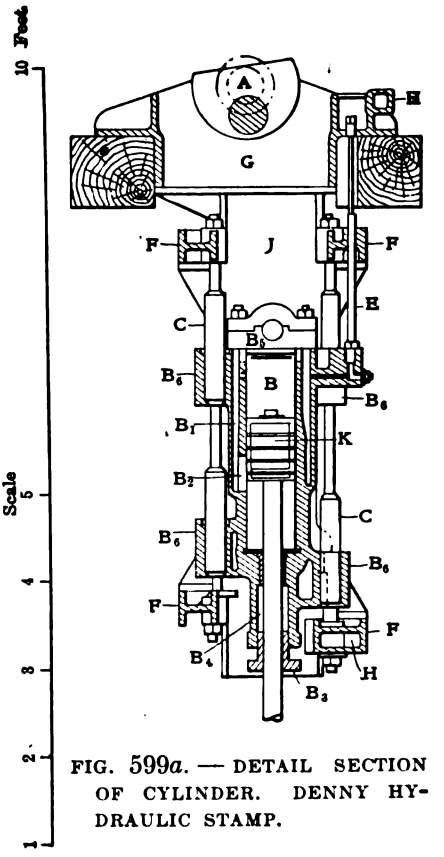

FIG. 599*a*. — DETAIL SECTION OF CYLINDER. DENNY HYDRAULIC STAMP.

the upper guides. Water is supplied to the water chamber B_1 by a telescopic connection E. The bottom end of the cylinder has an outlet for surplus water. This outlet has a telescopic pipe leading to a water channel in the lower stem guide, and has a screw plug at the side, by opening which the stamp is brought

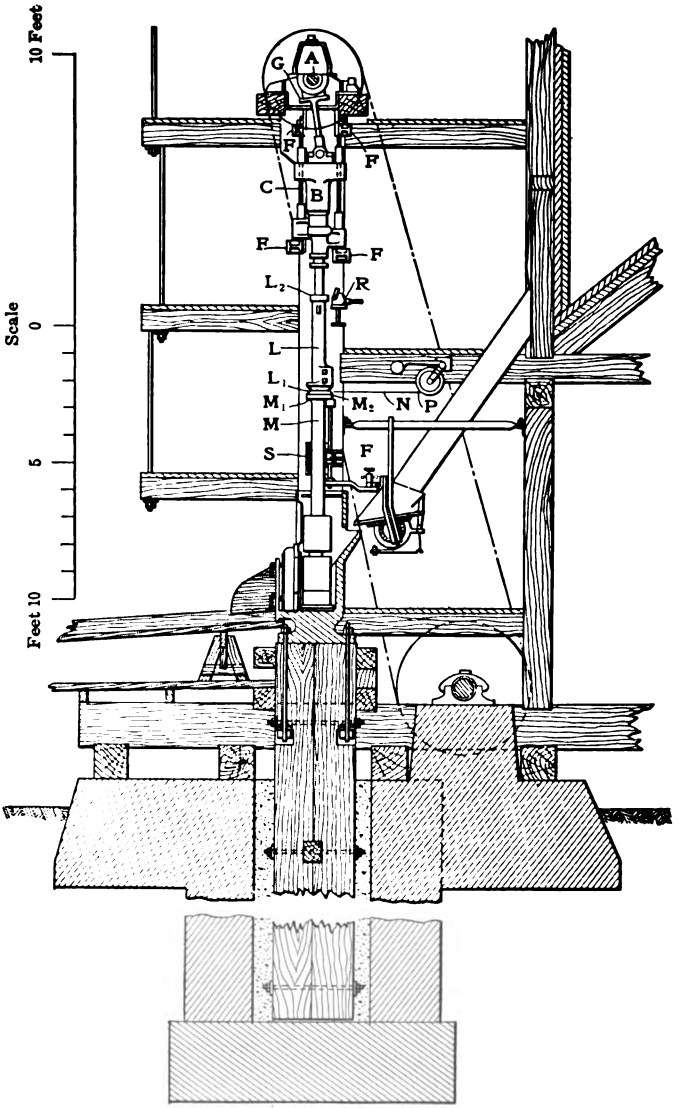

FIG. 599*b*. — CROSS-SECTION. DENNY HYDRAULIC STAMP.

to rest. Four guide sleeves B_6 are provided, which slide on guide rods C. The whole arrangement is supported by a plate G, attached to the king posts. The bottom end of the piston rod is tapered and driven tight into a cast-iron adjusting sleeve L and is further secured by a cotter. In Figs. 599*b* and *c*, the lower end of the sleeve L is bored out to take the top of the stem M, the stem being held in position by a gib and key. A collar M_1 is forged on this

stem just below the sleeve L. This collar prevents the stem from slipping up the sleeve and allows the compensating washers M_2 to be inserted between the collar and the sleeve to take up wear. They also keep the total length of the falling parts nearly constant. A groove L_1 in the sleeve permits of an

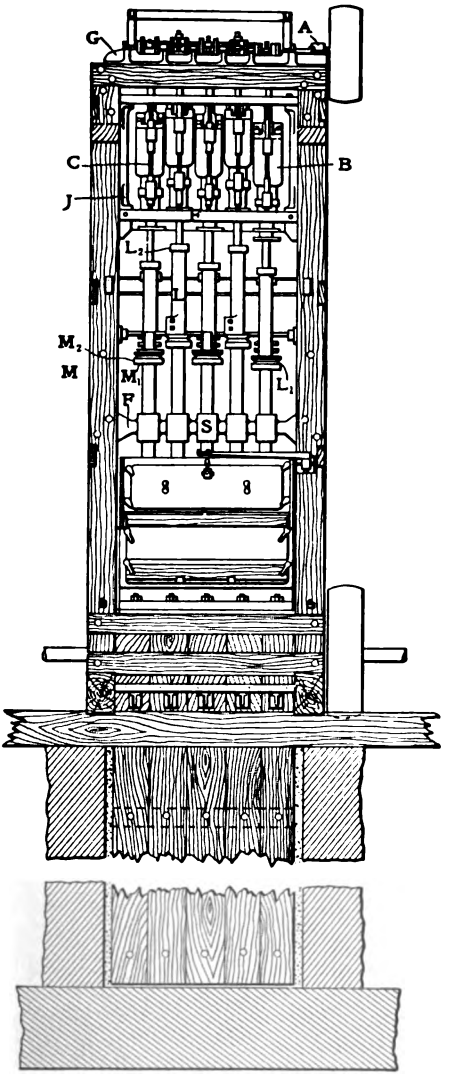

FIG. 599*c*. — ELEVATION DENNY HYDRAULIC STAMP.

endless chain turning the stem. The top end of the sleeve is also flanged and the stem is hung up by this projection. The stamp is turned by means of the groove L, the chain N, and a rachet and pawl which works in but one direction. The lower guides are shown in Fig. 599*d*. The action which takes place during one cycle of the cylinder is as follows:

The stamp, when resting on the die and having the cylinder at the bottom of the stroke, opens the water port, admitting water to the bottom of the cylinder. As the cylinder ascends, the port is gradually closed owing to the piston remaining stationary. The water consequently being forced partly through the gradually closing port into the water chamber, and partly through the passage into the hollow piston, compresses the air in the latter. As the port closes and the velocity of the cylinder increases, the pressure of the air in the hollow piston gradually increases until it is sufficient to raise the stamp at the speed with which the cylinder is then moving. This "pick up" of the stamp is not instantaneous owing to the cushioning effect of the air and water. The piston and cylinder then continue to move together, and, as the cylinder velocity increases until about mid-stroke, the air in the hollow piston, which has a pressure due to the maximum accelerating force exerted by the cylinder on the piston, re-expands after mid-stroke is passed, and does work on the piston,

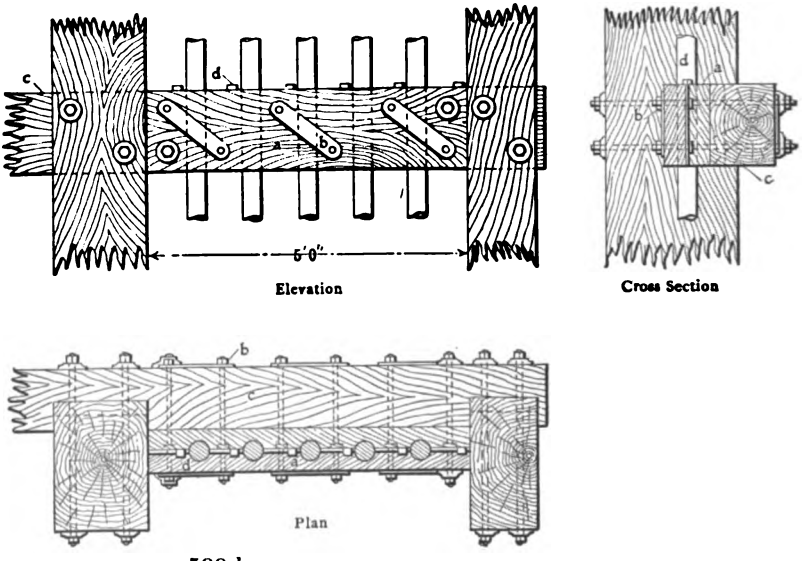

FIG. 599*d*. — GUIDE BLOCK OF DENNY STAMP.

sending it upwards at a greater speed than that of the cylinder. When the cylinder reaches the top of its stroke, it stops momentarily, but the piston, owing to its acquired momentum, continues its upward course for a certain period. Before the piston reaches its highest point, the cylinder has begun its downward stroke; consequently the water port is opened and water is admitted to the bottom of the cylinder. The piston descends freely and independently of the cylinder, and, as it descends under the action of gravity, its speed gradually increases over that of the cylinder, and the water is driven through the open port back into the water chamber. The stamp strikes the ore before the cylinder reaches the bottom of its stroke; consequently the cylinder overruns the piston, thus opening the water port again, admitting water into the cylinder to make up any deficiency, and the cycle is repeated. As in the first half of the downward stroke the cylinder velocity is greater than the piston velocity, it follows that the friction of the walls of the cylinder against the piston, and of the gland and stuffing box against the piston rod, gives the stamp an increased momentum over that produced by the action of gravity

alone. This increased momentum is such that in the lower half of the downward stroke, when the piston is moving at a greater velocity than the cylinder and the friction of the parts mentioned is retarding the motion of the piston, the final blow of the stamp on the ore is greater than if the stamps fell through the action of gravity alone.

In practice the work of this stamp has been satisfactory in all respects but one, namely, the cost of maintenance of the pistons. The mill under Mr. Denny's charge gave on an average 124 blows a minute, as against an average of 100 blows by gravity stamps. The average capacity being between 9.2 tons per stamp per day when new shoes and dies were on, and 8.4 tons when they were worn. No trouble was found with the cranks or connecting rods. The power required to operate the five stamps was slightly in excess of that needed for 10 gravity stamps.

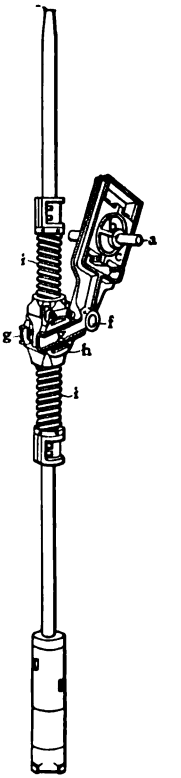

FIG. 600. — RAPID ECONOMY STAMP. OPERATING MECHANISM.

Lever Stamps.

§ 972. The stamps under this head are raised and forced down by a lever and sliding block with springs to act as a flexible connection between the lever and the stamp stem and also to absorb the vibrations of the stamp.

§ 973. Rapid Economy Stamps.[2] — The basic principle of the Rapid Economy Stamp is that instead of raising the stamps by cams as in the California type, the stamps are operated by a lever, eccentric, and sliding block. The operating mechanism is shown in Fig. 600.

The eccentric *b* on the eccentric shaft *a* turns inside of the yoke *c*. This causes the lever to oscillate backwards and forwards around the shaft *f* as a center. The forks *g* are connected to the cross-head *h*. This cross-head is attached to the stem as shown in the cut. As the eccentric rotates, it causes the forks *g* to rise and fall alternately, and the stamp to reciprocate.

The springs *i* being balanced do not cause the blow. They cushion the stamp and permit of "take up" as the thickness of the shoes and dies vary. They also act as a safety device in case a nut, pick point, or other hard, unyielding material is fed into the battery, besides causing the stamps to rotate.

The writer has found in his visits to mills and study of concentrating machinery, that machines which have helical springs connecting their reciprocating parts are not looked upon with favor by the mill men. The writer is not informed whether the spring has given trouble in this stamp.

The use of the lever permits of a very hard blow being struck, and allows from 200 to 225 drops a minute.

The makers claim large capacity and small power consumption for this stamp.

Bibliography of Pneumatic, Hydraulic, Spring, and Lever Stamps.

1. Private communication and pamphlet entitled "Design and Working of Gold Mill Equipment," by G. A. Denny.
2. Private communication and catalogue from Rapid Economy Stamp Mill Company, San Francisco, California.

Bibliography of Steam Stamps.

3. Nordberg Manufacturing Company, Milwaukee, Wisconsin. Blue-prints and details concerning tests.
4. Shields, James W., Hancock, Michigan. Private communication regarding Quincy stamp mills, steam stamps, etc.

CHAPTER XXVI.

GRAVITY STAMPS.

§ 974. PRINCIPLE OF ACTION. — Gravity or drop stamps are lifted by cams and fall by gravity. For a full discussion of gravity stamps, see Ore Dressing, Vol. I., pages 144 to 230. Gravity stamps, besides finding an extended use in the crushing of ores for amalgamation, cyanidation, or concentration, are finding use for re-crushing middlings from jigs and other concentrating machines. In some localities, for example, in Clear Creek County, Colorado, mill men[19] consider stamps with low discharge to be the best kind of a re-crushing apparatus.

G. Caetani,[3] see Table 433, gives a comparative sizing-assay test of products resulting from the crushing of jig middlings; first, by stamps, and second, by Huntington mills. This table may serve as a comparison between the kind of work done by stamps and that done by Huntington mills. Apparently there is very little difference in the results produced. The reasons given by mill men for preferring stamps are that stamps require less attention and fewer repairs. Some mill men declare that less sliming results from the use of stamps. This undoubtedly may be true in the case of some ores.

TABLE 433. — STAMP VERSUS HUNTINGTON MILL. COMPARATIVE SIZING-ASSAY TEST OF PRODUCTS OF BOTH MACHINES CRUSHING JIG MIDDLINGS.

Mesh.	Percent. Sand.	Cumulative Percent. Sand.	Lead Assay. (Reduced.)	Lead. Units.	Cumulative Lead. Units.
STAMP PRODUCT.					
10	0.0				
20	1.4	1.4	4.9	0.7	0.7
40	16.2	17.6	3.7	6.1	6.8
60	10.4	28.0	4.7	5.0	11.8
80	11.1	39.1	6.0	6.7	18.5
100	6.7	45.8	6.9	4.7	23.2
150	9.1	54.9	8.7	8.1	31.3
200	4.5	59.4	9.9	4.6	35.9
7 mm.*	2.8	62.2	32.5	9.3	45.2
3 " *	7.3	69.5	18.0	13.4	58.6
+.03 " *	26.0	95.5	13.5	35.7	94.3
−.03 " *	4.5	100.0	12.5	5.7	100.0
Total	100.0			100.0	
HUNTINGTON PRODUCT.					
10	0.0				
20	1.0	1.0	4.5	0.4	0.4
40	24.0	25.0	5.1	12.1	12.5
60	14.0	39.0	8.8	12.4	24.9
80	12.8	51.8	7.9	9.9	34.8
100	5.8	57.6	9.3	5.4	40.2
150	9.3	66.9	12.2	11.3	51.5
200	3.0	69.9	11.4	3.4	54.9
7 mm.*	2.7	72.6	32.5	8.8	63.7
3 " *	7.2	79.8	13.8	9.9	73.6
+.03 " *	19.0	98.8	13.2	24.9	98.5
−.03 " *	1.2	100.0	12.5	1.5	100.0
Total	100.0			100.0	

* Classifier rising current in millimeters per second.
Assay of Stamp mill pulp gives 9.48 percent lead.
Assay of Huntington mill pulp gives 8.03 percent lead.

§ 975. Gravity stamps are a very old form of crushing device, and the improvements that are noted in this chapter are modifications in detail, but do not change the fundamental principle. What follows is, therefore, intended to supplement that which has already been said concerning gravity stamps in Ore Dressing, Vol. I.

§ 976. MORTARS. — As has been stated in Vol. I., § 140, mortars are boxes of cast iron or wood and cast iron in which the operation of stamping takes place. The individual mortar which does away with the 5-stamp mortar and substitutes a separate mortar for each stamp has undergone a considerable development since Ore Dressing appeared. When using this device screens are generally placed on the four sides. This decreases the slimes made, and increases the capacity. A few of these special forms of mortars will next be described.

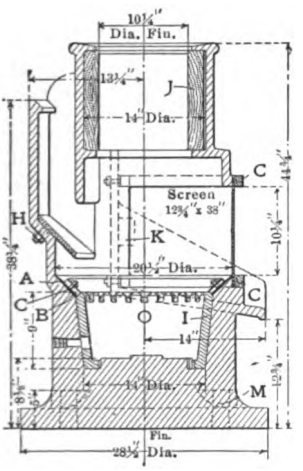

FIG. 601*a*. — NISSEN TYPE "AA" MORTAR.

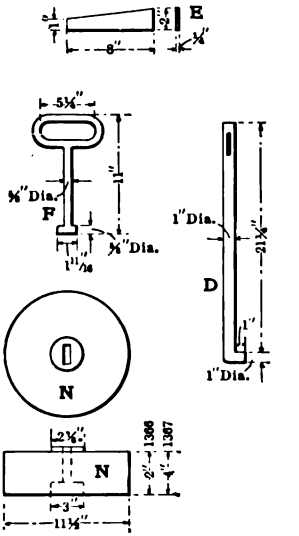

FIG. 601*b*. — ACCESSORIES.

KEY TO FIGS. 601*a* AND 601*b*.

A	Copper plate.	H	Bolt for wearing-plate with nut.
B	Shield for copper plate.	I	Liner.
C	Screen-band with nuts, wood lining, and screws.	J	Lining for head in segments.
D	Lifting-rod.	K	Vertical screen fastening.
E	Wedge for lifting-rod.	L	Wearing-plate.
F	Wrench for false dies.	M	Mortar.
G	Bolt for shield with nut and distance piece.	N	False die.

§ 977. THE NISSEN STAMP. — The Nissen stamp [11] is of the individual-mortar type and has a circular mortar. The advantages of a circular, individual mortar are as follows: 1. They can be fed by separate feeders, assuring an even feed to each stamp. 2. A maximum crushing effect is obtained as the ore is fed directly upon each die and there is no chance for the ore to bank in corners. 3. The advantage of a circular screen is obtained. The area of discharge of a Nissen stamp is about three and one-half times as much as in the case of each stamp of the ordinary five-stamp battery. The screening surface is always at right angles to the splash and the discharge of the ore, increasing the rate of discharge and giving greater capacity. 4. A stamp can be repaired without interrupting the other stamps.

The circular mortar is cast in one piece or in sections, and is lined with a circular steel wearing plate, cast in one piece (see Fig. 601*a*). This liner is

placed in the mortar before inserting the die, and is thus held in place without bolts or keys. The feed throat also has a steel wearing plate which is secured by bolts. A hand hole is provided in front of the mortar for the removal of chips or other material that may clog the screen. This makes it unnecessary to remove the screen and saves much time.

The type "B" mortar, Figs. 602*a* and *b*, is similar to the modern rapid-crushing, low-discharge type of ordinary, rectangular, five-stamp battery mortar. A circular form of chuck block is used to regulate the height of discharge, faced on the inside with special cast-steel liners. The screen of the type "B" mortar is considerably closer to the stamp than in the preceding type, as no inside amalgamating plate is provided for. This makes it a much more rapid crusher.

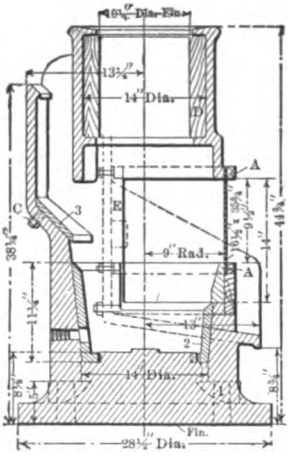

FIG. 602*a*. — NISSEN TYPE "B" MORTAR.

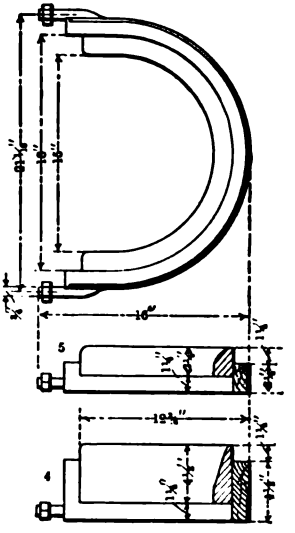

FIG. 602*b*. — CHUCK BLOCK AND SCREEN BANDS.

KEY TO FIGS. 602*a* AND 602*b*.

1 Mortar.
2 Liner.
3 Wearing-plate.
4 4½-inch chuck block with steel band, wood lining, screws, and nuts.
5 2½ " " " " " " " " " " " "
A Screen-band with wood lining, screws, and nuts.
C Bolt with wearing-plate with nut.
D Lining for head, in segments.
E Vertical screen fastening.

A large capacity is claimed for this stamp. A six-months' test by the Home Run Mill, Prescott, Arizona, using a battery of six type "A" Nissen mortars, showed an average capacity for each stamp of 7.31 tons per 24 hours. Table 434 gives the ordinary practice and capacity of five-stamp batteries for the purpose of comparison. At Mill 165, the capacity of each Nissen stamp is from 8 to 9½ tons per 24 hours, and each stamp uses from 10 to 11⅔ gallons of water per minute.

§978. MERRALL'S INDIVIDUAL MORTAR. — The Merrall's Mill Company,[14] builds a gravity stamp with an individual mortar having quadruple discharge. The makers claim for this stamp very large capacity and economy of power. The reasons for this increase of capacity and decrease of power required are

TABLE 434. — STAMP MILL PRACTICE, COMPARISON OF FIVE-STAMP BATTERIES AND NISSEN STAMPS.

Mill No.	Weight Stamp Used. Pounds.	Number Drops a Minute.	Height of Drop. Inches.	Height Discharge. Inches.	Screen Opening. Inch.	Capacity per Stamp. Tons per 24 Hours.	Gallons Water per Stamp per Minute.	Remarks.
100	1050	95–98	5.5 to 8	4	0.0235	3.875	5	5-stamp batteries
97	950	98	7 to 7.5	6	0.030	2.8 to 3	.....	" "
98	750	90	6	3	0.0148	2.5	3½	" "
103	850	100	7	2 to 4	0.0355	4.4	.....	" "
106	900	88	10.5	11	0.022	4	7 to 8	" "
107	1550	.....	.....	.....	.....	9.02	.....	" "
109	1250	.....	.....	.....	.....	4.7	.....	" "
	1550	.....	.....	.....	.....	.....	.....	" "
110	1670	.....	.....	.....	.....	6	.....	" "
96	1050	96	8	.....	.....	.....	.....	" "
114	1050	100	6.5 to 7.5	3	0.025	4.69	.....	" "
117	1047	104	6.5	3	0.040	4.84	.....	" "
118	1065	100	7.5	3	0.025	4.25	.....	" "
165	1500	.....	.....	.....	0.0197	8 to 9.5	10 to 11½	Nissen stamps

given as follows: 1. Individual Mortars. By reason of diaphragms cast in the solid mortar box frame, each stamp has its own individual mortar. The stamps, therefore, are not interfered with in their work by others, as in the open-battery type. 2. Ore Feeder and Water Supply. Each stamp has its own ore feeder which gives it an exact and full amount of ore. Each stamp also has its own water supply. 3. Quadruple Discharge. Each stamp has screens on four sides. This increased screen surface permits the crushed ore to pass the screens quicker than in the California type of battery. This diminishes slimes and makes room for oncoming ore, thus increasing the capacity. 4. Amalgamating Capacity. In spite of the quick discharge, the manufacturers claim that a large percentage of the gold is saved by amalgamation in the mortar. The mortar is more free from "swash" than the open type, thus preventing flouring of mercury. 5. Cleaning Up. Any stamp may be hung up, permitting access to the mortar while the rest of the battery is running. 6. This mortar permits the use of heavy stamps. For hard ore the manufacturers recommend 1,200-pound stamps.

§ 979. M. P. Boss Individual Mortar. — An individual mortar[2] for an 1,800-pound stamp has been designed by M. P. Boss (see Fig. 603). He uses in the bottom a liner (1) which is fixed in position with hard lead when mercury is not used. The ring-steel liner (2) is adjustable in height, and so establishes the height of discharge. Rope calking is used about it.

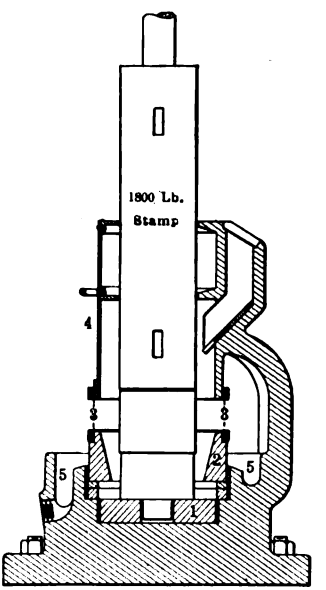

FIG. 603. — M. P. BOSS INDIVIDUAL MORTAR.

There are two screens (3), the ends of which butt together, and are held by wedge clamps making a cylinder. When the screens are removed the front of the mortar (4) is readily lifted off, exposing the entire stamp head. It will be seen that one-half of the housing is part of, and cast with, the mortar, while the other half remains with the front.

The pulp coming through the screen falls into a trough (5) cast in the mortar base, and is all united at the front of the mortar.

§ 980. RAPID ECONOMY INDIVIDUAL MORTAR. — The Rapid Economy Stamp Mill Company [18] makes an individual mortar. This mortar discharges on four sides, so diminishing the making of slimes. The mortar is built in three sections.

§ 981. THE TRAYLOR DOUBLE-DISCHARGE MORTAR [22] is shown in Fig. 604. A passage is cored through the base of the mortar to unite the front and rear discharge at the front of the mortar. While this idea has been adopted before in mill practice the Traylor form is shown here as an example. This scheme does away with all outside arrangement of launders and pumps to bring the pulp from the rear and front together for a single treatment.

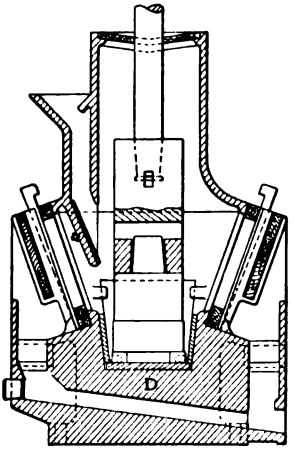

FIG. 604. — TRAYLOR DOUBLE-DISCHARGE MORTAR.

§ 982. SCHORR STAY-OVERFLOW FIVE-STAMP BATTERY MORTAR.[20] — The fundamental ideas incorporated in this design are to crush under water and to discharge the disintegrated material quickly in order to avoid dead-stamping and consequent sliming. It is a combination of Rittinger's stay battery and the Schubersatz, or overflow battery, (see Ore Dressing, Vol. I., page 214).

In the standard types of mortars there is an irregular splash against the screen surface or a part of it, and many a particle, although already of sufficient fineness, is permitted to pass back under the stamps, as it is only a matter of chance for it to pass a screen opening. In this way the stamps are doing a great deal of dead work, leading to sliming as the comminution is carried too far. By crushing under water with submerged screens (1) (see Figs. 605*a* and *b*), there is a pulsating action against their entire face with every descent

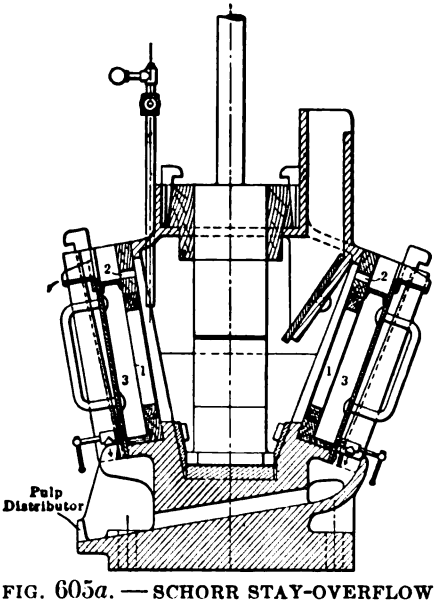

FIG. 605*a*. — SCHORR STAY-OVERFLOW MORTAR.

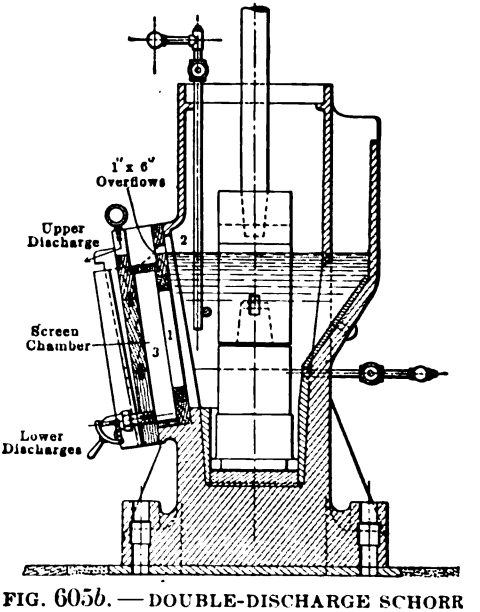

FIG. 605*b*. — DOUBLE-DISCHARGE SCHORR MORTAR.

and ascent of the stamp. Furthermore there is a thorough scouring longitudinally, due to the order of dropping. At a higher elevation apertures (2) without screens are provided. These assist materially in the discharge of the very fine sands which will rise to the surface of the water. This action is greatly furthered by the introduction of water jets under 15 to 18 pounds pressure per square inch into the mortar at the dies. The openings (2) assure the elimination of leaves and wood chips which otherwise would be apt to block the screens. The pulp is drawn off from the chamber (3) as fast as it accumulates.

Where water economy is of great importance the flow can be restricted at the expense of capacity, and a rather thick pulp may be obtained. The discharge from the screen chambers is through a stay box (3), and the overflow can be treated separately. If inside amalgamation is intended, a very large area of copper-plating can be accommodated in such a manner as to be well protected from turbulent, scouring actions.

The following advantages over the ordinary battery-mortar are claimed: (1) Less sliming, (2) larger capacity, (3) no blocking of screens by leaves or chips, (4) longer life of screens, (5) far larger copper surface in a well-protected location, (6) water economy.

The design has been executed with the view to fitting any standard mill. By lifting the front plate and by arranging chuck blocks in the usual manner, ordinary milling conditions are established. In this way an accurate test is possible, and every element of chance or risk is avoided.

The weight and the cost of this mortar for a certain weight of stamps are about the same as of the standard designs on the market.

§ 983. Boss Standard Battery. — The standard form of Boss battery-mortar is shown in Fig. 606.[2] Replaceable liners are provided for taking wear on the sides, and on the base a liner, into which the die fits, is used. The screen is held in place by an eccentric button, doing away with the wedges. The inlet for the ore is placed higher up than in the Homestake mortar, thus narrowing the mortar, and increasing the capacity.

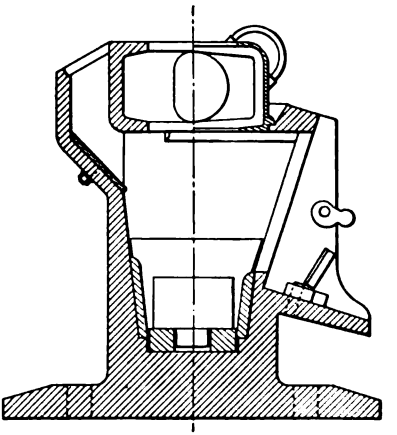

FIG. 606. — BOSS STANDARD MORTAR.

§ 984. Standard Ten-Stamp Battery.[16] — Fig. 607*a* shows a modern ten-stamp battery of the Homestake type. Fig. 607*b* shows the mortar with its dimensions. Comparing this cut with that of the Homestake mortar, Fig. 111*c* Ore Dressing, Vol. I., it will be seen that the former is made much heavier and is supplied with removable liners to take the wear.

§ 985. Traylor Sectional Mortars.[22] — Sectional mortars are built for mule-back transportation, the heaviest pieces never weighing over 300 pounds. The method of dividing the mortar base into vertical sections has made it possible to build a mortar with its base extending above the splash line, thus avoiding the possibility of leaky joints where the base and top join. The tops are built of hard wood bolted together and attached to the base without rivets. The base is constructed of cast iron, planed and held together by bolts. Liners are used under the dies. This style of mortar has proved very satisfactory. Fig. 608 shows a mortar of this type.

§ 986. Guide Blocks. — Many devices for guiding the stamp stems have

been introduced and used with more or less success. See Ore Dressing, Vol. I., page 155. The purpose of a guide block is to secure true alignment combined with a minimum of friction. It is obvious that if a stamp stem is out of vertical in any direction, great friction is set up, causing the stamp to hang in the guides and thus preventing rotation which is essential to regular wear of the dies, shoes, cams, and tappets. This decreases the effectiveness of the blow and decreases the capacity, but notwithstanding the great number of appliances, both in wood and metal, which have been devised to meet the

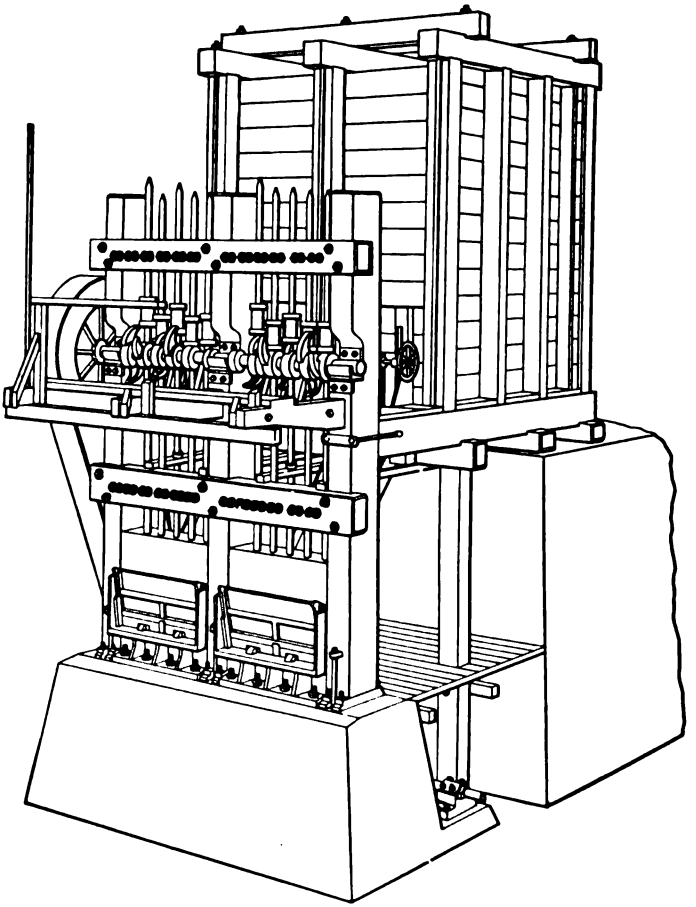

FIG. 607*a*. — MODERN TEN-STAMP BATTERY.

special requirements of a stamp guide, the majority of mill men favor the old-fashioned guide blocks. Denny [5] (South African practice), prefers English beech as it has good life without undue wear on the stems. Hard woods make excellent guides, but cause rapid wear of the stems, and consequently give rise to unfavorable conditions for the lift, and so excessive vibration.

To overcome objections to one-piece stamp guides, sectional guides have been devised. Many forms have been designed but few of them have proved successful in practice, chiefly owing to the number of loose parts of which they are composed, and the difficulty of keeping them properly adjusted.

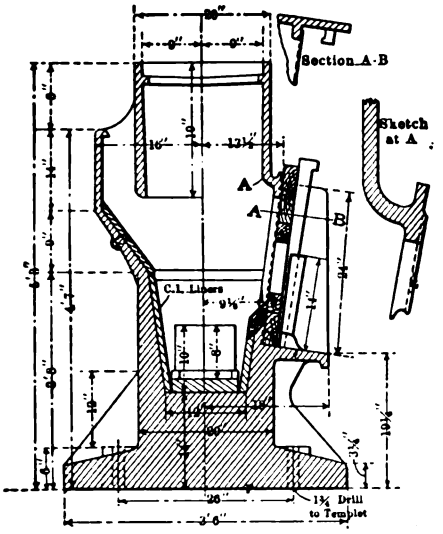

FIG. 607*b*. — MODERN HOMESTAKE-TYPE MORTAR.

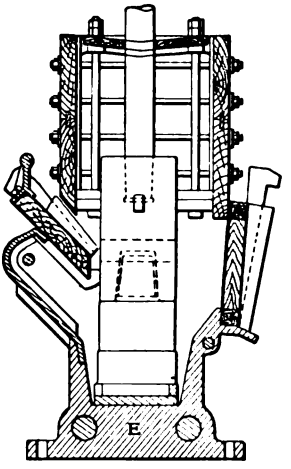

FIG. 608. — TRAYLOR SECTIONAL MORTAR.

Denny[5] describes a sectional stamp-guide, Figs. 609*a*, *b*, *c*, and *d*, which he claims has proved successful in practice on the Witwatersrand. Each stem *a* moves in a separate pair of hard-wood guide blocks *b*, adjusted by two hard-

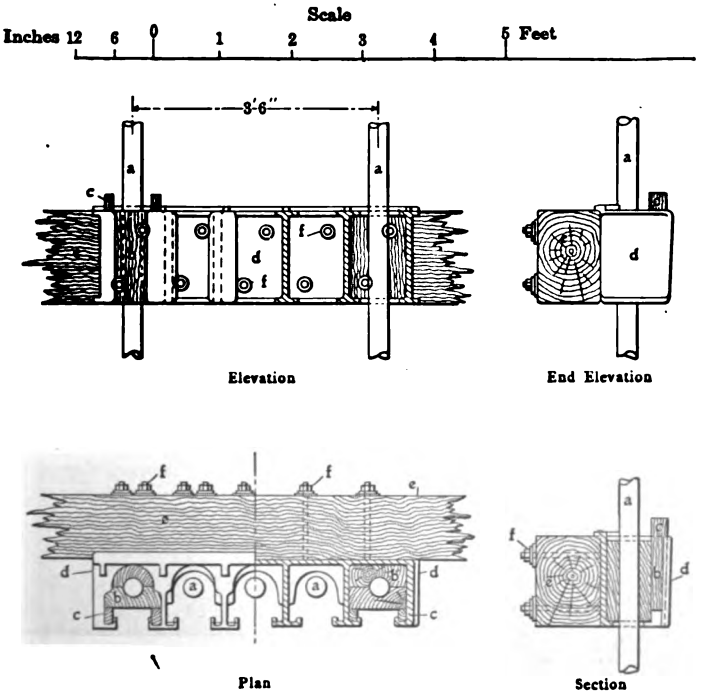

FIGS. 609*a*, *b*, *c* and *d*. — DENNY SECTIONAL GUIDE BLOCKS.

wood wedges *c* which are fitted into suitable lugs in the cast-iron or steel guide frame *d* which is attached to the usual guide stringer *e* by bolts *f*.

The advantages of this form of guide are: (1) Any stamp can be "hung up" for repair or adjustment of its guides without interfering with the others. (2) As each pair of guide blocks can be wedged tight, lost motion is reduced to a minimum. (3) The vibration of the mill only tends to tighten the adjusting wedges. (4) The guide blocks can be made with the grain of the wood parallel to the stem, therefore presenting a smoother and more lasting surface than in the ordinary form.

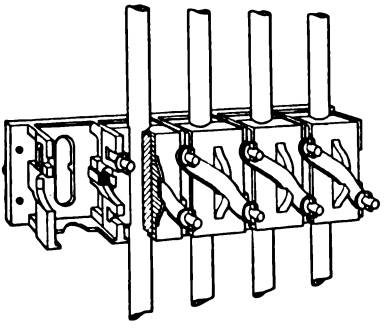

FIG. 610. — WELLMAN-SEAVER-MORGAN SECTIONAL STAMP-GUIDES.

Wellman, Seaver, Morgan Company [23] builds a sectional stamp-guide shown in Fig. 610. In this guide a hole is bored parallel to the grain in a block of hard wood. This block is then split parallel to the hole. One part of this block is placed in the main casting and the other portion in the box, the joint being placed parallel to the cam shaft. These blocks are held together by springs. Between the two halves of each guide block are placed shims of soft wood which are planed off as the guides wear and need adjusting.

This guide, being split parallel to the cam shaft, is better adapted to taking up side wear (which is greater than end wear), than guides split perpendicular to the cam shaft. The design is simple, possessing very few parts, and any stamp stem or guide may be taken out without disturbing the others. Existing stamp batteries may readily be equipped with them.

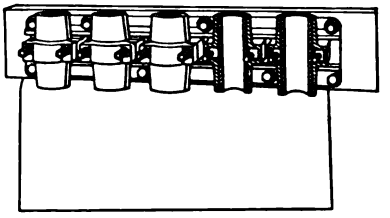

FIG. 611. — FRIED. KRUPP GUIDE BLOCKS.

Besides the usual wooden guides the *Fried. Krupp Grusonwerk* [13] supplies iron guides as shown in Fig. 611, each of which may be taken to pieces without disturbing any of the others. Five of such guides are fitted to one common cast-iron plate between two strips, and are secured by two screw bolts to the plate and the guide timber, while the plate is secured to the guide timber by eight special screw bolts.

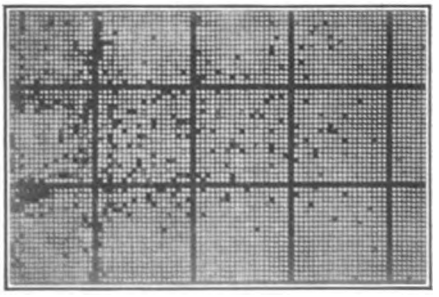

FIG. 612. — FOOTE BATTERY SCREEN.

§ 987. SCREEN OPENINGS. — The question of screen openings has been so thoroughly discussed in Vol. I., §§ 144 to 157, that it seems unnecessary to say much with regard to screens at this point. The author wishes, however, to call attention at this point to a form of battery screen in use at Grass Valley, California, which is said to be highly successful.

§ 988. BATTERY SCREENS. FOOTE SCREEN. — In order to strengthen battery screens, A. D. Foote [12] leaves portions of the screen plate blank (see Fig. 612). He uses a round punched hole $\frac{1}{32}$ inch in diameter, $\frac{3}{64}$ inch apart on centers.

Lines $\frac{1}{16}$ inch wide, one inch apart, intersecting each other at right angles, are left blank. This arrangement has been found very efficient in strengthening the screen while reducing the screening area but slightly. Screens that have been subjected to 25 or more days' continuous use show but little wear and are not clogged seriously, whereas ordinary punched plate, when subjected to the same conditions, has been found to last only 7 or 8 days.

§989. Boss Stamp Head.—The old-style stamp stem averages 13 feet in length, while the stamp head is about 18 inches. In this style of stamp the stamp head is about 10.4% of the total length of stem and head. M. P. Boss[2] departs from custom and makes his stamp head 42 inches long. By this means the center of gravity is

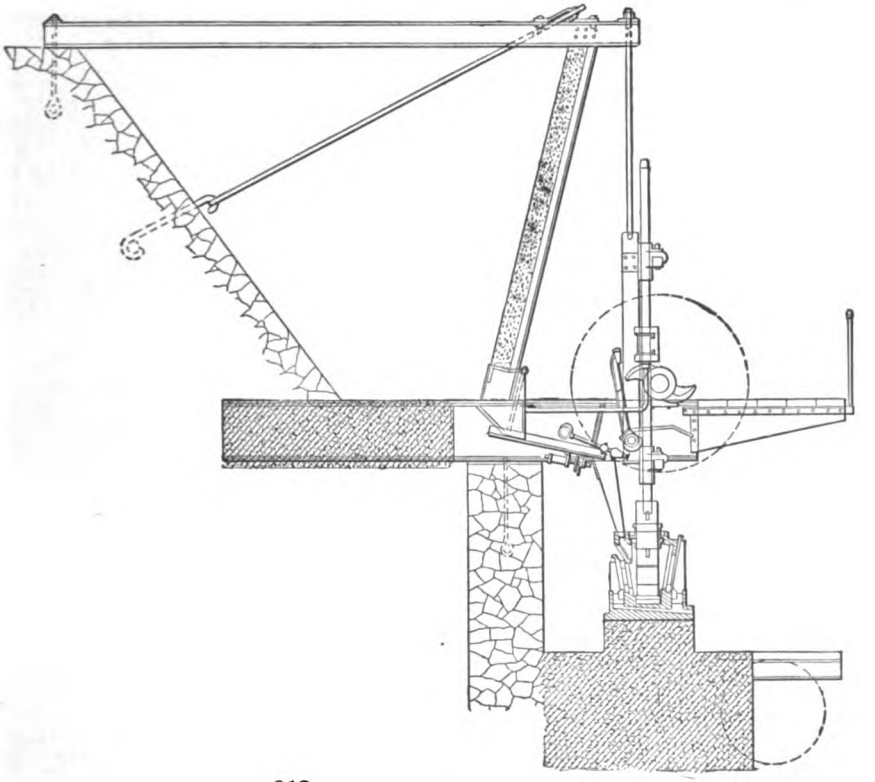

FIG. 613. — PACHUCA STAMP BATTERY.

brought down very low, where it belongs. Basing the calculation on the assumption that the length of his stem and head is 14½ feet as in old style, the head figures out as about 24% of total length of stem and head. Boss claims that owing to the presence of the long head and relatively short stem, the vibration in the latter is much decreased. The lower guide is placed so close down to the head that when new shoes and dies are on, the stamp may be raised but 9 inches.

A stamp is far more apt to strike a piece of ore on one side of the shoe than in the center. When the stem is long, the head short, and the lower guide not near the head, a decided vibration, which may be practically continuous, is set up in the stem. On the other hand, a long-headed stamp develops no serious vibration. Boss ran a 30-stamp mill of this type, with stamp head less than 42 inches long, for seven years with only four stems breaking.

This style of stamp has been introduced at several mills. Fig. 613 shows

a sectional view of the Pachuca stamp battery built for the Tonopah Mining, Milling, and Development Company.

§ 990. FRAMES. — Fig. 613 shows also a steel cantilever stamp-frame designed by M. P. Boss [2] and in use at the mill of the Tonopah Mining, Milling, and Development Company. As is seen in the cut, the battery frame is a part of the ore bin, from which it gets its rigidity. Two concrete walls, 30 inches thick, are the foundations for a series of 24-inch I-beams having 5.5 foot centers. These beams extend out so as to take the bearings for the cam shaft. The skeleton of the bin is of 10-inch I-beams, and the 10-inch cap channels are a support for a hanging strap which catches the base beams near the cam-shaft bearing, giving that bearing an extra support. This construction leaves a clear passage around the two five-stamp mortars which are of double discharge and low type.

§ 991. Boss WEDGE-GRIP TAPPET. — A transverse section of the Boss wedge-grip tappet [2] is shown in Fig. 614.

A longitudinal space *A* is cut in the tappet from the material next to the base. The length of this space measures $\frac{3}{16}$ inch less across than the diameter of the bore in the tappet. When the wedge *B*, which has a taper of about 0.05 inch in 3½ inches, is driven in, it forces the gib *C* against the stem *D* which is wedged against the tappet *E* at *S* and *S*. Two points of contact give a non-positive grip, while three points of contact give a grip which is much less apt to slip. While in the old style of tappet and gib but two bearing points were present, the Boss tappet is so arranged as to give a three-point control. The claim is made that this device works very satisfactorily.

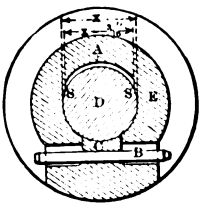

FIG. 614. — BOSS WEDGE-GRIP TAPPET.

§ 992. PROPORTIONS BETWEEN WEIGHTS OF STAMP PARTS. — Fried. Krupp Grusonwerk [13] manufactures a stamp which has found wide use. The mortars are built in definite relative proportions to the weight of the stamp. Thus, for a 500-pound stamp the weight of the mortar is 3,100 pounds, giving a ratio of 1 to 6.2; for a 900-pound stamp a 5,700-pound mortar is used, giving a ratio of 1 to 6.33; while for a 1,200-pound stamp, the weight of the mortar is 8,800 pounds or a ratio of 1 to 7.33. Table 435 gives further details with regard to the relative proportions between the weights of the stamp parts.

TABLE 435. — RELATIVE PROPORTIONS BETWEEN THE WEIGHTS OF THE STAMP PARTS AS MADE BY FRIED. KRUPP.

Total.	Shoe.		Boss.		Stamp Rod.		Tappet.	
Weight of Stamp. Pounds.	Weight. Pounds.	Weight. Percent.	Weight. Pounds.	Weight. Percent.	Weight. Pounds.	Weight. Percent.	Weight. Pounds.	Weight. Percent.
500	95	19	147	29.4	205	41.0	50	10
800	170	21.3	220	27.5	308	38.5	121	15
1000	233	23.3	275	27.5	390	39.0	121	12.1
1250	233	18.6	360	29.0	515	41.0	167	13

§ 993. CAM SHAFTS. — The Fried. Krupp Grusonwerk [13] supplies cam shafts for use with their patent self-tightening cams, one of which is shown in Fig. 615*a*. These cam shafts are made of fagoted iron, turned for patent key fastening of cams and slotted for receiving a pulley.

§ 994. CAMS. — The cams made by the Fried. Krupp Grusonwerk [13] are set by means of a patent key-fastening appliance permitting of an easy adjust-

ment. As shown in Fig. 615*b*, the shaft bulges at the places where the cams are fastened, the keyseats being formed by eccentric faces, the position of which to one another determines the order of drop permanently. The keys are concave in shape and are made of phosphor-bronze. To fasten the cams it is only necessary to place them on the shaft at any of the eccentric faces, slip in and tap the key. Once in operation the keys tighten automatically by the stroke of the stamps. A slight blow of a hammer on the back rim suffices to loosen the cam.

FIG. 615*a*. — KRUPP CAM SHAFT.

FIG. 615*b*. — CAM AND KEY.

§ 995. Boss Cam Key. — The Boss cam key [2] is shown in Fig. 616. The key *A* is made out of rolled Tobin bronze bar which requires no fitting. The cam shaft has one side planed off flat where the cam is to be placed. The diameter of the Tobin bar from which the key is cut is two-thirds that of the cam shaft. The outside of this Tobin bar is sawed off longitudinally. This slice is then used for the key. The claim is that it holds absolutely and is very easily removed.

§ 996. Canda Cams. — The Canda Cam [6] differs somewhat from the Blanton cam as described in Vol. I., page 193. The cam, shown in Fig. 617, has an eccentric groove (1) within the hub and occupying only a portion of the width of the same. The wedge key, which fits within the eccentric groove of the cam hub, is provided with a slot or recess (2) on its concave side which enables the studs or projections (3) on the cam shaft to engage it and hold it in position. The slot (4) in the cam hub allows the cam to slip over the studs on the cam

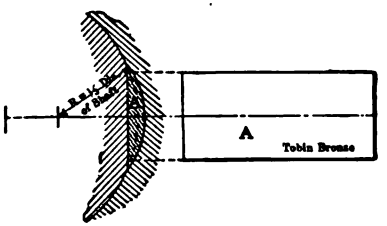

FIG. 616. — BOSS CAM KEY.

FIG. 617. — CANDA CAM.

shaft. By reason of the positions of the studs on the cam shaft, the cams are interchangeable; that is, each of the series of cams will take any one of the angular positions as determined by the position of the studs. When repairs are necessary the time required to remove cams and cut keyseats is saved. The cams are readily loosened by striking them in a direction opposite the load. The fastening is self-tightening and will not loosen under load as key-seated cams may.

The studs require only plain drilled holes in the shaft and are driven into place. There is but little shearing strain upon the studs because the cams are held in place almost entirely by compression of the wedge between the cam hub and the shaft.

§ 997. The Lever-Operated Latch Finger invented by M. P. Boss,[2] is

shown in Figs. 618*a*, *b*, and *c*. Fig. 618*a* shows the device when not in use. When it is desired to hang up a stamp, the upright bar (1) is swung under the tappet (2) as in Fig. 618*b*. When pressure is applied downward on the lever (3), the toggle joint (4) is pulled toward the tappet and raises (1). This in turn raises the tappet sufficiently so that the cam in its revolutions does not strike it. By this means each stem may be hung up.

§ 998. POWER FOR STAMPS. — Fig. 619 shows at a glance the approximate power required to run a ten-stamp battery at 90 drops a minute, for stamps weighing from 500 to 1,200 pounds and drops varying from 6 to 10 inches. This plot takes into account the friction of the moving parts.[6]

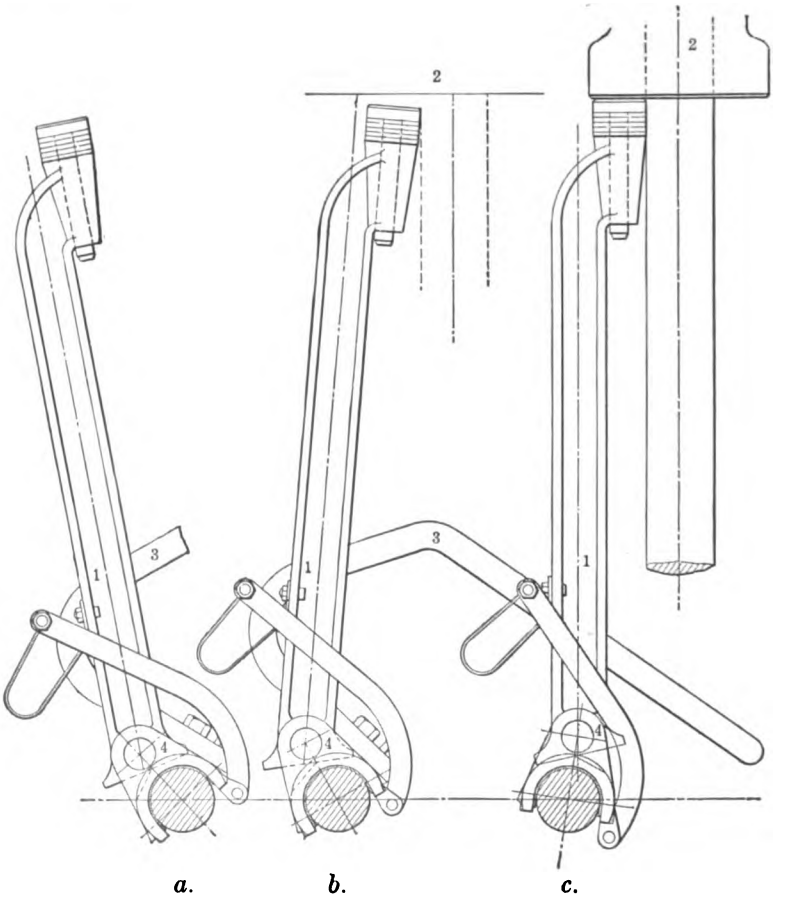

FIG. 618. — BOSS LEVER-OPERATED LATCH FINGER.

§ 999. ORDER OF DROP. — In Vol. I. of Ore Dressing, page 215, the question of order of drop has been taken up, and the principles governing order of drop as given by the various authorities have been outlined. With regard to this point, E. B. Preston [17] says that, in order to insure a good splash in the mortar, attention must be given to the succession in which the stamps are made to drop. A good splash is one that shows a wave passing along the lower edge of the screen, moving backward and forward from end to end, or a similar wave

motion that has its initial point from the center stamp. Mr. Preston further states that the orders most frequently adopted in California are 3, 5, 1, 4, 2; 1, 5, 2, 4, 3; 1, 3, 5, 2, 4; and 1, 4, 2, 5, 3.

William J. Cox,[4] manager of Mill 100, recommends strongly 1, 3, 5, 2, 4 as the best order of drop.

Figs. 620*a* and 620*b* show the usual order of drop in the case of a ten-

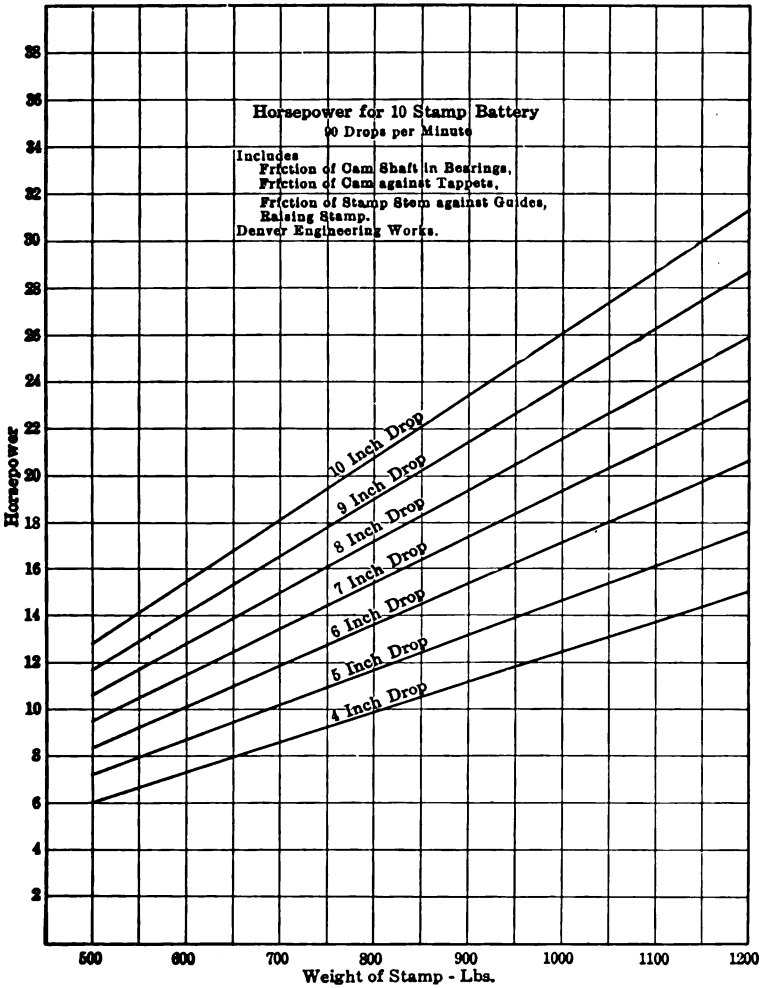

FIG. 619. — POWER DIAGRAM FOR STAMP MILLS.

stamp battery[6] and the arrangement of cams required. In Fig. 620*a* the row of figures marked "order of drop" indicates the sequence in which the stamps drop. With reference to the lower row of figures the order of drop is thus: 1, 6, 3, 8, 5, 10, 2, 7, 4, 9. It will be noted in this cut that stamps 1, 2, 3, 4, and 5 have left-hand cams while the other five are right-hand. This is done so that, as has been explained in Vol. I., page 195, the lateral thrusts upon one side of the cam shaft may be compensated by an equal and opposite thrust upon the other side of the same shaft.

A comparison between the order of drop 1, 4, 2, 5, 3 and 1, 5, 2, 4, 3 is given by C. S. Richardson.[7] The mill was of 20 heads, provided with double-discharge mortars. Each stamp complete weighed 850 pounds and the order of drop was 1, 4, 2, 5, 3 running at 100 drops a minute. With a 6-inch drop and a 7-inch discharge, the average duty for one month was 63 tons per day, and in each mortar, stamp 5, counting from counter-shaft pulley, was always choked and very frequently the whole mortar was also. Ten heads were hung up and the order changed to 1, 5, 2, 4, 3, then the others were changed and the average capacity jumped to 81 tons a day. There was no choking under number 5 or under number 1, and not once for four months did a mortar choke. For one month running at 94 drops (short of water), the average was 77 tons a day. Numbers 1 and 5 took ½ to ¾ inch more drop than 2, 3, and 4 stems.

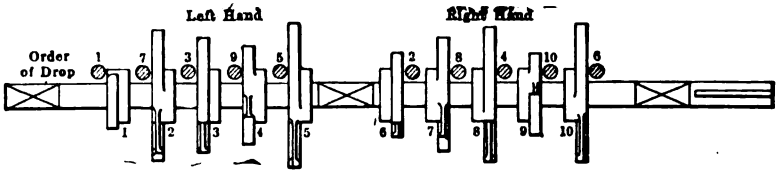

FIG. 620*a*. — CAMS AND CAM SHAFT FOR TEN-STAMP BATTERY.

With the same mill, same power, same quality of ore, in fact, with all conditions the same, and crushing 18 tons a day more, the result seems a good argument for 1, 5, 2, 4, 3 order of drop. However, it may be said that while in special cases one order of drop may have marked advantages over some other order, the facts of the case are that, bearing in mind the general principles governing order of drop, any arrangement of the stamps will serve that distributes the pulp evenly and discharges it well.

§ 1000. ECONOMIC RANGE OF STAMPS. — With regard to the economic range of stamps, Philip Argall [9] offers some valuable suggestions. Some say that it matters not whether the ore is fed in pieces up to 2-inch cube or in cubes as small as ½ inch, the capacity is the same through a given screen aperture, while others claim a larger output for a ½-inch feed. Argall holds that recent practice has placed on the stamp, work that can better be performed by rolls or breakers, an error which has been intensified by constantly increasing the weight of the stamp, in order that it might be able to break any sized piece of ore. Passing to the other extreme, he asserts that the stamp is not an efficient fine crushing machine. It is just possible that a 1,250-pound stamp might sink through a ½-inch bed and even strike the die. Thus a well-prepared ore might under these conditions show even a lower stamp efficiency than if batteries were fed with a maximum cube of 2 inches. In this case there would be material on the die to resist the weight of the falling stamp and the greater part of the energy would be utilized in the work of crushing. If, however, ½-inch cubes were fed to an 800-pound stamp, the output would be fully as great as that of the 1,250-pound stamp similarly fed; here, then, there is something wrong. The trouble with stamps, aside from their being reciprocating machines in which a dead weight of 1,000–1,350 pounds has to be picked up from a state of rest by a rapidly moving cam 100 times a minute, is that modern practice attempts to do too much with them; crushing ore from 2 to 0.02 inches is a reduction of 100 to 1 against, say 4 to 1, with other classes of crushing machines. Lifting a 1,250-pound

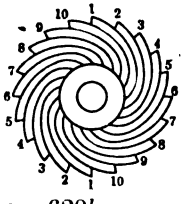

FIG. 620*b*. — END VIEW.

stamp to crush a 2-inch cube of hard rock may be defended, but why should the same stamp be used to crush 0.08 to 0.04-inch particles? If stamps have a field at all, it lies between the limits of ½ inch to $\frac{1}{10}$ inch. Mr. Argall maintains, however, that as far as crushing efficiency is concerned, even if stamps are used in series to secure the benefit of successive comminution, rolls are far more efficient.

§ 1001. LIFE OF SHOES AND DIES. — In South Africa [13] the average wear on shoes and dies is 340 grains a ton of ore crushed which gives the stamps a life of 90 to 105 days. In this case hard gold ore is fed in pieces 1 to 1.5 inches diameter and is worked up with 1,250-pound stamps. The drop is 8.5 inches and there are 95 drops a minute. The capacity, using a No. 25 screen, is 5.5 to 6 tons per stamp per 24 hours.

In Mexico the wear is 400 to 500 grains per ton, or the life of the shoes and dies is only 73 to 82 days. Here hard silver ore is worked up with 900-pound stamps. The stroke is about 8 inches and the number of drops a minute is 90. The output with a No. 40 screen is 2 to 3 tons a stamp per 24 hours.

The Desert Power and Mill Company [15] reports that the chrome-steel shoes and dies used by them are worn down to a thickness of 2 inches. Chrome-steel dies average 1,736 stamp hours crushing 315 tons of ore. The life of chrome-steel shoes is 1,011 stamp hours crushing 285 tons of ore. The steel consumption of shoes and dies is 6.70 and 7.60 ounces per ton of ore crushed respectively.

§ 1002. MATERIALS FOR WEARING PARTS. — The principal wearing parts of stamp mills are the shoes and dies.[1] These parts are invariably made of forged steel. There are many manufacturers of forged steel. The Chrome Steel Works now manufacture their shoes and dies by a hydraulic forging process. The life of these various forged-steel shoes and dies is apparently about the same, the difference under the same conditions being so small as to be practically negligible. The chilled-iron shoes of special mixture, combining toughness of the shoe body and a soft gray iron neck, and the chilled-iron die, give very excellent results and in many cases the life of these shoes and dies has been found to be about two-thirds that of forged-steel shoes and dies. However, they are rarely used now except in connection with some large mines where a foundry is available to recast the part not used up when taken out.

The tappets and cams are generally made of open-hearth steel castings, and in many cases the boss heads are made of the same material, although often they are made of cast iron. Chrome steel castings are much preferred by many for these parts. It is claimed that the wearing life of chrome-steel castings is slightly greater than that of the commercial open-hearth steel castings, but the exact comparison of the wearing qualities of both is not available. From Table 107, Vol. I., however, it would seem that it might be true to a certain extent.

The Taylor Iron and Steel Company [21] states that in the case of shoes and dies it has encountered difficulty in toughening large masses of manganese steel without causing the metal to crack. They state that their experience has shown that it is extremely difficult to get a satisfactory casting in manganese steel where the thickness exceeds about four inches. Cams, tappets, and bosses can readily be made in manganese steel, but the machining required makes the pieces so very expensive, without increasing the life, that it is not recommended for this purpose.

BIBLIOGRAPHY OF GRAVITY STAMPS.

1. Allis-Chalmers, Milwaukee, Wisconsin. Private communication with reference to steel for wearing parts of stamp batteries.
2. Boss, M. P., San Francisco, California. Private communication.
3. Caetani, G., San Francisco, California. Private communication.
4. Cox, William J., Manager Camp Bird, Limited, Ouray, Colorado. Private communication.
5. Denny, George A. Pamphlet entitled Design and Working of Gold Milling Equipment.
6. Denver Engineering Works Company, Denver, Colorado. Bulletin 1026.
7. Eng. & Min. Jour., Vol. LXXVI., (1903), p. 228. C. S. Richardson. Discussion of order of drop of gravity stamps.
8. *Ibid.*, Vol. LXXVII., (1904), p. 404. Ira C. Boss. Description cantilever battery frame.
9. *Ibid.*, Vol. LXXIX., (1905), p. 889. Phillip Argall. Modern Crushing and Grinding Machinery.
10. *Ibid.*, Vol. LXXXII., (1906), p. 434. Nissen Stamps at Boston Consolidated.
11. Fairbanks Morse and Company, Denver, Colorado. Catalogue and blue-prints of Nissen Stamp.
12. Foote, A. D., Grass Valley, California. Private communication, also sample of screen in use over 25 days and illustrated in Fig. 612.
13. Fried. Krupp Grusonwerk, Magdeburg-Buckau, Germany. Private communication and photograph.
14. Merrall Mill Company, San Francisco, California. Catalogue.
15. Parsons, A. R., DeLamar, Nevada. Private communication.
16. Power and Mining Machinery Company, Cudahy, Wisconsin. Private communication concerning stamps.
17. Preston, E. B. Bulletin C. California State Mining Bureau. "California Gold Mill Practices," p. 36.
18. Rapid Economy Stamp Mill Company, San Francisco, California. Catalogue.
19. Renshaw, William E., Manager Gem Consolidated Mines Company, Idaho Springs, Colorado. Private communication.
20. Schorr, Robert, Engineer, San Francisco, California. Description and blue-print of Schorr battery.
21. Taylor Iron and Steel Company, High Bridge, New Jersey. Private communication with reference to steel for wearing parts of stamp batteries.
22. Traylor Engineering Company, New York City, N. Y. Catalogue.
23. Wellman, Seaver, Morgan Company, Cleveland, Ohio. Catalogue.

CHAPTER XXVII.

PULVERIZERS OTHER THAN GRAVITY STAMPS.

§ 1003. — In the present chapter are treated certain machines which have come into more or less prominence since the year 1903. These machines are arranged as nearly as possible in accordance with the method followed in Vol. I., the Roman numerals corresponding in each case to the Roman numerals there used in the classification.

§ 1004. PURPOSE. — As has been stated in Ore Dressing, Vol. I., page 231, these machines are used: (1), to replace gravity stamps for crushing gold ores or for re-crushing middlings from jigs or other concentrators and (2), for grinding soft materials such as phosphate rock, gypsum, cement, talc, etc. The introduction of the tube mill with its far-reaching effect upon gold-milling practice makes it necessary to add a third use, namely (3), the further comminution of material already reduced to a comparative degree of fineness by gravity stamps.

§ 1005. CLASSIFICATION. — The machines have been arranged in classes or groups according to their mode of action (see Table 436). The remarks upon page 231 of Vol. I., made with regard to this classification, apply here.

TABLE 436. — CLASSIFICATION OF PULVERIZERS. MACHINES MARKED WITH AN ASTERISK, THUS,* ARE DESCRIBED LATER IN THE TEXT.

Abbreviations. — Cont. = Continuous; In. = Inch; Int. = Intermittent; S = Small Size Machine; L = Large Size Machine.

Machine.	Principle.	Material of Crushing Surface.	Run.	Continuous or Intermittent.	Capacity per 24 Hours. Tons.	Horse-power Used.	Uses Designed for.
			Class I.				
Grinding Pan.*	Horizontal surfaces grinding concentrically.	Iron.	Thick pulp. Sometimes thin pulp.	Cont.	8–30	4–9	Re-grinding of battery sands.
			Class III.				
Braun Sample Grinder.*	Vertical concentric grinding surfaces, horizontal shaft.	Stationary disc, a tough casting; revolving disc, soft iron.	Usually dry.	Cont.	.....	1	Fine grinding of ore from ¼ inch to from 20–200 mesh.
Sturtevant Sample Grinder.*	Same as above.		Usually dry.	Cont.	.....	3	Same as preceding.
Nevada Sample Grinder.*	Same as above.		Usually dry.	Cont.	.....	3½	Fine crushing of ore from pea size to 80 mesh.
Stanwood Gravity Muller or Kings Bucking Board.*	Bucking board with power driven muller.	Iron.	Dry.	Int.	.....	½	Fine pulverizing for assay.
McKenna Laboratory Ore Grinder.*	Agate mortar with agate pestle reproduces motion of hand grinding.	Agate.	Dry.	Int.	.....	.....	Grinding ore samples to an impalpable powder.

TABLE 436. — (*Continued*).

Class VIII.

Alsing Tube Mill.*	Cylinder, revolving on horizontal axis, containing flint balls acting by gravity.	Wood, steel, silex, chilled iron, manganese steel, porcelain, etc.	Wet or dry.	Cont.	S 24 tons from 8–125 mesh, L 150 tons from 8–125 mesh.	50 plus.	Fine grinding of cement-clinker, gold ores for cyaniding, etc.
Abbé Tube Mill.*	As preceding.	As preceding.	Wet or dry.	Cont.	L 125 tons wet grinding 10–100 mesh.	55–62	Fine grinding of cement-clinker, gold ores for cyaniding, etc.
Denver Engineering Co. Tube Mill.*	As preceding.	As preceding.	Wet or dry.	Cont.	L 125 tons wet grinding 10–100 mesh.	90–100	Fine grinding of cement-clinker, gold ores for cyaniding, etc.
Gates Tube Mill.*	As preceding.	As preceding.	Wet or dry.	Cont.	L 14–20 barrels of cement per hour.	70–75 125 for starting.	Fine grinding of cement-clinker, gold ores for cyaniding, etc.
Davidsen Tube Mill.*	As preceding.	As preceding.	Wet or dry.	Cont.	L 175 tons 95% through 100 mesh.	80	Fine grinding of cement-clinker, gold ores for cyaniding, etc.
Hardinge Tube Mill.*	Two cones base to base revolving on horizontal axis as a shaft, otherwise same as other tube mills.	As preceding.	Wet or dry.	Cont.	Average capacity 6 by 6-foot machine 50 tons.	14–16	Used for all kinds of tube milling.
Ferraris Ball Mill.*	Cylinder, revolving on horizontal axis, containing steel balls acting by gravity.	Rough manganese-steel plates.	Usually wet.	Cont.	50–100 tons.	S 6. L 10.	Used chiefly in crushing previous to concentration.
Gates Ball Mill.* Similar ball mills made by Fried. Krupp and also Humboldt Engineering Works.*	As above.	Steel plates.	Wet or dry.	Cont.	S 12–16 barrels cement per hour. L 18–24 barrels cement per hour.	S 30–40. L 40–50.	Dry crushing of cement, wet or dry crushing of ores for concentrating, etc.

Class IX.

Kent Mill.*	Revolving die ring provided with three rollers held against it by springs.	Die ring and rolls of steel, renewable at moderate cost.	Dry.	Cont.	**48–200 tons depending on material. Fed with 2-inch and finer material.**	**35**	**Dry crushing of cement, trap rock, ores, etc.**
Wild Mill.*	Revolving die ring with two loose mullers or rollers crushing by their weight.	Die ring of rolled steel and renewable; muller and shoes of steel and renewable.	Wet.	Cont.	**S 18–30. L 50–75.**	**S 3. L 8.**	**Crushing for concentration.**

Class XV.

Garfield Chili Mill.*	Cylindrical rollers revolving on horizontal axis and gyrating in a pan.	Iron.	In water.	Cont.	100 tons from ¼ inch to 30 or 40 mesh.	6–8	Usually for fine grinding ¼ inch to 40 mesh.
Akron Chili Mill.*	Same as preceding.	Iron.	In water.	Cont.	25–50	6–8	For fine grinding ½-inch to 40 mesh.
Lane Slow Speed Mill.*	Same as preceding.	Iron.	In water.	Cont.	50–60	8–12	Fine grinding for amalgamation, etc.
Elspass Mill.	Cylindrical rollers on fixed horizontal shaft pressed down upon revolving pan by means of springs.	Die ring and roller shells of steel.	In water.	Cont.	35–75	10–12	Same as preceding.

TABLE 436. — (*Continued*).

Class XVII.

Little Giant Mill.*	Mortar containing muller rocked backward and forward.	Iron.	With water.	Cont.	5–10	3	Crushing gold ores for amalgamation.
Hathaway Gyratory Mill.*	Mortar with muller keyed to gyrating shaft.	Iron.	In water.	Cont.	12–20 60–100	2 2	Crushing ½ inch to 100 mesh. Crushing ½ inch to 12 mesh. Crushing gold ores, re-grinding. Crushing for concentration or cyanide.

Class XVIII.

Improved Huntington Mill, Power and Mining Machinery Company.*	Die ring with vertical axis inside of which are rollers which revolve around central shaft and rotate on vertical axis by friction and crush by centrifugal force.	Iron.	In water.	Cont.	5 ft. 20–35 tons. 6 ft. 40–75 tons.	8–12	Crushing for concentration, also recrushing middlings and tailings, crushing for amalgamation.
Huntington. Harron, Ricard, and McCone.*	Same as preceding.	Iron.	In water.	Cont.	5 ft. 20–35 tons. 6 ft. 40–75 tons.	6–8	Crushing for concentration, also recrushing middlings and tailings, crushing for amalgamation.
Huntington. M. P. Boss.*	Same as preceding, but no screens. Overflow launder used.	Iron.	In water.	Cont.	Not given.	Not given.	Crushing for concentration, also recrushing middlings and tailings, crushing for amalgamation.
Huntington Mill. Sherman.*	Rollers held out by springs as well as action of centrifugal force.	Iron.	In water.	Cont.	Not given.	Not given.	Crushing for concentration, also recrushing middlings and tailings, crushing for amalgamation.

Class XXI.

Stroud Mill.*	Impact machine with one horizontal shaft in which are keyed four to eight beater arms. Beater arms revolve in a chamber or casing, the sides of which are provided with chisel edges oppositely inclined to movement of the beaters.	Steel.	Dry or wet.	Cont.	Dependent entirely on material. No general figure can be given.	S 2–8. L 40–50.	Pulverizing or shredding asbestos, phosphate rock, etc.
Williams Hinged Hammer Pulverizer.*	Four sets of hinged hammers or beater arms revolving at high speed on horizontal shaft in closed chamber.	Steel.	Dry.	Cont.	240 tons. 1 inch to 20 mesh.	40	Cement grinding.
Jeffrey Swing Hammer.*	Same as preceding.	Steel.	Dry.	Cont.	S 6. L 2400 to ¼ inch on bituminous coal.	S 6. L 100.	Crushing bricks, bones, culm, bituminous coal, etc.

Continuous Grinding Pans.

§ 1006. — Modified forms of the Wheeler pan are in use among the gold and silver mills for fine grinding. A considerable difference of opinion has existed and in fact still exists as to whether the Wheeler pan or the tube mill is the more economical grinder. Experiments carried out at the Ivanhoe Gold Corporation, Western Australia,[30] show a slight advantage as to cost of grinding in favor of grinding pans. The author finds ardent defenders of both machines. It is conceded that grinding pans possess the advantage that they may be used as amalgamating machines. At the Lake View Consols we find Wheeler pans preceding tube mills, thus seemingly admitting that the pans, while possessing superior qualities as amalgamators, are not as good fine grinders as the pebble mill. Argall (see § 1020), recommends grinding and amalgamating pans for crushing from a size of about 0.06 inch down to 0.02 inch.[31] To the author it seems that under average conditions the tube mill is perhaps better fitted to receive pulp through 0.02 inch or thereabouts, reducing it to a very fine state of division, than is the grinding pan; whereas the range of the grinding pan for the most economic working may be, as Argall claims, somewhere between 0.06 and 0.02 inch. If we consider the conditions under which crushing takes place, we shall see a reason for this. Let us suppose that the grinding pan is being fed with grains having a maximum diameter of 0.06 inch ($\frac{1}{16}$ inch). Now as this material becomes gradually comminuted a constantly increasing amount of power is consumed in the grinding of shoes against dies. In the wet-grinding tube mill, on the other hand, grinding takes place largely between the pebbles, the material being in the form of a thick pulp so that, no matter how fine the pulp may be, almost no power is expended in useless wear. Hence the economic range of grinding pans is from a size of, let us say, 0.06 inch down to the point where the excessive grinding of iron against iron renders it more economical to resort to tube mills. The author does not go so far as to set this lower limit at 0.02 inch, but would call attention to the above as a factor which, theoretically at least, bears on the question. By using grinding pans as a preliminary operation to tube-mill grinding, not only are the advantages of amalgamation realized, but also the tube mill is relieved of that portion of the work of grinding which it is least fitted to do.

That the grinding pan is capable of reducing 0.06-inch material to an extremely fine state of division with a fair degree of economy cannot be denied. Where there are difficult transportation problems to contend with, grinding pans furnish a means of at least closely approaching the economy of tube mills.

§ 1007. Colorado Iron Works Grinding Pan. — Figs. 621*a* and *b* show a grinding pan as constructed by the Colorado Iron Works Company.[14] This pan is 5 feet in diameter, with shoes and dies of form similar to those of the Wheeler amalgamating pan, but in all its features designed and constructed with special reference to the requirements of re-grinding in cyanide work.

The pulp for re-grinding is led into an annular feed box surrounding and attached to the upper part of the driver, and passes downward through four pipes to the inner edges of the mullers. In the upper edge of the curb an annular space will be seen, which is intended to receive a continuous strip in order to secure the desired height of curb. Wood or lead is used for this, as the overflow can then be made level independently of the bottom of the pan.

The discharge is over the edge of the curb into the launder surrounding the pan, and the height of the curb, together with the amount of water supplied, regulates the fineness of product, more water being used for a given size with a high curb than with a low one. Three equidistant plows held in sockets

attached to the inner surface of the curb serve to agitate the pulp and direct it toward the center. The dovetail sockets on the outer edge of the feed box are for compensating weights not shown in place in the illustration.

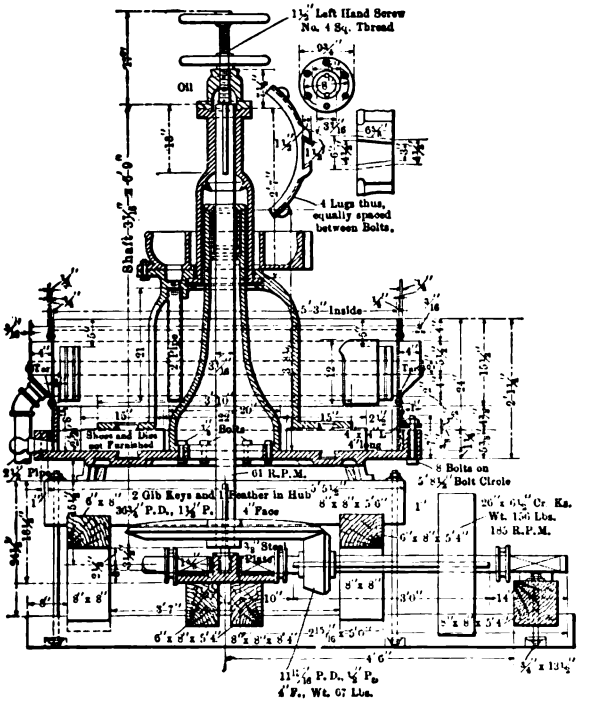

FIG. 621*a*. — CROSS-SECTION OF CONTINUOUS GRINDING PAN.

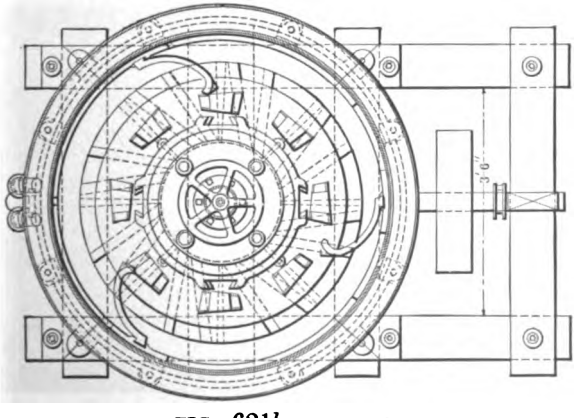

FIG. 621*b*. — PLAN.

The weight of these pans without the timber framing is 7,500 pounds each.

§ 1008. DETAILS FROM AUSTRALIAN PRACTICE. — Table 437 gives details concerning the use of grinding pans in the gold mills of Western Australia.[3]

TABLE 437. — GRINDING PANS IN GOLD MILLING PLANTS OF WESTERN AUSTRALIA.

Location.	Size of Pan.	Tons Capacity 24 Hours.	Horse-power.	Revolutions per Minute.	Remarks.
Ivanhoe Mill	5 foot	20	6½	57	With amalgamation.
Associated Northern Gold Mine	5 "	8	4.8	47	" "
Sons of Gwalia Gold Mine	5 "	33	5½	45	" "
Great Boulder Perseverance	8 "	12.6	9	31	" "
	8 "	8.4	6	27	" "
Great Boulder Proprietary	5 "	15	4.5	62	" "
Associated Gold Mine	5 "	16.5	5.2	47	Grinding only.
Lake View Consols Gold Mine	5 "	30	7	45	" "
Great Fingall Gold Mine	5 "	33	5	45	" "

As to the wear of shoes and dies, it may be said that when grinding raw ore the life of a set of shoes and dies is about 2 months. When grinding roasted ores the life of shoes and dies varies from 3 to 6 months. At the Great Boulder Perseverance the abrasion amounts to 13.23 ounces per ton of sands ground.

If we take the grinding pans in use at the Ivanhoe mill as representative of average practice the results produced in grinding are as given in Table 438.

TABLE 438. — SIZING TESTS ON FEED PULP AND GROUND PRODUCT OF GRINDING PANS AT IVANHOE MILL.

Size Mesh.		Feed Pulp.	Discharge Pulp.
Through.	On.	Percent.	Percent.
.....	40	31.4	0.6
40	60	21.8	6.2
60	100	17.6	28.7
100	150	6.1	8.0
150	.....	23.1	56.5

Sample Grinders.

§ 1009. The Braun Sample Grinder. — The F. W. Braun Company[9] is supplying two types of disc grinders for pulverizing assay samples. Both may be adjusted to any degree of fineness between 20 and 200 mesh. The hand-driven machine has the discs in a horizontal plane, with a vertical shaft, and is provided with roller bearings. The power machine has the discs in a vertical plane; the stationary disc being a tough casting, while the revolving disc is of soft iron.[10] It is enameled on the inside, and is supplied with tight and loose pulleys. In both grinders the discs are placed with their centers in line, and are replaceable. The machine is so arranged as to open for handy cleaning.

§ 1010. Sturtevant Sample Grinder. — The Sturtevant Mill Company[53] manufactures a disc grinder with provision to avoid grooving in the plates. One disc is stationary; the other is ground against it, by a horizontal shaft. The stationary disc is so constructed that it can be moved out of center from time to time, so that if a groove forms, the wear of the parts will remove the imperfection instead of aggravating it. The machine requires about 3 horse-power for its operation. The discs are vertical and replaceable.

§ 1011. The Nevada Sample Grinder. — The Nevada sample grinder, made by the Nevada Engineering Works,[48] is designed to pulverize samples of pea size to 80 mesh at one grinding. It has two discs, one of which is stationary, while the other is ground against it by a horizontal shaft. The machine requires about 3½ horse-power for its operation. The discs are replaceable;

and the pressure between the discs is regulated by a temper screw. An ordinary 3-ounce sample can be put through this machine in about one minute.

§ 1012. THE STANWOOD GRAVITY MULLER. — The Stanwood Gravity Muller, sometimes known as King's Bucking Board, is manufactured by the Hassell Iron Works.[28] It is essentially a bucking board, the muller of which is power-driven. As shown in Fig. 622, the muller *M* is drawn over the pan *P* by the connecting-rod *R* driven by the disc *D*. The handle *H* serves to lift the muller from the pan for the purpose of cleaning up the machine. The muller weighs 125 pounds. The bucking pan is 11 × 36 inches. The floor space required is 6 feet 6 inches by 2 feet. Tight and loose pulleys are provided, and one-half horse-power is required to drive the disc at 60 revolutions per minute.

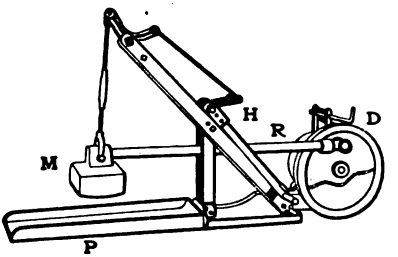

FIG. 622. — THE STANWOOD GRAVITY MULLER.

§ 1013. MCKENNA LABORATORY ORE GRINDER. — This ore grinder (see Fig. 623) is manufactured by the McKenna Brass Company, Limited.[33] It is intended for the use of iron and steel laboratories for reducing ore to an impalpable powder. This grinder reproduces almost the same motion as one makes in hand grinding, but grinds much more rapidly. The springs on the top of the sliding rod, to which is attached the agate pestle, can be adjusted to give any desired pressure, or can be thrown back altogether so as to allow of the pestle being raised to permit the mortar being removed. The latter is accomplished by loosening a set screw and dropping one of the four posts which hold the mortar stationary. The pestle should make about 200 revolutions per minute, the mortar moving very slowly in the same direction. The scraper keeps the ore in the center of the mortar, and the combined rolling and sliding motion controlled by the ball and socket supporting side arm reduces the hardest ore very rapidly.

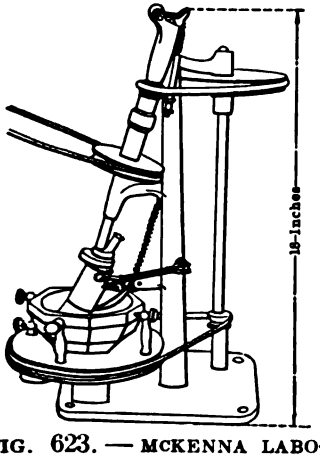

FIG. 623. — MCKENNA LABORATORY ORE GRINDER.

TUBE AND BALL MILLS.

§ 1014. — In many of the improved metallurgical processes of to-day, the first important step is the reduction of the ore to as nearly an impalpable powder as possible. Until within a few years this has proved a difficult problem to solve, for, while there are many machines that will pulverize ore down to 40 to 80 mesh, none of these machines will pulverize to 125 to 150 mesh, and the reduction of some materials to this extreme degree of fineness is an absolute requirement to the successful after-treatment of the ore. The tube mill, a machine devised some years ago, but whose merits have only recently been realized, has solved this problem of fine grinding to a considerable extent.

A discussion of tube mills and their work seems, therefore, not out of place at this point, before taking up some of the most important of these machines.

Pebble or tube mills may be classified into two general types:[56] (1) central

end-discharge mills as made by the Krupp Company, and (2) peripheral end-discharge mills as designed by Davidsen of Copenhagen, Denmark.

The tube mill, whether of the Krupp or Davidsen type, consists of a long steel cylinder with heavy cast-iron ends, supported on hollow axial trunnions on which it revolves. The cylinder itself is provided with a suitable lining and is charged with a quantity of flint or silex pebbles. Material to be ground is charged through one of the hollow trunnions, mixed with the pebbles, and, by the rubbing and pounding it receives, is reduced to a fine state of division. The ground pulp is discharged at the opposite end from where the feed enters, either through the hollow trunnion in the Krupp type or through openings in the periphery in the Davidsen type. A complete discussion of the theory of tube-mill action will be found in Chapter XXVIII. of this volume.

1015. FOUNDATIONS FOR TUBE MILLS.[45] — At Mill 118 a great deal of trouble was experienced with the foundation of one tube mill, due to improper setting of the cement. It seemed best to make the foundation 10% heavier than called for by the plans, using plenty of cement and allowing plenty of time for setting before starting the mill. In setting up a tube mill there should be a good cement floor underneath sloping to a gutter leading to the cone, spitzkasten, pump, or wheel, constituting the return circuit, so that washings from the floor may be returned for re-grinding.

§ 1016. LINERS. — The question of tube-mill linings is one of great importance. Among the materials now in use may be mentioned wood on end, silex, quartzite, steel, manganese steel, and chilled cast iron.[45] Wood on end has been used successfully for dry crushing of comparatively soft materials, but is quickly destroyed when wet crushing is attempted. Manganese steel has been found to last 15 months,[56] and silex linings have lasted as long as 3 years, crushing 50,000 tons of ore and still being in good condition. Steel liners 1¼ inches thick wear to ¼ inch before breaking. The Krupp liners formerly in use at Mill 118 [45] were 1½ inches thick, of chilled cast iron. The chill was only ¼ inch deep and when worn off the liner wore down very rapidly. The average life of these liners was 40 days in the case of one of the mills, which was at the time running 32 revolutions per minute, and grinding 125 tons per day of very hard quartz sand.

W. R. Dowling states that at the Robinson Deep they have two tube mills running, one with a manganese-steel lining and the other with silex lining. In comparing the results it has been found that the silex mill takes a larger feed and gives a finer product. With regard to pebbles, in the silex mill they retain their rounded shape, while in the mill with the manganese-steel lining they become much flattened. This may be attributed to the pebbles slipping upon a smooth lining.

The great trouble with the usual forms of liners has been the serious delays caused by renewals. This has led manufacturers as well as users of tube mills to seek some form of lining which would do away with the necessity for frequent repairs.

The latest form of tube-mill lining is the so-called El Oro lining devised at Mill 118.[17] This lining is shown in Fig. 624. As may be seen in the cut, cast-iron ribbed plates are bolted to the mill shell, so that the ribs form continuous longitudinal channels. After the mill has been charged with a load of pebbles and revolved a few times a portion of the pebbles becomes tightly wedged in the channels and forms a very effective grinding surface. Places in the channels from which the pebbles have become dislodged are quickly refilled during subsequent revolutions of the mill. This form of lining bids fair to give continuous and efficient service for two or three years. At the present time, linings which have been in active service for 8 months show no appreciable wear.

A more recent lining than that shown in the cut has the plates so cast that where two plates join, the ribs also join — being half their natural thickness on these outside joints — the two ribs thus making one regular rib. There is, therefore, no possibility of a pebble being dislodged when once wedged in place, due to slight play or vibration between plates. These liners are reported to be much more satisfactory than the old form, less expensive in first cost as well as in upkeep.

The cost of silex lining varies with the quality from 60 cents to $1 per square foot when 2½ inches thick, to $1.60 per square foot of grinding surface when 4 inches thick. Records of silex linings 2½ inches thick in Colorado practice show a service of 6 months, while South African records show service of 2 years and over. A 4-inch silex lining lasts 1 year with average Colorado ores.

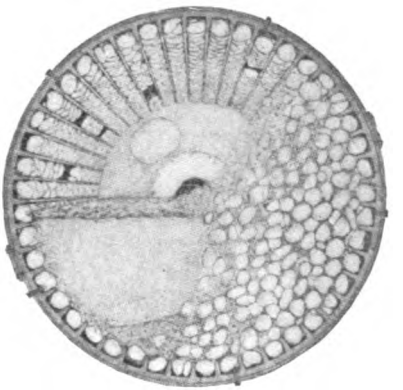

FIG. 624. — EL ORO TUBE-MILL LINING.

§ 1017. FEED OPENING. — The usual method of feeding tube mills is by a hopper and pipe, the pipe entering the mill through a hollow trunnion. In case the feed hopper and the pipe that enters the mill come in one piece it is advisable to cut the pipe off as close to the hopper as possible and insert a flange or sleeve so threaded as not to be screwed off by the motion of the mill.[45] The pipe will have to be made a little longer than the piece cut off, to permit of setting the hopper back far enough to get at the packing gland. By this means the pipe can be quickly replaced when worn. The best packing to use is ⅜-inch common hose cut in individual rings. There should be a dewatering cone directly over the feed hopper to get pulp as thick as possible for the mill, 1 to 1 or less. W. R. Dowling[35] states that at the Robinson Deep the best results so far obtained have been on pulp running 0.75 water to 1 ore. The overflow from the above-mentioned dewatering cone can be carried over the mill into the discharge box to dilute the pulp again so as to make it flow through the launders.

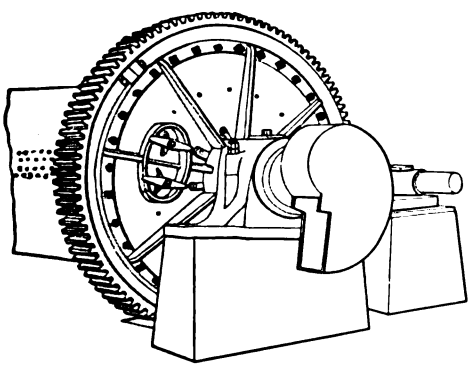

FIG. 625. — SCOOP FEED FOR TUBE MILL.

The Denver Engineering Works[17] is now furnishing with wet-crushing mills a scoop feed device as shown in Fig. 625. A tank or launder is installed at the feed end of the mill from which the scoop lifts a quantity of pulp at each revolution of the mill, feeding the same directly through the hollow trunnion into the mill. This device ensures regularity of feed to the mill, and effects a high efficiency in the performance of the machine besides dispensing with the stuffing box commonly used at the feed end of tube mills for wet-crushing work.

Other feed devices will be noted under the description of the various tube mills.

§ 1018. DISCHARGE OPENING. — The discharge end of the tube mill is pro-

vided with a plate or grating so arranged as to permit of the discharge of the finely ground pulp, while retaining the pebbles until they are worn so small as to be of no assistance in the work of grinding.

At El Oro [45] they have found that the end-discharge plate, or grating, discharged pebbles too large, thereby causing undue waste; and as a result these have been replaced by others containing oblong holes $\frac{5}{8}$ inch by $1\frac{1}{2}$ inches, there being 48 holes in each half plate. Experiments have been made with two mills in series which seem highly successful. Two new mills are now being constructed to run in series with the old ones. The pebbles discharging from the first mill are put into the second where a fine discharge grate is used, the pebbles finally issuing not being over $\frac{3}{8} \times \frac{1}{2}$ inch. The discharge takes place into an open box with screen having $\frac{1}{4}$-inch holes to catch pebbles.

In the case of the Krupp mill it seems difficult to understand why, when the point of discharge is as high as the point of feed, any material can pass through the machine.[56] The material to be crushed is mixed all through the pebbles. The pebbles are all striving to hurl themselves forward tangentially from the radius of the circle they are describing; some with more force than others according to weight and distance from the center of rotation. There is, as a consequence, intense squeezing between the flints, and the thick pulp surrounding them is squeezed in all directions. Thus if we take a pebble mill with no charge, and commence feeding it at one end, we find that the pulp will naturally be squeezed into the empty spaces that are to be found in the direction of desired flow. When the pulp reaches the other end it is squeezed out, the discharge thus creating a natural tendency for material to flow from the feed to the discharge.

§ 1019. PEBBLES. — The pebbles used for crushing are of the variety known as Greenland or French flints.[56] So-called Greenland flints are found on the shores of Denmark and are in reality flint nodules. These cost about $20 per ton. Ordinarily manganese-steel balls are not suitable. Pebbles used at the cement works near Florence, Colorado, come from the banks of the Arkansas River. Australian experience has shown that one pound of pebbles will crush about one ton of sand. The average charge of flints for a 5 × 14-foot mill is 4 tons, and these cost $11 to $16 per ton, depending upon quality.

Davidsen gives a formula for calculating the amount of pebbles which should be charged to a tube mill. The rule is, "If the interior volume of a tube mill is M cubic feet, the weight of the pebbles W which should be charged into the mill is $W = 44\ M$ pounds.

§ 1020. FEEDING TUBE MILLS. — Argall's plea [20] is against using any machine for crushing beyond its economic range. He apparently considers the tube mill's place to be that of crushing fine material say from 0.02 inch. No results are presented by him showing that the tube mills do their best work when fed with fine stuff. Taking a crushing and amalgamating plant in which the ore is finally reduced to $\frac{1}{40}$ inch for filter press work, he suggests as the most economical arrangement: Rock breakers, run of mine sizes to 2 inches; rolls in series, crushing wet (2–0.75; 0.75–0.24; 0.24–0.06 inches); grinding and amalgamating pans, 0.06 to 0.02 inch; tube mills, 0.02 to 0.0025 inch or 200 mesh.

In running the mill a regular feed is of prime importance, and when grinding wet, care should be taken that the pulp be not too thin. The fineness of the resulting products can be controlled somewhat by varying the rate of feed. If coarseness is required the feed is increased and vice versa. The quantity of pebbles used also effects a similar change. An increase in the amount of pebbles fed is made for fine grinding; and a decrease, when coarse grinding is wanted. Thus we have four adjustments: rate of feed, thickness of pulp, amount of pebbles, and speed of rotation.

The material used for feed must have received a preliminary crushing. The general rule is, where wet crushing of gold ores is in vogue, that the crushed material, leaving the amalgamating appliances, shall pass to hydraulic classifiers, the overflows of which deliver minutely sub-divided material, and the spigots, the sand. The sands then go to pebble mills. The pulp from the pebble mills goes to hydraulic classifiers, the material which has been crushed so that 90% or more will pass through a 200-mesh screen passing on, and the coarse material going back to the tube mill for re-grinding.

§ 1021. DIRECTION OF ROTATION. — The tube mill should rotate in such a direction as to cause the thrust on the driving pinion to be downward into the pillow block.[45] Open belts should be used wherever possible. In the case of an Abbé tube mill, providedwith spiral feed and a spiral at the discharge end, it may become necessary to reverse the spiral in order to obtain the above results.

§ 1022. SPEED OF ROTATION. — For a discussion of the proper speed of rotation for tube mills the reader is referred to § 1075 of Chapter XXVIII. The Denver Engineering Works Company [17] furnishes the figures given in Table 439 as being the proper speeds at which tube mills of various sizes should be revolved to obtain the best results.

TABLE 439. — DIAMETERS AND CORRESPONDING SPEEDS OF REVOLUTION FOR TUBE MILLS MANUFACTURED BY DENVER ENGINEERING WORKS COMPANY.

Diameter of Shell.	Proper Revolutions of Shell per Minute.
36 inches	36
42 "	33
48 "	31
54 "	29
60 "	28
66 "	26
72 "	25
84 "	23
96 "	22

If these speeds are exceeded the crushing effect of the pebbles is much reduced; there would still be some rolling and grinding action of the pebbles on the ore, but for a granular product the desired action is obtained by having such a speed that the pebbles drop on the ore particles. In wet grinding a selective action goes on in the mill, the result being that the coarser particles are crushed while the finer particles pass on directly through the mill.

§ 1023. HORSE-POWER.[56] — The horse-power consumed by a grinding mill charged with flints, as called for by the formula given in § 1019, and having the number of revolutions per minute N given by Davidsen's formula $N = \frac{200}{\sqrt{D}}$ is $P = 0.15\ M$, where M = contents in cubic feet.

The accuracy of this formula has been confirmed by a number of recent installations where power is furnished by electric motors.

This formula should be taken to apply only when the charge of pebbles corresponds to that given by Davidsen's formula. In the case of a Krupp mill, when the charge of pebbles is greater, the power required to run the mill will of necessity be proportionally greater. For instance, in case of a 5 × 27-foot tube mill, by Davidsen's formula we find the amount of pebbles required is equal to 9.3 tons, and the power required would be about 64 horse-power. If instead of 9.3 tons we use 16 to 17 tons as has been done at El Oro, the power required has been found to be 107 horse-power.

§ 1024. MANAGEMENT OF TUBE MILLS. — Tube mills should be set up with a platform over each mill and hopper over each manhole for putting in pebbles.[45] Pebbles should be brought in at this level, if possible, to avoid elevating. If a few pebbles are to be put in, two or three men will easily distribute them; if a quantity is to be added, however, it is better to fill the mill full up to the manhole, then revolve it a few times to distribute them. At El Oro the mills are kept 1 to 3 inches more than half full by measurement from the top of the tube to the pebbles, and never allowed to wear down more than 4 inches before refilling.

A leak will often start around a bolt when it is impossible to shut down. If there is a cement floor no harm results. If a bolt is entirely cut off, one should feel in the hole, and if the liner is good, put a wooden plug in the hole, pending the time of shutting down for more extensive repairs. If a leak occurs at the head of the machine, there is danger of sand cutting the gears. As a consequence, there should be a shield on the gear wheel rim to obviate this.

The supporting tires should be kept true and clean, as it has been found that the slightest irregularity, either as an original defect or as the result of operation, will cause excessive bumping resulting in the destruction of the mill and perhaps of its foundations.

§ 1025. QUALITY OF WORK DONE BY THE TUBE MILLS. — As has been previously stated, the feed to tube mills should consist of particles all smaller than 0.02 inch in diameter. For the purpose of showing what may be expected of tube mills the following examples will be given. Table 440 gives a comparative sizing test of feed and finished pulp of an Abbé tube mill in use in Guanajuato.[46]

TABLE 440. — SIZING TEST OF FEED AND DISCHARGE OF ABBÉ MILL AT GUANAJUATO, MEXICO.

Size.	Mesh.	Feed. Percent.	Discharge. Percent.
On	40	11.2	0.5
"	50	11.2	1.7
"	60	8.9	2.9
"	80	16.6	6.0
"	100	16.3	16.2
"	120	26.1	21.8
Through	120	9.7	51.2

When extremely fine grinding is being done, the discharged pulp is often sent to a classifier which separates the coarse particles from the extremely fine particles and returns the former for re-grinding. Table 441, given by O. B. Ward of the Hannon Star Gold Mines, Kalgoorlie,[56] illustrates a case of this sort. The column marked "Pulp from Tube Mills" represents the percentage of various sizes obtained in one operation, while the column marked "Finished Product" is the end result obtained.

TABLE 441. — SCREEN TEST OF FEED AND FINISHED PRODUCT OF TUBE MILL AT THE HANNON STAR GOLD MINES, KALGOORLIE.

Size.	Mesh.	Feed. Percent.	Pulp from Tube Mills. Percent.	Finished Product. Percent.
On	40	4.5	0.1	
"	60	9.5	2.0	0.0
"	80	6.8	4.2	0.2
"	100	13.1	12.3	0.5
"	150	19.0	20.3	4.0
Through	150	47.1	62.8	95.3

§ 1026. CAPACITY OF TUBE MILLS. — The capacity of tube mills varies in almost every plant. The author has tried to select a few examples to give the reader an idea as to what may be expected of these machines. The Abbé tube mills in use at Mill 103,[2] 5 feet in diameter by 22 feet long, each crush 125 tons of material per 24 hours wet grinding. The material fed is about 10 mesh and the finished product 100 mesh. At Guanajuato, Mexico, an Abbé tube mill 4 feet 6 inches in diameter by 20 feet long grinds an average of 60 tons of hard siliceous ore per 24 hours. The feed sizes range from 26 to 60 mesh, and 70% of the finished product will pass a 120-mesh sieve.

In one instance a 6 × 8-foot Alsing tube mill[6] gave a capacity of 1 ton per hour from 8 mesh to 125 mesh; and instances are given of 5 × 16-foot mills handling 100 tons per 24 hours, and grinding to 60 mesh and finer.

The capacity of a tube mill depends naturally upon the hardness of the material fed. Experience in Kalgoorlie shows a capacity for a 4½-foot machine of 38 tons of the unroasted ores of that district. The larger machines used in South Africa have a capacity of 150 tons of sand per 24 hours. The general impression there seems to be that the smaller machines are more economical in operation.

§ 1027. CONSUMPTION OF PEBBLES AND LINERS. — Table 442 gives the consumption of pebbles and liners at Mill 118.[45]

TABLE 442. — CONSUMPTION OF PEBBLES AND LINERS FOR OCTOBER AND NOVEMBER, 1905, AT EL ORO (MILLS RUNNING 95% OF THE TIME).

Tube Mill No.	October.		November.	
	Pebbles. Kilos.	Liners. Kilos.	Pebbles. Kilos.	Liners. Kilos.
3	5,165	1,365	5,370	1,360
4	8,625	729	10,625	2,589
5	7,987	1,345	16,310	2,589
Total	21,777	3,439	32,305	6,538

The mills were grinding 8,700 tons per month of battery sand, besides the return sand. In Colorado practice, the consumption of flints averages 1 pound for every 1,000 pounds of ore crushed.

§ 1028. COST OF TUBE MILLING. — The exact cost of tube milling is hard to ascertain, since so much depends on local conditions.

At the Lake View Consols, Kalgoorlie,[56] the cost for tube milling is 48 cents per ton distributed as follows:

Power	38.9 cents.
Labor	2.8 "
Flints	3.8 "
Repairs	2.5 "
Total	48.0 cents.

At Hannon's Star, as given by O. B. Ward, the costs per ton are as follows:

Power	23.41 cents.
Flints and liners	3.76 "
Labor	7.11 "
Repairs and stores	2.10 "
Total	36.38 cents or about 36 cents per ton.

These figures are probably rather extreme and are due largely to the high cost of power. The Denver Engineering Works Company [17] gives the following average figures:

Power	per ton	3.60	cents.
Wages	" "	2.82	"
Liners	" "	2.00	"
Maintenance	" "	1.36	"
Pebbles	" "	1.16	"
Sundries	" "	.48	"
Total		11.42	cents.

At Mill 103,[13] the cost of tube milling has varied from 9 to 20 cents per ton of material treated. A Portland cement company using Davidsen tube mills[31] and granulators in the year 1905 made a careful accounting and, after having produced over one half million barrels of cement, reported the cost per barrel for granulator hours, tube-mill hours, and repairs to have been 3 cents per barrel of cement produced, including both the grinding of the raw material and the clinker. A very large number of these tube mills are being used in the cement industry.

From the data at hand it would seem to the author that under average conditions 25 cents per ton should cover all expenses.

§ 1029. EFFICIENCY OF THE TUBE MILL. — In consideration of the increasing importance of tube milling, the question of determining the amount of useful work performed by this class of machine becomes not only of general interest, but of very great importance.

The method employed until very recently in South Africa[36] is based simply upon the diminution of the + 60-mesh grade and the increase of the − 90-mesh grade, as shown in the average grading of the pulp leaving the battery, and of the pulp leaving the cyanide works. Thus:

Grade.	Percent. Battery Pulp.	Percent. Final Pulp.	Percent. Difference.
+60	32	10	22
+60−90	12	14	.....
−90	56	76	20
.....	.....	.....	42

This 42% multiplied by the number of tons of ore crushed by the stan during the month is taken as an index of the tons of sand re-ground. Thi of course simple and would be all right if all the mills were working under same conditions; but the assumption upon which the method is based is n seriously at fault, that is, that the same amount of power is required to cr material through 60 mesh whatever its original size.

S. H. Pearce and W. A. Caldecott have made a very careful study of question and their work is of great importance. At the start they very prop discard the mesh system of screen measurement as obviously useless for exact work and define their sieves strictly by the diameter of aperture. 90-mesh screen having been found to have an aperture 0.006 inch in diam and the 60-mesh screen an aperture 0.010 inch in diameter. The m suggested by them for drawing conclusions from a grading analysis is l upon Rittinger's theory. See Vol. I., page 305.

This assumes that the work done in crushing is proportional to the su exposed by crushing. The problem becomes the mathematical one of mining the relative surface of the grains of pulp before and after passing th the tube mill, assuming similar shapes and equal weights of all the pa included in each successive grade. Since for any definite weight of o total surface area varies inversely as the diameter, then the relative s exposed by each grade may be determined by dividing the weight of that by the average diameter of the particle in the grade. Hence at the s

sizing test of the pulp is needed; and next, one must determine the average diameters of the particles in each of the various sizes made. The most natural assumption to make was that the arithmetical mean between two sieve sizes represented the average diameter of the particle of that grade. In this way the following results were obtained:

Grade. Inches.	Mean Diameter. Inches.	Before.		After.	
		Weight.	Relative Surface.	Weight.	Relative Surface.
−0.024+0.010	0.017	0.32	18.8	0.01	5.9
−0.010+0.006	0.008	0.12	15.0	0.14	17.5
−0.006+0.000	0.003	0.56	186.7	0.76	253.3
.....	.....	1.00	220.5	1.00	276.7

Additional relative surface exposed = 56.2 − 25.4 percent.

In the foregoing illustration the sieves used had aperture diameters of 0.024, 0.010, and 0.006 inch respectively. Before proceeding it may be well to consider just what is meant by the average grain. If one refers merely to the average of two sieve sizes, or to the grain midway between the largest grain that will pass through one size and the smallest grain that will rest upon the next sieve of a series, then the arithmetical mean of the two sieve sizes is surely what we want. In this case, however, we seek the crushing efficiency of a machine; the idea of work has now presented itself and this must necessarily change our ideas as to what constitutes an average grain. Under these conditions E. J. Laschinger defines the average grain substantially as follows: "Starting with Rittinger's theory, suppose we have equal unit weights of particles of diameters 1, 2, 3, 4, 5, 6. The relative measure of work done would be $1, \frac{1}{2}, \frac{1}{3}, \frac{1}{4}, \frac{1}{5}, \frac{1}{6} = \frac{147}{60} = 2.45$, or the average work per unit of weight would be $\frac{147}{360}$ or 0.4083. The diameter now of the particles (if the whole product were of this uniform size) which would require this work done on it is the reciprocal of this or 2.449. Hence the average grain from the point of view of work done is 2.45 and not 3.5 as would be indicated by the arithmetical mean." This relation has been further expressed by Laschinger in a formula as follows:

$$d = \frac{d_1 - d_2}{\log_e \frac{d_1}{d_2}} = \frac{d_1 - d_2}{2.3026 \log \frac{d_1}{d_2}}$$

where a = average diameter of particles in grade.
d_1 = maximum diameter of particles in grade.
d_2 = minimum diameter of particles in grade.

Applying this formula to the foregoing illustration, and assuming that the smallest particles in the crushed product have a diameter of 0.001 inch, the following result is obtained:

Grade. Inches.	Average Diameter. Inches.	Before.		After.	
		Weight.	Relative Surface.	Weight.	Relative Surface.
−0.024+0.010	0.01595	0.32	20.1	0.10	6.3
−0.010+0.006	0.00783	0.12	15.3	0.14	17.9
−0.006+0.0001	0.00144	0.56	388.6	0.76	527.4
.....	.....	1.00	424.0	1.00	551.6

Additional relative surface exposed = 127.6 − 30.1 percent.

On the other hand, if we assume the diameter of the smallest particle to be 0.001 rather than 0.0001, the additional relative surface figures 50.4 = 25.6%. This shows the necessity of finer screens or other method of determining the sizes smaller than 0.006. The author suggests that the elutriation method (see § 1162), as applied by him for determining the velocity of quartz and galena grains falling in water might be applied for the solution of this problem. This method would do away entirely with the screen question. If screen sizes are taken sufficiently near one another the difference between the arithmetical mean and the logarithmic mean, as obtained from Laschinger's formula, is of no consequence. In mill work, however, where only a few screens are made use of, as in the case of the illustrations given, Laschinger's formula seems to give the correct solution of the problem.

§ 1030. GENERAL TUBE MILL NOTES. — The Wellman-Seaver-Morgan Company [57] states with reference to the tube mill which was originally used in the cement industry, and which is becoming quite as important a machine in ore dressing, that these mills were originally built 22 to 25 feet long, but that it has been found that the length from 12 to 16 feet is ample where used for re-crushing ores. The diameter mostly called for is 5 feet, and the usual length called for is 14 feet; the shell being made of ½-inch steel plate. This seems to agree with South African practice where there seems to be an impression that the very large mills are not as economical in operation as the smaller mills. A 12 and 14-foot mill requires approximately 50 horse-power to start, and about 25 horse-power to run continuously, depending on conditions.

Mills in use at Johannesburg,[56] under the control of the Rand-Eckstein Company are 5 feet 6 inches in internal diameter and 22 feet long. The shells are of steel plate ⅝ inch thick, lined with 6-inch silex lining, and when ready to run will weigh 35 tons. Five tons of pebbles are charged and 60 horse-power is required when running wet.

At Mill 118,[45] they have a No. 5 mill, 5 feet diameter by 27 feet long inside measure, containing 16 to 17 tons of pebbles and 8,640 kilograms of liners and requiring 107 horse-power. They also have a No. 3 mill, 4 feet 1 inch by 19 feet 9 inches, making 32 revolutions per minute, containing 7½ tons of pebbles, 4,520 kilograms of liners and requiring 60 horse-power. No. 3 mill has been determined to be most economical, and no other size will be installed.

TUBE MILLS WITH CENTRAL END DISCHARGE.

§ 1031. THE ALSING PATENT CONTINUOUS FEED AND DISCHARGE PULVERIZING CYLINDER [5] is one of the best of the modern machines designed for extremely fine grinding. (See Figs. 626*a* and *b*.)

The machine as shown in the cuts consists of a steel cylinder with feed hopper feeding the mill through a hollow trunnion at one end, and discharging through a hollow trunnion at the other end. The mill is supported by three wheels at each end and three wheels in the center. One wheel in each group is in the center of the bed plate and so arranged as to carry the whole weight of the machine, while the other two wheels are placed one on either side and act merely as guides to keep the cylinder always on the center wheel. These wheels run on tires upon the cylinder and the cylinder is driven by the frictional contact of the mill resting on the center wheels to which the power is transmitted. Wood, silex, buhrstone, porcelain, iron, or steel linings are used as may seem best fitted for the case in hand.

Details as to the dimensions, etc., of these machines, as indicated in the manufacturer's catalogue, are shown in Table 443.

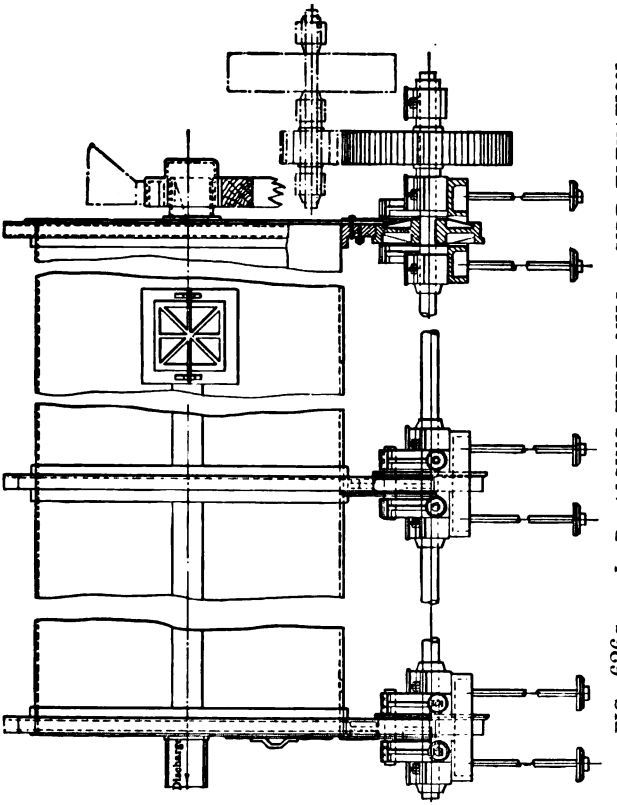

FIG. 626a. — J. R. ALSING TUBE MILL. SIDE ELEVATION.

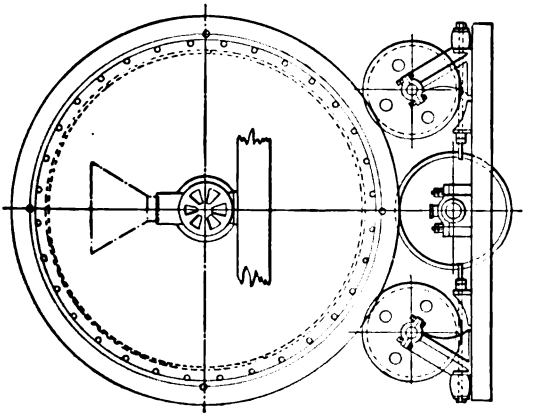

FIG. 626b. — END VIEW.

TABLE 443. — DIMENSIONS OF ALSING TUBE MILLS.

No. of Cylinder.	Diameter of Cylinder. Feet.	Length of Cylinder. Feet.	Shipping Weight Complete. Pounds.	Floor Space Required. Feet.	Amount of Pebbles Furnished. Pounds.	Size of Pulley. Inches.	Speed of Pulley. Revolutions per Minute.	Speed of Cylinder. Revolutions per Minute.	Horse-power Required.
1	6	24	57,000	7x31	19,000	72x18	100	20	55
2	6	20	50,200	7x26½	15,000	60x20	100	20	45
3	6	16	41,400	9x22	10,000	60x14	135	22	35
4	6	8	22,000	8x16	8,800	36x10	105	26	15
5	5	30	60,000	7x36	16,000	70x20	100	22	60
6	5	22	43,000	7x28½	10,350	60x18	100	25	40
7	5	8	16,000	6x15½	6,500	36x10	120	30	15
8	4½	8	13,000	6x15½	4,000	32x10	130	32	12
9	3½	8	10,000	5x15	2,500	30x10	155	35	10
10	3	8	6,000	5x15	2,000	30x8	160	40	8

§ 1032. THE DENVER ENGINEERING WORKS COMPANY [17] manufactures tube mills for ore crushing. These mills consist, in general, of a cylinder revolving about a horizontal axis, driven by a machine-cut gear bolted to either the feed end or discharge end of the cylinder. The usual method of coupling to the motive power is by means of a counter-shaft upon which is mounted a belt pulley and pinion meshing into the large gear bolted to the shell of the mill. The mills are of the trunnion type. The ore to be crushed is delivered to the inside of the shell through a hollow trunnion on one of the heads; and discharged through the other hollow trunnion on the opposite head. The ore is crushed to 6 mesh or finer before being fed. For dry crushing, a suitable device is provided at the feed end for the purpose of effecting a positive feed of ore to the inside of the shell; but in wet crushing, no feed mechanism is required.

§ 1033. HARDINGE CONICAL TUBE MILL. — The Hardinge tube mill [26] introduces a new principle in tube-mill practice, namely the sizing action of a rotating cone. If a double cone, Fig. 627, be charged with a mixture of coarse and fine particles and rotated upon its horizontal axis, the fine particles crawl up nearer the axis of rotation, while the coarse particles tend to segregate where the two cones are joined. By reason of this action the coarse pebbles exert their grinding action upon the coarser ore particles, while the lighter pebbles are at the same time working on the partly ground ore. The mill is so designed as to permit particles that are already sufficiently fine to pass directly through the mill, whereas in a long cylindrical mill, if a particle is crushed in the first foot, it still has to travel the entire length of the mill and be subjected to unnecessary grinding before it can be discharged. If in the cylindrical mill the particle, for any reason, is not sufficiently ground, it is discharged as soon as it reaches the discharge end of the mill. In the case of the conical mill, the particle must be of the desired fineness before it is discharged.

The conical mill costs about one-half as much as the cylindrical mill of the same capacity.[59] A 6-foot Hardinge mill has a capacity of approximately 50 tons per 24 hours, using about 15 horse-power or 3.3 tons per horse-power per day. This compares very favorably with the tube-mill practice of the day.

§ 1034. THE GATES TUBE MILL, manufactured by the Allis-Chalmers Company,[4] finds an extended use in the cement industry and, in fact, wherever this class of machine is used. For use in grinding cement, the Allis-Chalmers Company recommends that the clinker should be first reduced to 20 mesh or finer by ball mill, and then reduced to market fineness, which is at least 92% through 100 mesh, in the tube mills. The point upon which they lay special emphasis in recommending tube mills for cement work is that the tube mill is a perfect mixer, and hence renders great assistance to a plant in producing a product free from streaks of cement of varying fineness.

The most popular size for cement work is the 5 × 22-foot mill. This machine has a capacity of from 14 to 20 barrels per hour, the quantity depending upon the hardness, age, and fineness of the clinker. Seventy to seventy-five horse-power is required for running, and about 125 horse-power momentarily for

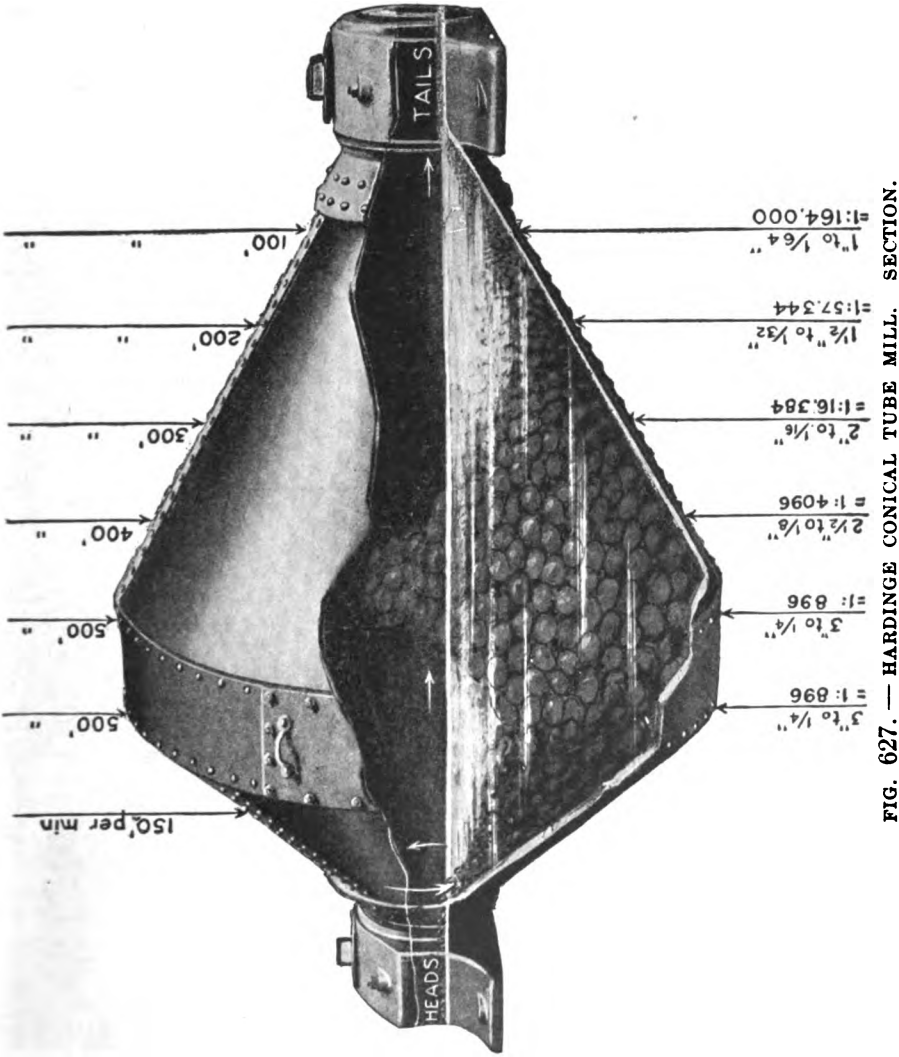

FIG. 627. — HARDINGE CONICAL TUBE MILL. SECTION.

starting. The machines are all of the trunnion type. The Allis-Chalmers Company makes tube mills for grinding either wet or dry.

PERIPHERAL DISCHARGE TUBE MILLS OF THE DAVIDSEN TYPE.

§ 1035. The Davidsen Tube Mill, made by F. L. Smidth & Company,[51] is of the trunnion type and differs from the mills already described only in the peripheral discharge shown in Fig. 628.

§ 1036. THE ABBÉ TUBE MILL,[1] while in general principle and appearance closely resembling other makes of tube mills, differs from these widely in matter of feeding and discharging the finely ground material. The machine is made in two forms: a trunnion type, and a wheel and tire type. The Abbé Company is apparently of the same mind as the J. R. Alsing Company with regard to the relative merits of these two types, both concerns stating that an enormous

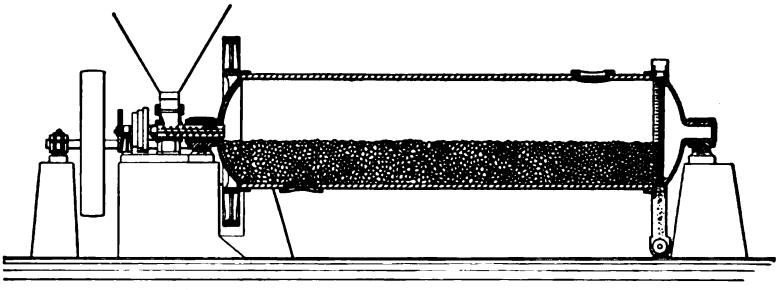

FIG. 628. — SECTION OF DAVIDSEN TUBE MILL.

saving of power results from adopting the wheel and tire type. Fig. 629*a* gives a very good idea of the method of feeding. In the cut the two plates, *A* and *B* in front of the spiral were made of glass, so that the material *D* might be seen in the receiving chamber between the two plates, and also *E* in the spiral as it travels around the same toward the center of the mill. The outside plate *A* has only the round opening at its center, through which the material is delivered from a pipe or chute into the receiving chamber, this chamber being separated from the spiral proper by the second plate *B*, having the crescent-shaped opening *C*, located where the spiral starts at the circumference, and through it the material passes into the spiral. At every revolution of the mill when the opening *C* is at the bottom, a certain quantity of material enters

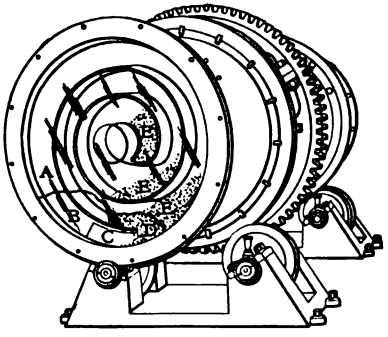

FIG. 629*a*. — MODEL SHOWING SPIRAL FEED OF ABBÉ TUBE MILL.

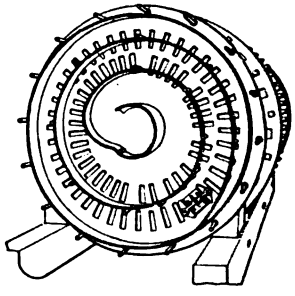

FIG. 629*b*. — SPIRAL END DISCHARGE.

the spiral, and, as the machine revolves, is lifted to the center, where it enters the grinding chamber. Thus after two or three revolutions there is a constant feed of a certain amount of material. In the regular machine, the plates *A* and *B* are made of cast iron instead of glass, and the plate *B* has a hole in the center covered by a plate which forms a manhole. The spiral feed has given the Abbé tube mill a very prominent place among machines of this class, doing away as it does with all forms of troublesome feeders. The spiral discharge, Fig. 629*b*, by picking up the pulp from the lowest point, gives a more uniform

pulp in case of re-grind for concentrating mill than the overflow discharge can possibly give. The latter is of necessity a classified product with the heavy mineral grain of smaller size than the gangue. The peripheral discharge of the Davidsen mill accomplishes the same thing. The machines are made in all sizes to suit conditions, and may be used for grinding either wet or dry.

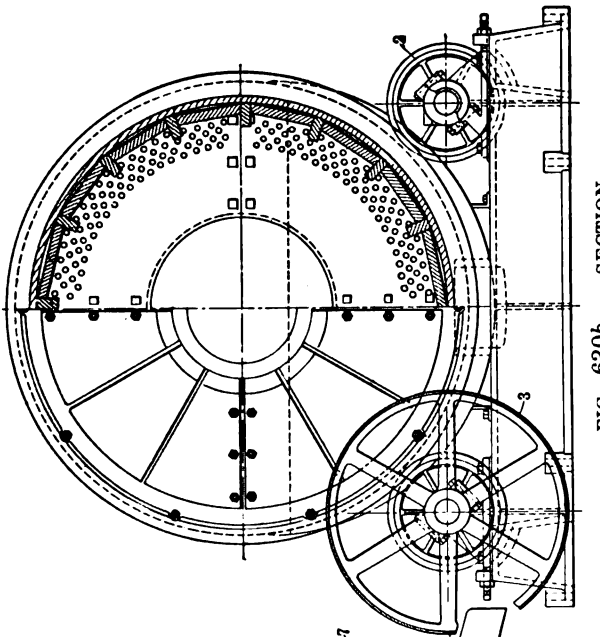

FIG. 630*b*. — SECTION.

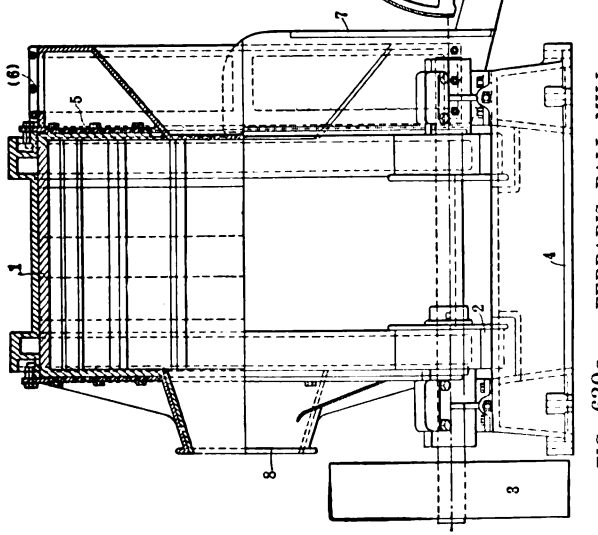

FIG. 630*a*. — FERRARIS BALL MILL.

§ 1037. THE FERRARIS BALL MILL (see Figs. 630*a* and *b*), made by the F. M. Davis Iron Works Company,[15] consists of a drum (1) supported on four carrier wheels (2) which are driven by suitable mechanism (3), turning the drum by friction around its longitudinal axis. The carrier wheels are mounted on steel

shafts which rotate in adjustable bearings secured to a heavy cast-iron base (4) of box form, making the mill entirely self-contained. The drum is divided by an annular perforated partition (5) into two compartments. The larger or crushing compartment is lined with rough manganese-steel plates with projecting ribs, and contains about 900 pounds of forged-steel balls from 3 inches to 6 inches in diameter. The smaller or screening compartment is divided into a series of pockets by means of a cone projecting into the crushing compartment and a series of radial partitions extending therefrom. The periphery of this compartment is open and is surrounded by a screen (6) of the desired mesh. The material passing through the screen falls into a housing (7) surrounding the lower half of the screening compartment. The ore to be crushed is fed into the central opening (8) of the crushing compartment; and, when reduced to pieces smaller than the holes in the annular partition, passes through into the screening compartment, where the material which is fine enough passes out through the screen, and the oversize is elevated by the radial partitions until it slides back on the surface of the cone into the crushing compartment, when it undergoes further crushing.

The capacity of the mill in tons per 24 hours on quartzose ore, receiving the material broken by breaker to pass through a 2-inch ring and delivering a finished product, is shown approximately in Table 444.

TABLE 444. — CAPACITY OF FERRARIS BALL MILL IN TONS 24 HOURS TO MESH INDICATED.

Mesh	10	12	16	20	30
5-foot mill, tons 24 hours	50	40	35	30	25
6-foot mill, tons 24 hours	100	80	70	60	50

The Ferraris ball mill is designed for wet crushing; and, owing to its granular product and small percentage of slimes, is especially adapted for crushing ores to 12 mesh or finer, for concentration on Wilfleys or other bumping or shaking tables, or for wet crushing and cyanidation. By the use of the mill for crushing for concentration, screens and elevators are dispensed with and the plant greatly simplified. Thus a plant of say 50 tons per day capacity would consist of a 7 × 10-inch breaker, two ball mills, hydraulic classifier, and four Wilfleys or similar concentrating tables.

This mill has been in successful use at the works of the Société Minière du Gard at Dufort, France, for several years, also at Mill 137. At both places it is employed for the fine crushing of mixed sulphide ores for concentration.

The mill is made in two sizes as given in Table 445.

TABLE 445. — SIZES, HORSE-POWER, ETC., FERRARIS BALL MILL.

Size Feet.	Outside Dimensions			Discharge above Floor Inches.	Feed above Floor Inches.	Diameter. Inches.	Pulley.		Horse-power.	Total Weight. Pounds.
	Width. Feet.	Length Feet.	Height Feet.				Face. Inches.	Revolutions. Minute.		
5	7	8	7	12	30	48	8	90	6	15,000
6	8½	9½	9	12	36	60	8	100	10	25,000

§ 1038. THE GATES BALL MILL (see Fig. 631), manufactured by Allis-Chalmers Company,[4] is in principle identical with the Grüson ball mill. (See Vol. I., Ore Dressing, page 260.) Like the Grüson ball mill, the Gates consists of a cylindrical mill revolving upon a horizontal axis. This cylinder consists of two circular side plates provided with ten inwardly projecting and

eccentrically located shelves. The side plates have attached to them rigidly, at their centers, hubs which are mounted on a heavy shaft which revolves in dust-proof bearings. One of the hubs has suitable openings through which the material is automatically fed by means of the Gates patent feeder. Resting upon the ten inwardly projecting shelves and reaching from one side plate to the other and bolted thereto are the wearing plates. These are eccentrically arranged so that one plate passes behind the next one, thus producing a step, and also providing an opening through which oversize from the outer screens is returned to the mill. The tumbling of balls and material, due to revolving the drum, rapidly reduces the material to fine grit and powder, the steps serving to greatly increase the beating action of the balls against the material. This is shown in the cut; and as the screens, method of operating, and so forth, is exactly as in the Grüson ball mill, these will not be described at greater length here.

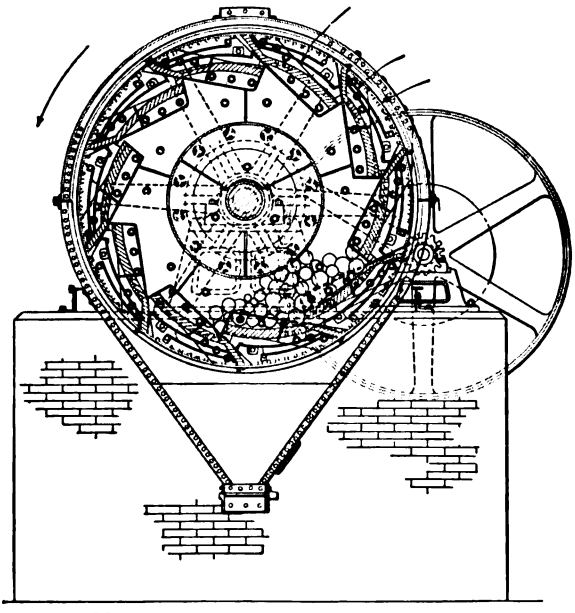

FIG. 631. — SECTION OF GATES BALL MILL.

These machines are built in the sizes given in Table 446.

TABLE 446. — SIZES, CAPACITIES, ETC., OF GATES BALL MILL.

Size No.	Weight of Mills. Pounds.	Weight of Balls Charged. Pounds.	Capacity on Cement Clinker to 20 Mesh.	Horse power Required.
7	29,500	3,000	2.4 to 3.2 tons per hour	30–40
8	41,100	3,500	3.6 to 4.8 " " "	40–50

§ 1039. THE HUMBOLDT ENGINEERING WORKS COMPANY[29] makes a wet ball mill, Figs. 632*a* and *b* which is especially designed for grinding roughly broken ore and middlings from jigs.

The grinding drum and side cheeks of the wet ball mill are made of steel and chilled iron. The drum is formed of separate cross-bars, curved on both sides, which form an undulating grinding surface. These cross-bars are bedded on and bolted to ring-shaped flanges cast on the side cheeks. The ring flanges have trough-shaped recesses suitable to the curvature of the bars. This arrangement insures a steady bedding and attachment of the cross-bars, and obviates the risk of breaking the flanges.

The interior undulating surface is said to add greatly to the reducing effect of the mill, as the material to be ground is prevented, together with the balls, from sliding over the inner surface of the grinding drum, being lifted again and again high up the side, and thrown off by the undulations.

The material broken falls through suitable slots between the cross-bars upon screens with coarse perforations, and through these upon the fine delivery screens round the periphery of the mill. The coarse material which does not pass the screens is continuously returned to be further reduced. In consequence of the percussive action of the balls, the screens remain very open; and the outer screens are sprayed to prevent them from blinding. The mills are made in a number of sizes and of different capacities to suit various requirements.

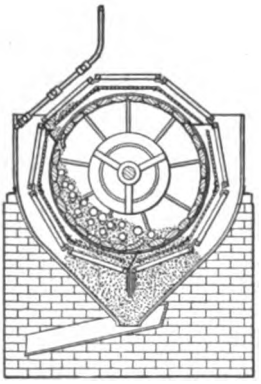

FIG. 632*a*. — CROSS-SECTION OF HUMBOLDT BALL MILL.

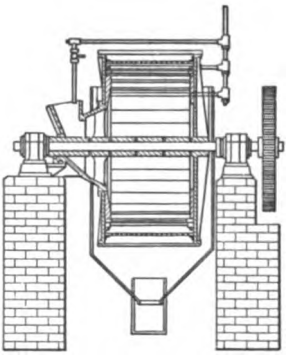

FIG. 632*b*. — LONGITUDINAL SECTION.

§ 1040. BALL MILL NOTES. — An engineer of Allis-Chalmers Company, who was for some years in Australia, furnishes the following interesting data concerning the use of ball mills with forged-steel balls at one of the leading reduction works in Kalgoorlie district.

The process there usually began with a Gates breaker; but it was found that the ball mills gave excellent results when fed directly with ore, 3% of which, by weight, would not pass a 6-inch ring, and 75% of which would not pass a 2-inch ring. The mills so fed were able to furnish 33 tons of product per 24 hours such as would pass a 20 mesh screen. A sizing test of the crushed product is given in Table 447.

TABLE 447. — SIZING TEST OF BALL MILL PULP.

Through	20 on	40 mesh	24.1	percent.
"	40 "	60 "	9.4	"
"	60 "	80 "	6.2	"
"	80 "	100 "	6.6	"
"	100 "	150 "	3.2	"
"	150 "	200 "	4.2	"
"	200 "		46.3	"
Total			100.0	"

A glance at the above results shows the marvelous work of the ball mills. It will be observed that nearly half of the material was reduced to a state of division finer than 200 mesh.

One steel ball weighing 18 pounds added daily to each mill preserved the balance of steel in the mills; while the grinding plates and side liners were replaced in complete sets every seven or eight months at the cost of about $900. Each mill made 25 revolutions per minute and required 24 indicated horsepower. The ore crushed at the plant mentioned was calcareous and siliceous with gold in the form of tellurides. Forged-steel balls have done away with all the trouble which formerly arose from the uneven wear of cast-steel or chilled-iron balls.

Brooke[23] says that on Kalgoorlie ores, in feeding Krupp ball mills, it had been found best to feed 2½-inch stuff. If fine material is fed the balls become imbedded, and do less work. With fine stuff the wear on plates and balls is greater, as the mill must be run with smaller charge.

§ 1041. WEAR OF STEEL BALLS. — E. C. Vigeon [55] has furnished very interesting data concerning the wear of steel balls in a No. 6 Grüson ball mill in use at the "Sociedad Minas de Cobra de Cutter Cove," Punta Arenas, Chile, South America. This test lasted 820 hours, during which time 1739 metric tons of ore were ground through 20 mesh. The results obtained in the test will be found in Table 448.

TABLE 448. CONSUMPTION OF STEEL BALLS IN NO. 6 GRÜSON BALL MILL.

Number of Balls in Mill at Start.	Number of Balls Added during Run.	Number of Balls after Run.	Diameter of Balls. Centimeters.	Weight Balls in Mill. Kg.	Weight Balls Added. Kg.	Weight Balls after Run. Kg.
197	.....	.....	8	448.6	.....	.....
110	.....	.....	10	448.4	.....	.....
55	121	.....	12.5	449.5	943.5	.....
.....	.....	306	4.5–6.3	.....	.....	191.8
.....	.....	72	8.3–8.9	.....	.....	178.1
.....	.....	105	9.5–12.5	.....	.....	582.1
Totals	.....	.....	.....	1,346.5	943.5	952.00

This gives the total amount of steel consumed as 1338.00 kilograms or 0.77 kilogram steel per ton of ore crushed. The ore consisted of chalcopyrite in a quartz gangue with chlorite schist as country rock. The specific gravity of the crushed rock is 1.5 and the ore carries 4.5% copper.

ROLLER MILLS.

§ 1042. THE KENT MILL (see Fig. 633), manufactured by the Kent Mill Company [40] is a roller mill. As shown by the cut, the Kent mill consists of a revolving steel ring with three rolls pressing against its inner face. The rolls are convex and the ring is concave and tracks on the rolls. These rolls are supported by springs and in turn support the ring, so that the four crushing parts are free to move to pass iron or uncrushable objects, and are cushioned to take up shock and vibration and prevent breakage.

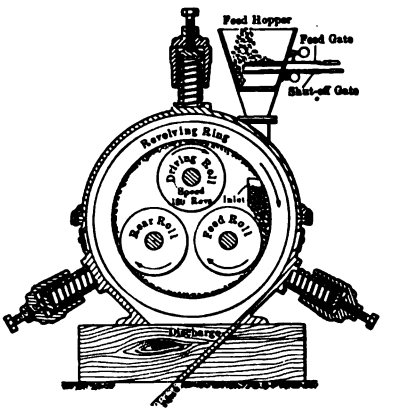

FIG. 633. — CROSS-SECTION OF KENT MILL.

The rock falls from the inlets upon the inner face of the ring. Centrifugal force holds it there in a layer an inch deep. It revolves with the ring, and passes under the rolls. The rolls are pressed by the springs outwardly against the rock on the ring with a pressure adjustable to 20,000 pounds by the screws against the springs. The rolls roll over the rock, crushing it against the ring. The crushed rock flows off each side of the ring into the casing and falls to the discharge. The body of rock between the rolls and ring causes 90% of the rock to abrade itself in crushing, thus greatly reducing the wear on the wearing parts. One instance is recorded in which a mill crushed trap rock through 50 mesh at the rate of 3 to 4 tons per hour for nearly 3 years before it became necessary to renew the grinding parts. This cost less than $200 and no other repairs had been found necessary up to that time.

Details of the machine are given in Table 449.

TABLE 449. — SIZE, CAPACITY, ETC., OF KENT MILL.

Size of machine	6 by 6 by 6 feet.
Weight	8,000 pounds.
Speed	180 revolutions per minute.
Capacity	2 to 8 tons per hour depending on material.
Size feed	2 inches or finer.
Size crushed product	8 mesh and finer.
Horse-power required	35 (for mill, separator, and elevator).

§ 1043. THE WILD MILL is manufactured by the Morse Bros. Machinery and Supply Company.[47] This mill as shown in Fig. 634 consists of a feeder, shaking screen, and crushing mill. The mill proper consists of a heavy revolving bed in which are placed two loose mullers or rollers which obtain their crushing power from the contact with the revolving ring die. This die is of rolled steel and is held in place by wooden wedges. Each of the mullers has a steel shell which is also held with wedges. Crushing takes place partly by percussion and partly by grinding.

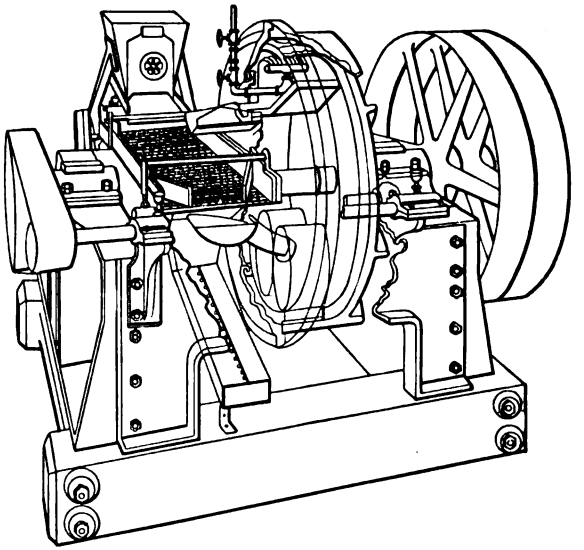

FIG. 634. — THE WILD MILL.

As the ore is fed to the hopper it comes upon the shaking screen. Here all the fines are removed and pass out of the delivery spout below without entering the mill at all. The oversize of this screen passes over the end into a spout which deposits it directly in the path of the mullers, where it is crushed between these mullers and the die ring. The centrifugal motion of the mill carries the ore to the top where a jet of water under 25 pounds pressure is constantly playing against the ring die, breaking the momentum of the ore which then drops into the hopper which carries it out of the mill and deposits it at the head of the screen, where it is screened along with the feed of the mill; any portion of the product that was not crushed to the desired fineness at this operation returns to the mill until it will pass the screen. Thus the mill works only on that portion of the product needing to be crushed finer. This is not only a saving of power and wear, but also reduces the formation of slimes.

It is claimed that the wear upon the mullers and the die ring is uniform, and that the capacity is in no way diminished thereby. The capacities and sizes are given in Table 450.

TABLE 450. — CAPACITIES, SIZES, ETC., OF WILD MILL.

Mill No.	Ring Die. Inches.	Size Mullers. Inches.	Weight Mullers. Pounds.	Horse-power	Weight Complete. Pounds.	Capacity per 24 Hours. Tons.
2	42x5½	13x6	225	3	6,400	18–30
3	60x6	20x6	490	6	14,000	40–60
4	60x9	20x9	735	8	18,000	50–75

The No. 4 mill is designed to take 1½-inch stuff, and discharge to No. 2 or No. 3 mill for finishing. This mill can, however, be run singly, giving a finished product to any desired size. Numbers 2 and 3 are built in sections for mule-back transportation.

Edge Runners.

§ 1044. The Chili mill [19] in its crudest form consisted of a circular stone with a hole through the center, through which was passed a pole, one end of which was fastened to a post, while the other end was turned by an animal. Gradually the machine was developed into a mill with two wheels having iron tires and driven by water or steam. As the use of mills of this sort spread, numerous modifications were developed, among which are the fast-motion, edge-running roller mills, now prevailing.

In its original form, with slow motion, the centrifugal action or tendency to go in a straight line, instead of its circular course, was not great. When, however, the mills developed into massive form or were run at high speed, this tendency became important, and different methods were worked out to neutralize the outward thrust on the axle. Some mills have rollers inclined toward the center, like a railroad train rounding a curve; others are trunnioned at a point below the axle, so that the outward thrust is partly diverted, and the downward pressure of the roll on the die is increased. Any fast-motion Chili mill that employs no means to utilize, at least partly, the centrifugal thrust of the roller to the crushing can hardly be rated as high-class mechanism on account of its waste of power. One scheme that has been used particularly with massive slow-motion mills is known as the Mantey offset. The Mantey offset has the axle of the wheel set behind a diameter line to which it is parallel, so that in the turning of the mill, the roller, not being true with the die, is more or less shoved over it, while at the same time it revolves. When the offset is properly proportioned to the speed at which it is intended that the mill shall be run, this scheme is thoroughly successful; but as the resistance is that of grinding, it has the objection of consumption of power and metal common to grinders in the ratio of this action. With inclined rollers properly designed, the thrust force is exerted entirely on the die without loss. A vertical roller, trunnioned at a point below its axle, utilizes the centrifugal thrust of the total weight of the roller, less that part that lies below a horizontal line through the trunnion, plus its balancing equivalent above said line. The fast-motion mills generally utilize more than two wheels or rollers. If two rollers are used instead of three or four, the machine is simpler and easier of access for repairs. Large rollers also present a more acute angle to the die and prevent gouging, so making the proportional wear less. With rapidly moving mills, however, three or four rollers are the rule.

§ 1045. The Garfield Chili Mill (see Fig. 635), manufactured by the Wellman-Seaver-Morgan Company, owes its design to Messrs. Janney and Bradley of the Utah Copper Company.[54] Thirty-three 6-foot mills of this type are in use at Mill 167 where they are doing very satisfactory work.

The design of the Garfield Chili mill was the outgrowth of 3 years' actual experience in operation continuously, side by side, of six 6-foot mills, of three different types, built by different manufacturers, crushing the same class of ore under the same conditions. The sole object in having the different types of machines was for the purpose of a comparative test of their merits as regards economy in operation and capacity. During this period many weak points were developed in the mills, and many changes were made in the various details. When the plans for Mill 167 were started, it was decided to design a new Chili mill, embodying all the desirable features of the other machines, and

to improve, strengthen, and build a mill that would be as near perfect mechanically as possible, having in mind the following points: 1. A machine that would be self-contained and standardized in all its parts; also, one that could be made either right or left hand at will. 2. A convenient and universal adjustment to the main spindle, which could be operated with ease, and at all times, while the machine is in operation, so as to secure perfect control of the crushing rollers over the face of the die, also compensating for the wear of the roller shells and die. 3. Supplementing the gravity crushing effect by centrifugal force, to aid in crushing. 4. Large and ample bearing surface throughout, applied to all

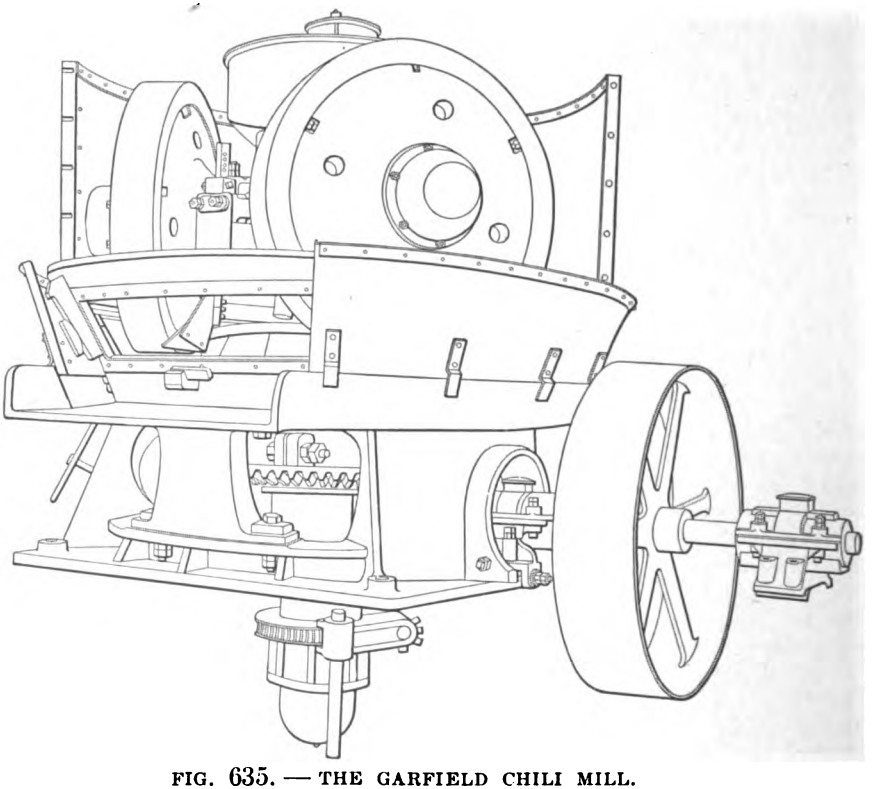

FIG. 635. — THE GARFIELD CHILI MILL.

the roller bearings, vertical spindle, etc. 5. Reversible rollers, mounted on rigid bearings, secured by universal joints to the main driving head, and independent of each other, also suitable interlocking keys for the proper centering of roller shells. 6. A perfect system of lubrication, having all the important bearings running in oil, provided with oil cellars, oil bonnets, etc., also having one central oil chamber for the proper lubrication of roller bearings. 7. Having the main mortar, or pan, so constructed that one section could be hinged and attached to the main door segment or housing, swung on heavy hinges, so that it may be quickly thrown back, permitting the removal of rollers without raising the main center or driving spider. 8. Perfect adjustment in all directions to the counter or pinion shaft, and bearings of ring-oiling type. 9. Bottom bearing so constructed that it can be withdrawn or dropped similar to that of the Gates breaker; also provided with oil bonnet, in order that the bearing will at all times be submerged in oil. 10. Accessible in all parts when necessary to make

repairs, change gears, etc. 11. All bearings bronze bushed, easily renewed when necessary, and ring-oiling counter-shaft bearings. 12. The main mortar or pan, carefully protected by wearing liners, conveniently removed or replaced. 13. Plow blades that can be removed without raising or lowering the driving head. 14. Peripheral launder under the discharge screens, with ample fall to prevent clogging, etc. 15. Bottom and top nuts, and the nuts on the roller shafts, made standard, and proper means of locking same; also proper means of starting the ring die from its seat when necessary to remove or change same.

It is difficult to make a statement as to the capacity of the machine, as this naturally varies with the character of the ore crushed. On the ore of the Utah Copper Company, which is a fairly soft porphyry, the mill will handle approximately 100 tons per day from ¼ inch to 35 or 40 mesh. An average screen analysis of this pulp is as shown in Table 451.

TABLE 451. — SCREEN ANALYSIS OF GARFIELD CHILI MILL PRODUCT.

Size Mesh.					Percent.
	On	40	mesh		5.0
Through	40	" 60	"		11.6
"	60	" 80	"		9.6
"	80	" 100	"		5.1
"	100	" 120	"		6.8
"	120	" 150	"		2.6
"	150	" 200	"		5.7
"	200				53.6
					100.0

The mill runs at the rate of 25 revolutions per minute.

§ 1046. THE WELLMAN-SEAVER-MORGAN COMPANY [57] also manufactures the Akron Chili mill, which differs in no important detail from the Garfield Chili mill. The Akron Chili mill consists essentially of six parts; the base, the mortar, the drive head with its rollers, the feeder, the driving gear, and the adjusting mechanism.

The base is a single casting, circular in outline, of heavy section so designed that driving pulleys may be located to give either a right or left-hand drive. The mortar, also a single casting, has a very heavy bottom, double ribbed, and is dowelled to the base. The mortar bottom is lined with a rolled-steel die upon which the rollers run. The screen frames are of iron and are held in place by cast-steel wedges. The mortar hub (see Fig. 636) forms a bearing for the main driving spindle (2) and is suitably bushed with a long tapered bronze sleeve (3). The drive head (4) consists of a single casting keyed to the main driving spindle and carried out to support the bearings for the three rollers. To this head are bolted plows or scrapers which are adjustable. The drive head is fitted with suitable bearings for the trunnions of the roller shaft bearings. These trunnion bearings allow the rollers to assume any angle demanded by the unevenly crushed material delivered to the mill. The feeder is an annular shaped casting bolted to the cap of the drive head and is provided with three pipes which deliver the material immediately in front of each roller, thereby insuring an even feed. The driving gear is actuated by a shaft supplied with tight and loose pulleys. This shaft is provided with a cast-steel pinion meshing with a cast-steel gear (8) (see Fig. 636), which is

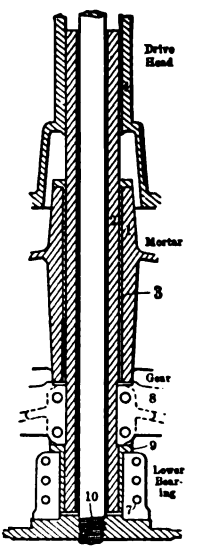

FIG. 636. — MORTAR HUB OF AKRON CHILI MILL.

bolted to a recess turned in the main driving spindle. The spindle (2) is a hollow steel casting of ample dimensions and extends from the bottom nearly to the top of the drive head. The lower end of the spindle is held by a split bearing (7), doweled to the base and fitted with bronze removable bushing (9). This bearing is in halves to permit of quick repairs. The middle and upper portion of the spindle runs in the bushing in the mortar hub. To the upper end of the spindle is attached the driving head by a sliding feather allowing the head to be raised or lowered by a central shaft (10), having no rotary motion, but provided with means for raising or lowering the driving head and hence the rollers. The lower end of this shaft is supported in the bottom plate of the base while the upper end is fitted with roller bearings and by a heavy cap bolted to the drive head. The drive head with its rollers may be lowered or raised. Ample provisions are made for lubrication.

These mills are built in two sizes as shown in Table 452.

TABLE 452. — SIZES AND CAPACITIES OF AKRON CHILI MILL.

Size. Feet.	Capacity in 24 Hours. Tons	Average Revolution of Mill per Minute.	Speed of Driving Pulleys per Minute.	Total Weight. Pounds.
5	25	35	170	32,000
6	50	30	148	48,000

§ 1047. THE LANE SLOW-SPEED MILL,[41] made by the Standard Iron Works (see Fig. 637), is a roller mill of the Chili type but different from other Chili mills in both structure and mode of operating. The machine consists of a spider which serves to carry six wheels with wooden centers, steel-faced and ball-bearing. These wheels are provided with steel tires 42 inches in diameter, 2½ inches thick, with 5-inch face and weighing 455 pounds each. These tires

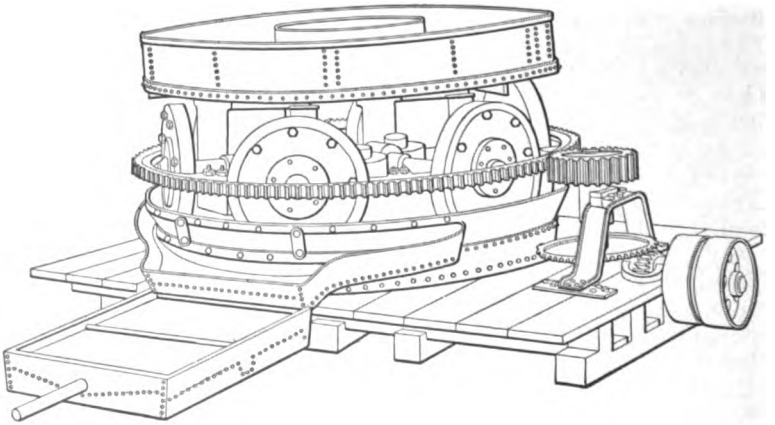

FIG. 637. — THE LANE SLOW-SPEED MILL.

run upon a track 10 feet in diameter, 2½ inches thick, and 5¼ inches face, made in sections of rolled steel and resting in a pan of riveted sheet steel. To the top of this pan is bolted the screen frame provided with 10 or 12-mesh screen which merely serves to keep coarse material from passing out of the machine. The spider is supported in the center upon ball bearings and is provided with a platform or tank above carrying 24,000 pounds of rock or scrap iron to supply crushing weight. This makes the entire crushing weight 35,000 pounds. The

arms of the spider, six in number, are attached to the driving gear, 12 feet in diameter, which receives its motion through a series of gears and causes the spider to revolve in the same manner as other Chili mills. A feeder is provided with six pipes which bring the feed directly in front of the wheels. The mill is run at a very slow speed, 8 revolutions per minute, which is said to favor amalgamation and also to give the rock particles an opportunity to settle upon the track and receive the full crushing effect of the machine. The slow speed also reduces wear and tear upon the parts of the machine. The machine has been installed in several places, and has shown itself to be a close saver of values with low cost as to repairs. Eight to twelve horse-power is required in running, and a capacity of from 50 to 60 tons in 24 hours, through 40 mesh, upon rock of ordinary hardness, is obtainable; the rock fed being first crushed through ½-inch hole.

At the Bonita Mining Company's property, State of Washington, comparative tests were made between a 10-foot Lane mill and a stamp battery consisting of five 1000-pound stamps.[42] The Lane mill was placed in front of one battery of five 1000-pound stamps with its intake low enough to receive the pulp as it came from the battery. This battery was fitted with a "¼-inch mesh" screen and the stamps were given a 6-inch drop with a 4½-inch discharge. The Lane mill was fitted with an 8-mesh screen and 6-inch discharge. The pulp from the mill was discharged to plates 5 feet wide, 18 feet long, and then to two Wilfley tables. The other battery was given a 6-inch drop with a 5-inch discharge through a 25-mesh screen, and the pulp was run over plates 5 feet wide and 20 feet long and then over one Wilfley. Hourly samples were taken from the batteries, foot of plates, and from the concentrators, for three days, which showed saving as follows: From the foot of plates, 65% in the Lane system as against 51% in the stamp system; and from the Wilfley tables 91% in the Lane system as against 80% in the stamp system. Table 453 gives a comparative sizing test of the products from the Wilfley tables.

The Lane mill made 6 revolutions per minute, and crushed 40 tons per 24 hours, while the stamps dropped 96 times per minute, crushing 16 tons through 25-mesh wire screen. Twelve horse-power was required to run the Lane mill.

TABLE 453. — COMPARATIVE SIZING TEST OF TAILINGS AND CONCENTRATES FROM STAMPS AND LANE CHILI MILL.

Sizes. Mesh.		Tailings Stamp System. Percents.	Tailings Lane System. Percents.	Concentrates. Stamp System. Percents.	Concentrates. Lane System. Percents.
Through.	On.				
.....	30	10	4	3	1
30	40	20	8	8	3
40	60	28	22	31	4
60	80	6	10	7	4
80	100	32	20	29	8
100	.....	14	36	22	80
Totals	.....	100	100	100	100

§ 1048. BRYAN MILLS VERSUS HIGH-SPEED ROLLS. — At the West Yankee Concentrator of the Detroit Copper Mining Company, Bryan mills have supplanted high-speed rolls for re-crushing jig tailings.[21] The ore is a highly altered porphyry containing disseminated particles of chalcocite. Owing to the tendency of this ore to slime, and as these slimes carry copper which it is difficult to save, great care has been taken to avoid grinding, both in the breakers and the rolls. The ore is reduced by graded crushing and the values are extracted as soon as possible. Nearly 60% of the copper is taken out before re-crushing. The middlings and tailings from the jigs are sized in hydraulic classifiers

before going to the Bryan mills, the finest product going to the vanners. The mill is divided into two parts, East and West, and until quite recently Bryan mills were used in one-half and rolls in the other. The relative efficiency of these two types of machine was thoroughly tested, the amount of slimes and time necessary for repairs being the crucial points resulting in the adoption of Bryan mills.

Table 454 gives a sizing test showing the quality of work done by the Bryan roller mills at the concentrator of the Detroit Copper Company.[22]

TABLE 454. — SIZING TEST ON BRYAN MILL PRODUCT. DETROIT COPPER COMPANY.

	Ounces. Product.	Percent Weight.	Assay Percent Copper.	Weight Copper in Size.	Percent Total Copper in Sizes.
Left on 20	2.625	11.95	0.6	7.17	6.60
" " 30	2.375	10.80	0.67	7.24	6.27
" " 40	1.375	6.25	0.85	5.31	4.92
" " 50	1.250	5.68	0.92	5.23	4.82
" " 60	2.000	9.10	1.00	9.10	8.38
" " 70	0.625	2.84	1.08	3.07	2.83
" " 90	1.250	5.68	1.31	7.45	6.85
" " 120	1.250	5.68	1.65	9.36	8.63
" " 150	0.750	3.41	1.88	6.42	5.92
" " 200	0.500	2.27	2.13	4.83	4.44
Through 200	8.000	36.40	1.20	43.60	40.10

MULLER GRINDING MILLS.

§ 1049. THE LITTLE GIANT QUARTZ MILL, OREGON MULLER QUARTZ MILL, or as sometimes called MERRILL'S MILL [44] (see Fig. 638), combines the pounding of the stamp with the grinding motion of a muller on a bucking board. The mill consists essentially of a mortar provided with screens, and a pestle which is rocked back and forth by a suitable mechanism. The fine pulp is splashed through the screen as shown in the cut. A capacity of 5 to 10 tons per 24 hours is obtained with 3 horse-power, varying with the kind of rock and the mesh of the screens. This machine is said to be a good amalgamator.

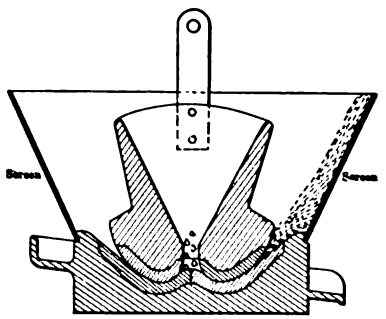

FIG. 638. — ESSENTIAL FEATURES OF MERRILL'S MILL.

§ 1050. THE HATHAWAY GYRATORY MILL [30] (see Fig. 639) resembles, in its mechanical construction, the Kinkead mill described in Vol. I., Ore Dressing, page 276. The operation of the Hathaway mill is as follows: the ore is fed into the feed hopper (2) with whatever water is necessary to secure the required degree of fineness, and drops through the feed passage (3) onto the distributing head (6), from which it falls by gravity onto the dies (8) and (9). There between the shoes (7) and the dies (8) and (9), and by the inert weight of the gyrating muller, the ore is crushed, until every particle becomes sufficiently light to be carried up by the combined flow of the separating and sizing water and over the upper sizing ring (4). A rising current of water enters the mortar through the sorting space (10). These mills are intended to reduce material to 10 mesh, 30 mesh, 100 mesh, or even 200 mesh as desired. A 3-foot mill is said to have a capacity of from 12 to 20 tons per 24 hours to 100 mesh, and 60 to 100 tons per 24 hours to 12 mesh using 2 horse-power.

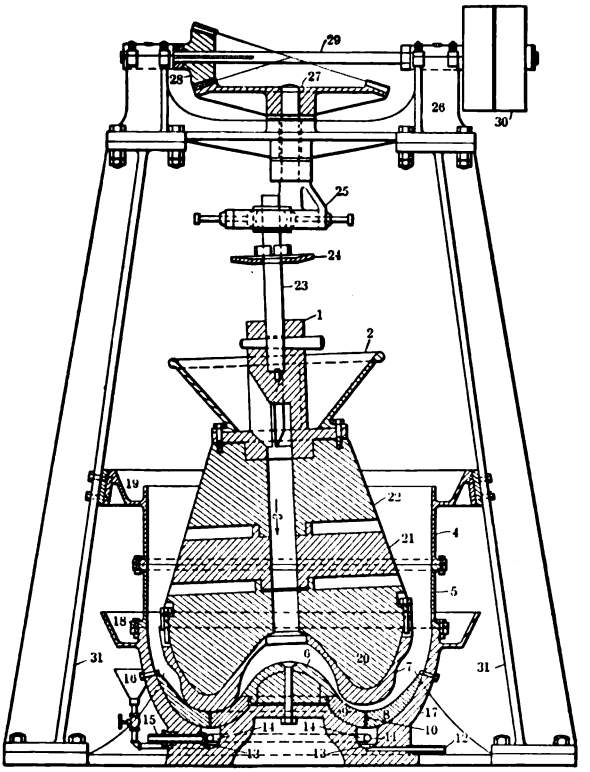

FIG. 639. — THE HATHAWAY GYRATORY MILL.

Huntington Mills.

§ 1051. The Improved Huntington Mill[49] (see Figs. 640*a* and *b*), manufactured by the Power and Mining Machinery Company, has been strengthened and simplified in practically all its parts.

The wooden frame has been replaced by a substantial iron base which makes the machine self-contained and readily accessible, does away with vibration, greatly increases the capacity of the mill, and holds all the bearings in perfect alignment. This base is so constructed that it may be placed directly upon a concrete or other foundation without any interposing timber. The step box is machined and bolted to the frame in such a way that it may be easily removed when repairs are necessary. With the use of this removable step box and counter-shaft bearing, the main driving gear may be easily removed through a manhole provided in the base. Access to the step box is obtained by a pit provided in the foundation.

The material fed should be as uniform as possible, and, in order to obtain the best results, should not be coarser than 1 inch.

These mills are made in the sizes given in Table 455.

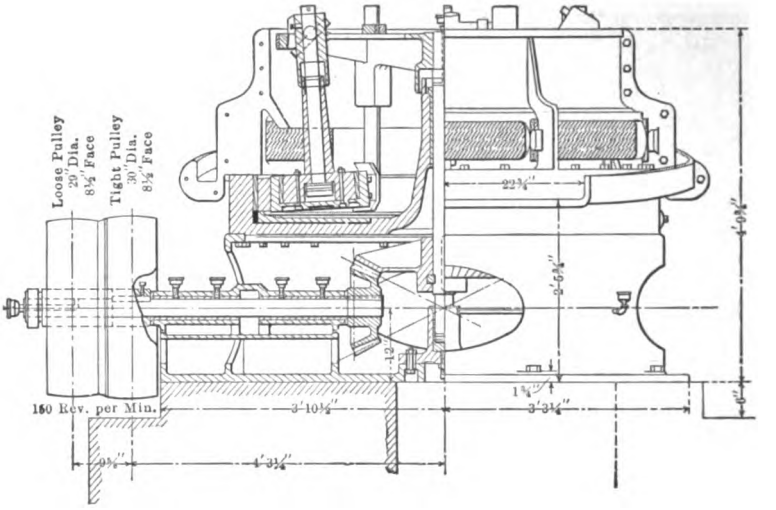

FIG. 640*a*. — IMPROVED HUNTINGTON MILL.

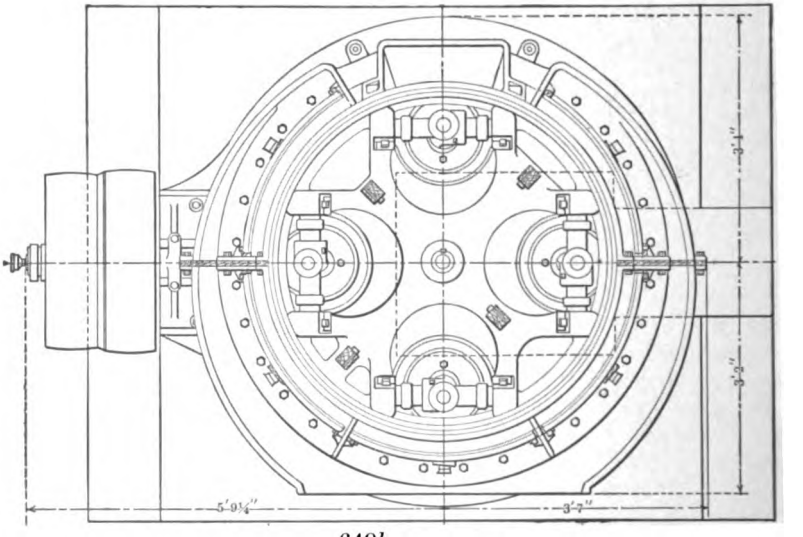

FIG. 640*b*. — PLAN.

TABLE 455. — SIZES, HORSE-POWER, ETC., OF IMPROVED HUNTINGTON MILL.

Size.	Weight. Pounds.	Revolutions per Minute.	Horse-power.
3½ feet diam.	7,100	90	5
5 " "	16,300	70	8
6 " "	25,200	55	12
6 " " heavy	44,750	55	17

For crushing fine material such as jig tailings, the speed should be 10% faster than indicated in Table 455. A 3½-foot mill in sections for mule-back transportation and an overhead driven mill are also made.

§ 1052. M. P. Boss Roller Mill.[8] The excessive cost of screening for Huntington mills of all types makes of particular interest M. P. Boss' roller mill or modified Huntington with sizing overflow. The principle of this device is as follows: The roller mill is fitted with a curb made in two halves with inclined riffles, by means of which the pulp is thrown over the edge of the curb into a double encircling launder in two halves, which effects a separation of the coarse and fine pulp, allowing the fines to pass out through an adjustable overflow while the coarse particles are returned to the machine for re-grinding.

§ 1053. Sherman Centrifugal Roller Mill. — F. W. Sherman[50] has designed a Huntington mill in which the muller stems are extended upward for about 2 feet above the yokes, and opposite pairs connected at their upper extremities by ties made of a compression spring of rubber and a turnbuckle. This scheme is said to make the mill a good fine crusher as the speed can be reduced largely over that required in the ordinary Huntington mill.

§ 1054. The New Improved Huntington Mill made by Harron, Rickard, and McCone,[27] disposes of the underneath gearing and is driven by a pulley overhead. In this mill the disc driver carrying the rollers is driven by a sleeve which is mounted on and revolves around a fixed shaft upon which it is suspended by a steel toe. The roller heads are fixed on shafts which revolve in the sleeve or yokes in which they are carried and are supported on ball bearings. The entire weight of the revolving parts of this mill is carried on the steel toe, which has a small bearing area and which runs in a bath of oil. As the yokes which carry the rollers are bushed with a self-lubricating graphite bushing, the friction and power required for driving are reduced. The roller and yoke are the most important parts of the machine and need careful attention to keep working parts cool and well lubricated. In practice it has been found that uneven surfaces on the shells caused by wear produced intense vibration, and every effort should be made to maintain an even circular face.[32] The parts wearing most rapidly were the sides of the cap where the ball races made grooves, the ball races themselves, and the interior surfaces of the yoke at the top and bottom. In course of time the yokes wear at the trunnions, but not seriously. The central portions of the yoke remain vertical. The trunnions fit into renewable journals which must be kept firmly wedged to the driving disc, to prevent wear upon this disc seating.

If the wearing parts inside the cap and yoke could be renewed by a suitable bushing much expense could be saved. As it is, the whole yoke, head, and shaft must be replaced from time to time. It is suggested that the shaft be made with a taper top to fit into the roller head, which would do away with the necessity of buying the shaft and head in one piece.

§ 1055. Huntington Mills in General. — Two distinct types of Huntington mills are in use, the under-driven geared type and the over-driven mills.[32] These mills are employed as primary and secondary crushers, the latter in conjunction with a stamp battery or roller mill. When it is used as a secondary crusher, and when dealing with large quantities, and crushing for amalgamation, the pulp should be distributed over two, three, or four plates instead of one, so as to afford ample amalgamation surface. Fine feeding, ¼ inch or less, when hard quartz is to be dealt with, gives best results.

Many object to the machines, urging that they are too troublesome and expensive in upkeep. This type of crusher has its distinct uses, especially when high freights have to be considered and when stamp mills are out of question.

§ 1056. *Foundations.* — The present tendency is to do away with wooden frames and posts, and bolt the mill securely to a foundation composed of heavy timbers and concrete.[82]

§ 1057. *Feeding the Mill.* — With under feeding the mill becomes noisy, vibrates, and wears itself out.[32] Over feeding reduces all noise until the belts break or come off, and the pulp packs in the center and along the screens and splashes over the sides. The mill requires less water than stamps and hence the pulp is liable to be too dilute. After a long series of experiments using Huntington mills in connection with stamps, best results were obtained[22] with 28 mesh on the mortar and Nos. 35 and 32 on the Huntington; using two rollers the mortar screen was changed to No. 4 mesh. Using old and irregular shells was found to be false economy.

§ 1058. *Screens for Huntington Mills.* — Table 456 gives a comparison of the capacities of two Huntington mills, *A* and *B*, of exactly the same size, and treating the same material under exactly the same conditions, with the exception of the fact that *A* was equipped with woven-wire rolled-slot screens, and *B* was equipped with punched slot screens.[25] The opening per square inch of screen area in the woven wire screen is approximately 1.5 times as great as the opening in the punched slot screen. Theoretically this should result in a more free discharge, a greater capacity, and a smaller quantity of slime. Because of the excessive blinding of the woven wire screens the above expected results were not obtained in practice. This blinding was persistent throughout the entire life of the screen.

As a result of this, the crushing of 58.43 tons per day in the mill equipped with woven wire screens, required more attention from the mill man than it did to crush the 73.57 tons in the mill equipped with punched slot screens. Ten screens of each sort were used, and the duration of the test was limited to the life of the screens. The test lasted 13.31 days in the case of mill *A*, and 12.36 days in case of mill *B*. Fig. 641 shows the rolled slot screen before and after the test, and Fig. 642 shows the punched slot screen before and after.

TABLE 456. — CAPACITIES OF MILLS A AND B. A WITH WOVEN WIRE SCREEN, B WITH PUNCHED PLATES.

Date 1905.	Rate Pounds. Mill A.	Per 24 Hours. Mill B.	Actual Pounds. Mill A.	Per 24 Hours. Mill B.
May 5	90,120	124,300	88,700	123,100
" 6	119,200	125,800	111,800	123,800
" 7	104,200	133,500	101,700	129,100
" 8	108,400	136,000	102,000	131,700
" 9	114,800	133,500	111,200	131,500
" 10	108,500	175,900	106,000	168,600
" 11	119,000	201,200	117,400	197,600
" 12	137,400	190,600	131,300	182,500
" 13	114,400	148,200	110,500	136,900
" 14	114,100	127,200	103,000	120,100
" 15	120,000	138,000	116,300	130,000
" 16	127,400	136,300	115,900	129,900
" 17	120,700	142,000	114,800	113,900
" 18	140,400	.....	124,800	.....
Total	.....	.....	1,555,400	1,818,700

Thus it will be noted that the average number of pounds per 24 hours was 116,860 in the case of mill *A*, against 147,140 pounds in the case of mill *B*; or the ratio $A : B = 58.43$ tons : 73.57 tons, or for every 2,000 pounds put through *B* but 1,580 pounds were put through *A*. The wear of screens in case of mill *A* was 0.005876 pounds per ton of ore crushed, and in case of mill *B*, 0.00762 pounds per ton of ore crushed. The woven-wire slot screens suffered a loss of 22.53% of their weight before being discarded and the punched plate suffered a corresponding loss of 26.45%. The average weight of a wire screen was 919 grams, and the average weight of a punched screen 1,187 grams.

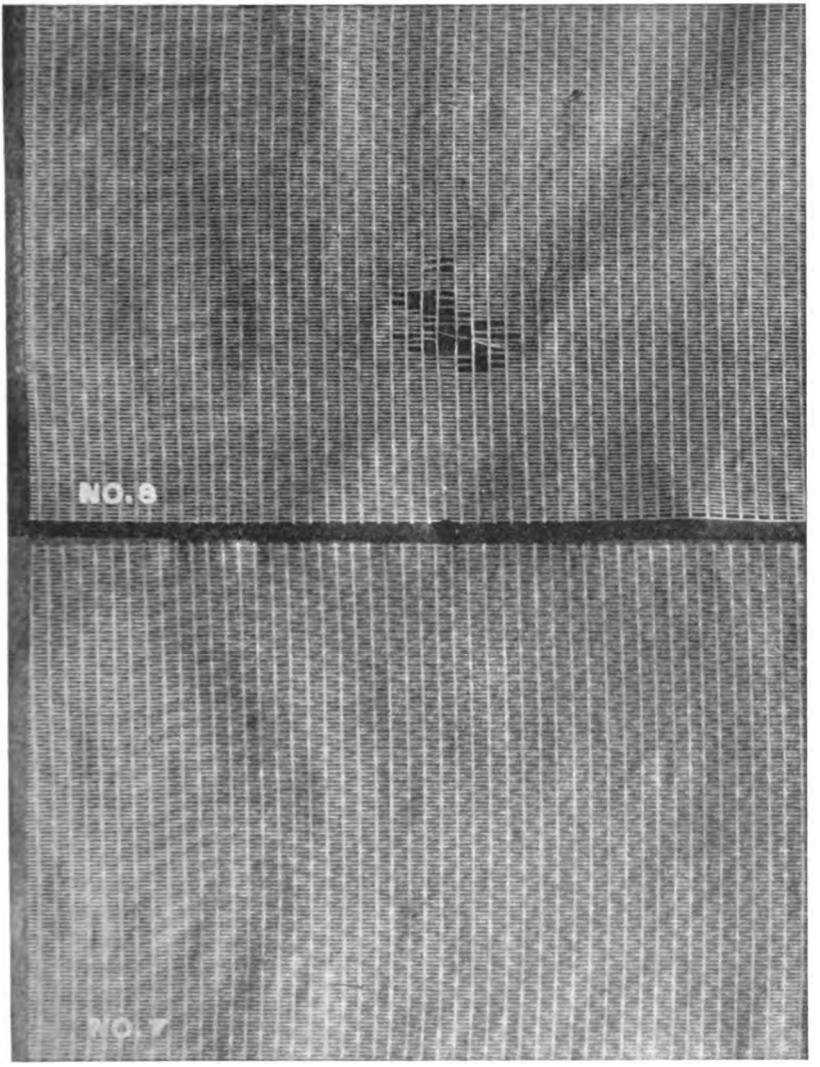

FIG. 641. — ROLLED SLOT SCREEN BEFORE AND AFTER USING.

Table 457 gives a sizing test in cumulative percents of the feed to the Huntington mills *A* and *B* and of the ground product. This table shows conclusively that the two mills were receiving similar feed and delivering products crushed to the same size.

TABLE 457. — SCREEN SIZING TEST OF FEED AND PRODUCT OF HUNTINGTON MILLS A AND B.

	Feed to Huntingtons.		Ground Product Huntingtons.	
	A.	B.	A.	B.
On 6 mesh	0.19	0.10	.....	.....
" 8 "	0.47	0.30	.....	.....
" 10 "	2.13	1.70	.....	.....
" 20 "	57.88	54.27	7.29	13.53
" 40 "	90.96	90.20	46.28	47.78
" 60 "	96.07	95.92	59.97	60.27
" 80 "	98.40	98.40	70.68	70.31
" 100 "	99.16	99.40	77.34	77.21
" 150 "	99.44	99.60	80.79	80.09
" 200 "	99.72	99.80	85.87	85.33
Through 200 "	0.28	0.20	14.13	14.67
Total	100.00	100.00	100.00	100.00

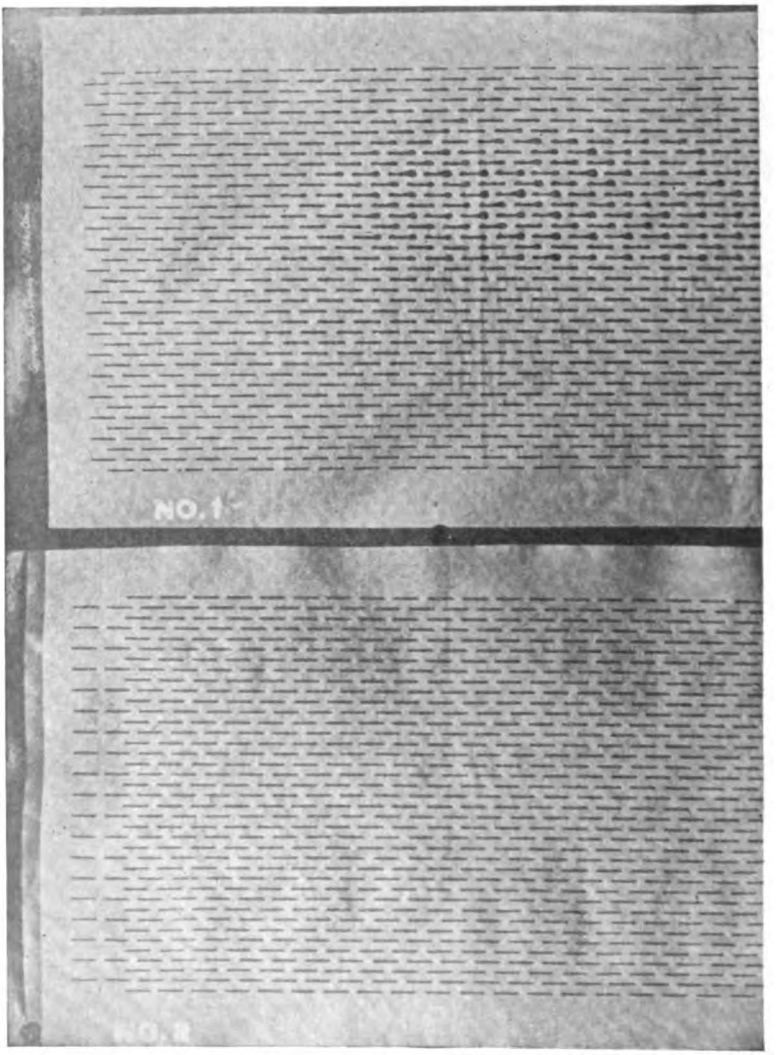

FIG. 642. — PUNCHED SLOT SCREEN BEFORE AND AFTER USING.

At Anaconda, screens with slotted holes 1 by 13 mm. are used in the Huntington mills. Cyril Parsons [32] says that a Huntington mill consumes 10 times as much screen as a 5-stamp battery. He further states that the life of diagonal slotted screens is six or seven days.

§ 1059. *Quality of Work done by Huntington Mills.* — Table 458 gives a sizing test of the feed to and crushed product from the Huntington mills in use at a large Montana concentrator.[16]

TABLE 458. — SCREEN SIZING TEST OF FEED AND PRODUCT OF HUNTINGTON MILLS WITH ASSAYS.

Size Mesh.	Feed. Percent Total Material	Assay. Percent Copper.	Discharge. Percent Total Material.	Assay. Percent Copper.
On 8 mesh	1.41	1.9	.....	.....
" 10 "	2.73	1.2	0.08	0.5
" 20 "	61.00	1.1	14.28	0.6
" 40 "	28.06	1.4	32.98	0.8
" 60 "	3.54	2.1	10.76	1.2
" 80 "	1.79	2.5	9.53	1.4
" 100 "	.74	3.4	6.46	1.8
" 150 "	.26	4.45	3.13	2.1
" 200 "	.26	5.60	5.98	2.3
Through 200 "	.21	6.63	16.80	2.5

Table 459 gives the results of careful sizing tests upon the pulp from Bryan mill, high-speed rolls, and Huntington mill, made at Mill 172.[22]

Samples screened dry and gentle sieving used.

TABLE 459. — COMPARATIVE SCREEN SIZING TEST ON PULP FROM BRYAN MILL, HIGH-SPEED ROLLS, AND HUNTINGTON MILL.

Size Mesh.	Bryan Mill. Percent.	High Speed Rolls. Percent.	Huntington Mill. Percent.
On 20 mesh	2.89	0.79	11.18
" 40 "	18.28	17.13	20.42
" 60 "	10.65	10.25	6.35
" 80 "	5.93	4.64	3.05
" 90 "	2.49	1.94	1.65
" 100 "	.....	.....	.....
" 120 "	5.04	5.07	3.52
" 150 "	2.23	1.79	1.09
" 200 "	2.77	3.05	1.38
Through 200 "	49.69	55.31	50.94

Screen on Bryan mill was 1½ mm., that on rolls 10 mesh, and on Huntington mill 2½ mm.

§ 1060. *Life of Wearing Parts.* — Die rings and roller rings are of steel. The average life of Latrobe and Midvale steel roller rings in the 5-foot mills is 32 days. Die rings of same material last 75 days. American Engineering Works' steel-roller rings last 26 days. In the 6-foot mill the Latrobe roller rings last 60 days, and ring dies about 90 days.

Cyril Parsons [32] gives Table 460, showing the life and cost of wearing parts of a top-driven Huntington mill in use in Rhodesia.

TABLE 460. — LIFE AND COST OF WEARING PARTS FOR HUNTINGTON MILL, SOUTHERN RHODESIA.

Name of Part.	Life.	Weight. Pounds.	Cost at Mine. Each.
Yoke	3 months	97	$33.53
Head shaft	4 "	232	42.77
Cap	5 "	.....	6.56
Ball races	4 "	.....	17.25
Shell	6 weeks	142	18.73
Die ring	8 "	610	65.14
Balls per doz.	6 months	.....	16.07

Attention is drawn to the high cost of spares as shown in this table. Shells wear from 1½ inches to ½ inch, and then crack and come off; if kept even, they wear longer. Die rings wear down from 2 inches to ¾ inch.

§ 1061. *Cost of Crushing by Huntington Mills.* — Table 461 gives the cost of crushing by Huntington mills at a large Montana plant.[25]

TABLE 461. — COST OF CRUSHING BY HUNTINGTON MILLS IN MONTANA PLANT.

	Total Cost.	Per Ton Crude Ore.	Ore to Huntington Mill.
Cost of supplies	$9,058.54	$0.0097	$0.0290
Labor cost of operating	12,819.11	0.0137	0.0401
Total cost	21,877.55	0.0234	0.0700

It should be said that these Huntington mills are used to re-crush middlings and have a capacity of about 75 tons in 24 hours.

The costs are given first, per ton of ore entering the mill; and second per ton of material actually treated in the Huntington mill. That these figures are not in any way abnormal is shown by Table 462 which gives the costs for the years 1900, 1901, 1902, 1903, and 1904.

TABLE 462. — COST OF CRUSHING BY HUNTINGTON MILLS AT MONTANA MILL.

	Tons Crude Ore.	Estimated Tons to Huntingtons.	Cost per Ton Crude Ore.	Cost of Ore per Ton to Huntingtons.
Year 1900	420,401.5	140,500	$0.0238	$0.0712
" 1901	443,132.5	148,100	0.0258	0.0772
" 1902	701,126	234,000	0.0276	0.0827
" 1903	828,655	277,000	0.0261	0.0781
" 1904	936,255	313,000	0.0234	0.0700

The results of experiments with thousands of tons of average Butte ores show that the 6-foot Huntington mill handles fully twice as much as the 5-foot mill, and is less trouble to keep in repair.[16]

Details of comparative operating expenses are shown below.

	5-foot Mill.	6-foot Mill.
Operating labor	$0.0156 per ton	$0.0156
Repairs "	0.0078	0.0052
" supplies	0.0374	0.0307
Power	0.0201	0.0134
	$0.0809 per ton	$0.0649 per ton

Disintegrators and pulverizers.

§ 1062. The Stroud Mill or "Cyclone Distinegrator and Pulverizer," manufactured by the E. H. Stroud and Company,[52] employs both attrition and impact to effect the pulverizing of many grades of materials from talc to

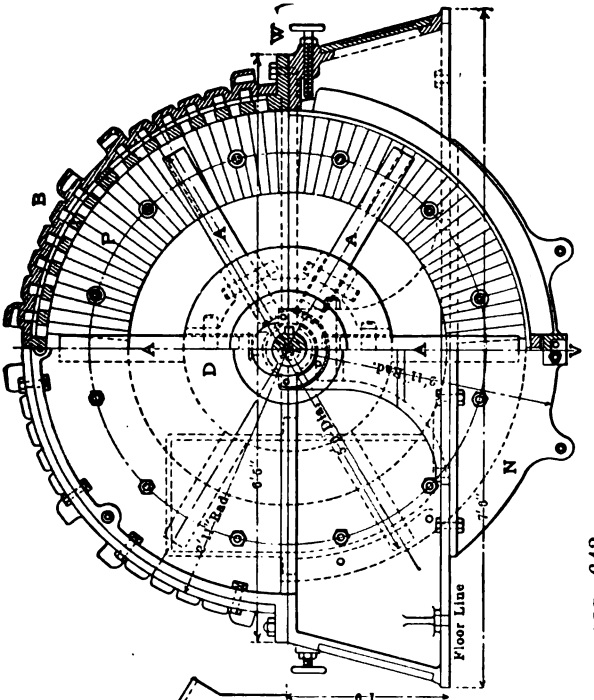

FIG. 643*a*. — SECTIONAL SIDE VIEW OF STROUD DISINTEGRATOR.

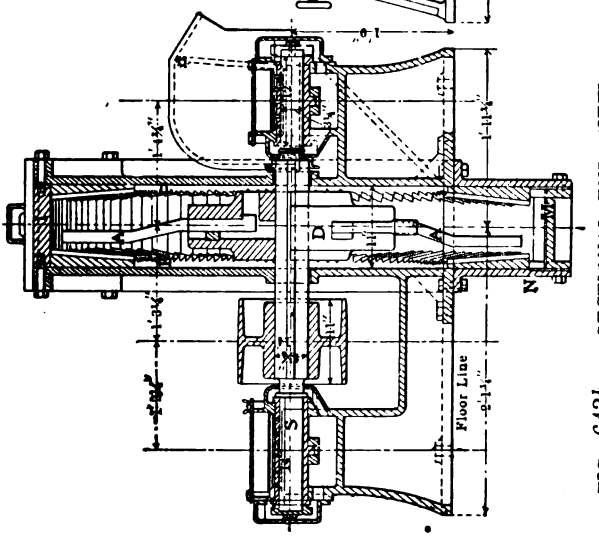

FIG. 643*b*. — SECTIONAL END VIEW.

feldspar, and to shred materials like bark and asbestos. The machine will shred, disintegrate, or pulverize, according to its adjustment and the kind of material being treated. Its essential features are shown in Figs. 643*a* and *b*.

From 4 to 8 beater arms *A* are keyed to the drum *D*, which is driven by the shaft *S*, at speeds varying from 1200 to 4000 revolutions per minute. Side plates *P* are bolted to the sides of the casing, and these plates have a sharp chisel edge inclined opposite to the direction of motion of the beater arms, like a greatly exaggerated single-cut file. In the upper half of the casing transverse impinging bars *I* are placed, and these bars are backed by rubber buffers *B*. The lower half of the casing is lined about its periphery by the transverse bars *M*, which form a screen. These bars are held in position by the side pieces *N*, and the distance between the screen bars may be varied by changing pieces *N*. The screen as a whole is held in place at the top by the screw *W*, and below by the shoulder *V*. The dry feed enters the lower half of the machine. The rapid rotation of the beater-arms, combined with the abrasive action of the lining and the attrition of the particles, reduces the material fed; and, when pulverized, it passes outward through the screen. The screen bars may be set close together as $\frac{1}{64}$ inch. When it is desired to pulverize to very high degrees of fineness, an air blast is employed to remove the crushed material. Under these circumstances materials containing as high as 15% of moisture have been satisfactorily treated; for the large volume of air absorbs nearly 10% of moisture. Previous drying, however, increases the capacity of the machine, whether air or screens are used to remove the crushed material.

The Stroud mill is made in a number of different sizes termed "Classes" by the makers. Some of the machines discharge the crushed product through screens as described above, and in some cases the finely crushed material is sucked out by air. The latter mills are known as the Stroud air separation mills. Details as to the capacities obtainable on different materials, size of feed, size of crushed product, horse-power, etc., will be found in Tables 463 and 464.

TABLE 463. — DETAILS STROUD SCREEN SEPARATION MILLS. "CYCLONE DISINTEGRATORS."

Material.	Mesh Finished Product 60–75 Percent Through.	Size of Mill, Output Pounds per Hour, and Size Fed.				
		Class 0. 6–8 Horse-power. Feed ¼-inch. Pounds per Hour.	Class I. 12–18 Horse-power. Feed 1-inch. Pounds per Hour.	Class II. 20–25 Horse-power. Feed 1½-inch. Pounds per Hour.	Class III. 30–35 Horse-power. Feed 2-inch. Pounds per Hour.	Class V. 40–45 Horse-power. Feed 2½-inch. Pounds per Hour.
Asbestos	To fiber	.....	.....	400– 5,000	600– 7,500	.....
Natural cement	50	2,500–3,500	7,500–10,000	15,000–25,000	25,000–40,000	50,000–75,000
Coal	100	1,500–2,500	4,000– 7,500	8,000–15,000	15,000–25,000	.....
Feldspar	140	500– 750	1,500– 2,500	3,000– 5,000	.....	.....
Mica	60 to 200	100– 200	300– 400	.....	.....	.....
Phosphate rock	60	2,500–4,000	8,000–12,000	15,000–25,000	25,000–35,000	50,000–75,000
Shale	100	1,500–2,500	4,000– 7,500	8,000–15,000	15,000–30,000	.....
Talc	1,000	1,000–2,000	3,000– 6,000	6,000–12,000	10,000–15,000	.....

TABLE 464. — DETAILS STROUD AIR SEPARATION MILLS. "CYCLONE PULVERIZERS."

Material.	Mesh of Finished Product direct from Pulverizer.	Size of Mill, Output Pounds per Hour, Size of Feed.			
		Class 0. 8–10 Horse-power. Feed ½-Inch. Pounds per Hour.	Class I. 15–20 Horse-power. Feed 1-Inch. Pounds per Hour.	Class II. 25–30 Horse-power. Feed 1-Inch. Pounds per Hour.	Class III. 40–45 Horse-power. Feed 2-Inch. Pounds per Hour.
Chalk	60	250–350	750–1,000	1,500–2,000	3,000–4,000
Iron oxides	140	200–400	600–1,200	1,200–2,500	.....
Infusorial earth	200	150–350	375–1,000	750–2,000	.....
Litharge	200	300–750	1,000–2,000	2,000–4,000	4,000–8,000
Ochres	200	50–100	150– 300	300– 600	.....
Red lead	200	300–750	1,000–2,000	2,000–4,000	4,000–8,000
Soda bi-carbonate	160	350–500	1,000–1,500	2,000–3,000	.....
Sulphur	200	100–200	300– 500	600–1,000	.....
Talc	200	150–200	400– 600	800–1,200	.....

§ 1063. THE JEFFREY SWING HAMMER PULVERIZER AND SHREDDER, manufactured by the Jeffrey Manufacturing Company,[34] depends upon impact to effect the reduction of various grades of material. It is successfully used to crush or pulverize substances of hardness from that of bones to that of granite; and to shred bark and asbestos. Its essential features, when intended for crushing or pulverizing, are shown in Fig. 644*a* and Fig. 644*b*. The beater

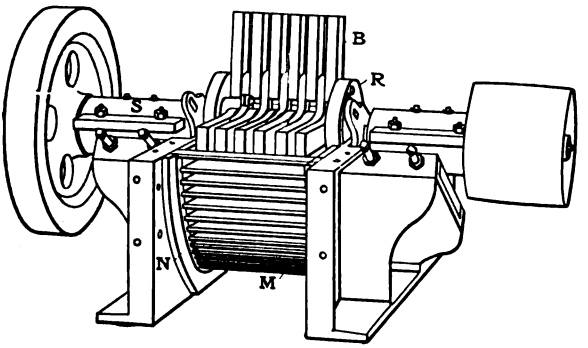

FIG. 644*a*. — JEFFREY SWING HAMMER PULVERIZER. HOUSING REMOVED.

arms *B* are hinged by the steel rod *R*, which has a head at one end and a collar and cotter at the other, to the spider *D* driven by the shaft *S*, revolving at speeds varying from 700 to 1500 revolutions per minute. The screen bars are seen at *M* and are held in position by the spacing racks *N*. These racks may be removed and changed to vary the distance between the screen bars. A cast-iron screen is used when crushing hard rock, in which the openings are arranged at such an angle that the material being treated is constantly deflected to the center of the screen. The dry feed enters the machine at the top, at such a point that it is struck downwards by the beater arms as it enters, and none of it is ejected except through the screen below. When an extreme degree of fineness is desired, the screen is replaced by cast-iron plates, and the pulverized material is blown out of the mill by an air blast, the machine itself acting as the blower. This mill is giving satisfaction for reducing bituminous rock, coal, graphite, limestone, shells, and bark. Table 465 gives details as to the capacities, horse-power, etc.

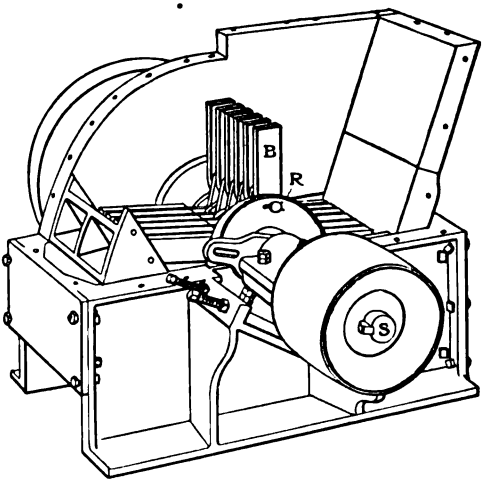

FIG. 644*b*. — JEFFREY SWING HAMMER CRUSHER.

TABLE 465. — SIZES, CAPACITIES, ETC., OF JEFFREY HINGED HAMMER CRUSHER.

Size.		Materials.	Tons Hourly Capacity.	Screen Opening.	Horse-power.	Mesh Finished.
Spider.	Arms.					
18 in.	9 in.	Soft bricks	¼	¼ in.	6	40% through 24
30 "	15 "	Hard bricks	3	¼ "	25	50% " 16
42 "	36 "	Vitrified bricks	12	¼ "	80	50% " 16
18 "	9 ft.	Dry bones	¼	⅛ "	6	75% " 20
36 "	30 in.	Culm	50	1 "	80	through ¼ in.
42 "	48 "	Bituminous coal	100	1 "	100	through ¼ in.

§ 1064. THE WILLIAMS HINGED HAMMER PULVERIZER, made by the Williams Patent Crusher Company,[58] is built in various forms, each designed for the special kind of work required of it. These pulverizers and breakers are used for coke, coal, cement-rock and clinker, slag, limestone, shales, marl, clay, fine clay, phosphate rock, barytes, gypsum, mica, and many other mineral substances. The machine is constructed upon the well-known hinged hammer principle, with parts so simple that it can easily be repaired by any blacksmith. The machine has found an extended use in many places and has evidently given satisfaction. The process used in Portland cement plants is to crush the limestone and the shale to about 1½ or 1-inch size. This product is then run through a mechanical drier and dried as thoroughly as possible. The material is then elevated into storage bins whence it passes to the Williams grinder. This reduces the limestone and shale to 20 mesh and finer, a sizing test showing 95% through 20 mesh, 60% through 50 mesh, and 40% through 100 mesh. This material goes to tube mills where it is finished to 95% or 98% on 100 mesh, after which it is calcined and goes through a similar process of grinding. The machine used for cement grinding has a capacity of 8 to 12 tons of raw material per hour, with approximately 40 horse-power and cost of maintenance of ⅛ to ½ cents per ton of material ground.

BIBLIOGRAPHY OF GRINDERS OTHER THAN GRAVITY STAMPS.

1. Abbé Engineering Company, 218–220 Broadway, New York. Catalogue containing data concerning Abbé spiral feed and discharge tube mills.
2. *Ibid.* Private communication giving data as to costs in case of several installations.
3. Allen, Robert. West Australia Metallurgical Practice. Kalgoorlie (1906), pp. 12, 32, 44, 70, 95, 114, 128, and 162.
4. Allis-Chalmers Company, Milwaukee, Wisconsin. Catalogue of Gates tube and ball mills.
5. Alsing Company, J. R., 136 Liberty St., New York. Catalogue of tube mills.
6. *Ibid.* Private communication giving details as to capacity of tube mills, method of driving, etc.
7. *Am. Inst. Min. Eng.*, Vol. XXXVI. (1906), p. 658. Frederick C. Brown. Article on the importance of fine grinding in the treatment of gold ores.
8. Boss, M. P., San Francisco, California. Private communication with reference to Boss Huntington mill with overflow discharge.
9. Braun, F. W., Company, 501–505 North Main St., Los Angeles, California. Catalogue of sample grinders.
10. *Ibid.* Private communication with reference to wearing parts, power required, etc.
11. Caetani, G., San Francisco, California. Private communication concerning various mills.
12. Caldecott, W. A. Private communication.
13. Chase, Charles, Denver, Colorado. Private communication giving treatment costs at the Liberty Bell mine.
14. Colorado Iron Works Company, Denver, Colorado. Catalogue containing description of Colorado Iron Works continuous grinding pan.
15. Davis, The F. M. Davis Iron Works Company, Denver, Colorado. Catalogue giving data concerning the Ferraris ball mill.
16. Demond, C. D., Anaconda, Montana. Private communication concerning use of Huntington mills in Butte practice.
17. Denver Engineering Works Company, Denver, Colorado. Catalogue describing grinding machinery, tube mills, etc.
18. *Eng. & Min. Jour.*, Vol. LXXVI., (1903), p. 811. W. R. Ingalls. Description of Ferraris ball mill.
19. *Ibid.*, Vol. LXXVIII., (1904), p. 953. M. P. Boss. Short articles relating to the development of the Chili mill.
20. *Ibid.*, Vol. LXXIX., (1905), p. 889. P. Argall. Feeding Tube Mills.
21. *Ibid.*, p. 1089. F. P. Probert. Bryan mills competing with high-speed rolls for crushing jig tailings.
22. *Ibid.*, p. 1224. Sizing tests of Bryan mills.
23. *Ibid.*, Vol. LXXX., (1905), p. 4. H. J. Brooke. Statement is made that ball mills do best work when fed on 2½-inch material.
24. Fairbanks, Morse & Company, Denver, Colorado. Pamphlet descriptive of Elspass mill.
25. Goodale, C. W., Great Falls, Montana. Data with regard to Huntington mills.
26. Hardinge, H. W., 43 Exchange Place, New York City. Private communication with regard to Hardinge tube mill.
27. Harron, Rickard & McCone, San Francisco, California. Private communication giving details concerning their Huntington mills.
28. Hassell Iron Works Company, The, Colorado Springs, Colorado. Circular describing King's bucking board.
29. Humboldt Engineering Works Company, Kalk *near* Cologne, Germany. Bulletin describing ball mills.
30. Hathaway, C. L., Denver, Colorado. Catalogue describing Hathaway gyratory mill.
31. *Inst. Min. & Met.*, Vol. X., (1901–1902), p. 251. P. Argall. Sampling and Dry Crushing in Colorado.
32. *Ibid.*, Vol. XV., (1906), p. 587. Cyril Parsons. Use of Huntington mills in Southern Rhodesia.
33. *Iron Age*, Oct. 4, 1900, p. 9. Description of McKenna laboratory ore grinder.
34. Jeffrey Manufacturing Company, Columbus, Ohio. Catalogue descriptive of Jeffrey Swing Hammer Pulverizer.
35. *Jour. Chem. Met. & Min. Soc.*, of South Africa., Vol. V., (1905), p. 290. H. A. White. Theory of tube mill action.
36. *Ibid.*, Vol. VII., (1906), p. 72. S. H. Pearce and W. A. Caldecott. Paper on the crushing efficiency of tube mills.
37. *Ibid.*, p. 207. S. H. Pearce and W. A. Caldecott. Discussion of their paper.
38. *Ibid.*, p. 289. S. H. Pearce and W. A. Caldecott. Reply to discussion of their paper.
39. Julian and Smart. Cyaniding of Gold and Silver Ores. Edition 2, p. 50.

40. Kent Mill Company, New York. Pamphlet and private communications containing material descriptive of the Kent mill.
41. Lane, C. C., Los Angeles, California. Catalogue describing Lane slow-speed mill.
42. Los Angeles *Mining Review*, Jan. 26, 1907. J. A. Stewart. Account of tests of Lane mill at Bonita Mining Company's property, State of Washington.
43. McCulluck, J. R., Columbia, Nevada. Private communication relating to the use of the Kinkead mill.
44. Merrill, I. J., Portland, Oregon. Pamphlet describing Little Giant quartz mill.
45. *Min. & Sci. Press*, Vol. XCII., (1906), p. 344. Charles Butters. Notes on tube mills at El Oro, Mexico.
46. *Ibid.*, Vol. XCV., (1907), p. 205. C. W. Van Law. Tube mills at Guanajuato.
47. Morse Bros'. Machinery and Supply Company, Denver, Colorado. Catalogue of Wild roller mill.
48. Nevada Engineering Works, Reno, Nevada. Pamphlet descriptive of the Nevada sample grinder.
49. Power and Mining Machinery Company, Cudahy, Wisconsin. Bulletin describing Huntington mill.
50. Sherman, F. W., Salt Lake City, Utah. Private communication.
51. Smidth & Company, F. L., New York City. Catalogue and correspondence giving data on Davidsen tube mills.
52. Stroud & Company, E. H., Chicago, Illinois. Catalogue giving description of the Stroud disintegrator.
53. Sturtevant Mill Company, Boston, Mass. Catalogue 50 and pamphlets relating to grinding machinery.
54. Utah Copper Company, Garfield, Utah. Private communication from D. C. Jackling, with reference to the Garfield Chili mill.
55. Vigeon, E. C., Punta Arenas, Chile, South America. Private communication describing tests made at the mill of the Sociedad Minas de Cobra de Cutter Cove.
56. *Western Chem. & Met.*, Vol. I., (1905), p. 40. A. W. Warwick. Influence of fine grinding on the Metallurgy of the precious metals.
57. Wellman-Seaver-Morgan Company, Cleveland, Ohio. Catalogue relating to grinding machinery.
58. Williams Patent Crusher and Pulverizer Company, St. Louis, Missouri. Catalogue describing Williams' Hinged Hammer Crushers and Pulverizers.
59. Willis, C. F., Cooney, New Mexico. Private communication with regard to Hardinge tube mill.

CHAPTER XXVIII.

LAWS OF CRUSHING.

§ 1065. — In studying the laws governing the crushing of ores, it is necessary to consider the nature of the material crushed, the desired fineness of the crushed product, the causes of the loss of power, the different conditions under which the crushing is effected, and a comparison of the various types of machines.

§ 1066. NATURE OF THE MATERIAL CRUSHED. — The variable amount of energy consumed in crushing is not due entirely to a difference in hardness of the rocks.[5] Lamination, crystallization, and other physical properties may have so pronounced an influence as to be misleading if the hardness of the rock is alone considered. A soft mineral occurring in association with a hard one offers a line of less resistance until the size is reduced so small as to necessitate the comminution of the harder constituent. Thus we may have a case of easy coarse crushing and of difficult fine crushing. The presence of moisture and the temperature of the ore both have their effect upon the resistance offered to crushing.

§ 1067. FINENESS OF THE DESIRED PRODUCT. — The total power required to crush increases as rapidly as the size of the product decreases.[5] At each crushing act more or less comminution is bound to take place. Thus the more times an ore is subjected to the crushing action the greater is the proportion of fine dust. Not only is this fine material usually undesirable for subsequent treatment, but, in producing it, much power is consumed.

§ 1068. SOURCES OF LOST POWER. — E. A. Hersam [5] distinguishes between that part of the work that is necessary and that part which represents lost power. The power consumed in crushing is distributed as follows:

A. In the machinery.
  (1) In transmission to the machine.
    (*a*) Friction in the bearings.
    (*b*) Friction in flexible belts, etc.
    (*c*) Circulation and friction of air at all moving parts.
    (*d*) Forms of energy other than heat; as electricity, sound, etc.
  (2) In the machine and foundations.
    (*a*) Friction in bearings.
    (*b*) Air friction and circulation.
    (*c*) Vibration of foundation.
    (*d*) Forms of energy other than heat; as electricty, sound, etc.

B. Upon the Ore.
  (1) Between the fragments.
    (*a*) Friction resulting in heat.
    (*b*) Sound, light, etc.
  (2) Within the fragments.
    (*a*) Plastic deformation.
    (*b*) Unrecovered elastic deformation.
    (*c*) Rupture.
    (*d*) Production of dust.

The friction of the machines depends upon their construction and the care received. Protection from dust, use of proper lubricants and belting, the align-

ment of shafting, and the care of bearing parts, all have their effect on the loss of power by friction. If these details are properly observed the loss of power need not exceed 10%.

The loss of power among the ore particles is much greater than that due to the friction of the machinery. The force resistant to crushing is simply the cohesion of the mineral, but instead of pulling the fragments asunder, our machines compress them. Thus shearing becomes confused with compression and compression in part becomes tension, until crushing becomes an indefinite action in which only certain resultant forces prevail. For this reason considerable friction is produced which is of two kinds: external friction (among the fragments), and internal friction (molecular). The surface friction among the particles is lessened by a free discharge of the crushed ore as it becomes reduced to the size wanted. In the case of a reciprocating jaw breaker, the loss of power from this cause would be much reduced by having exactly the right amplitude for the quantity of ore between the jaws at any one time and by having sufficient voids between the fragments to provide a place for the crushed particles. The latter is effected by sizing before crushing.

The internal or molecular friction is made evident by the plastic deformation of the ore. Deformation is the adaptation of the ore under stress, without breaking, to new shape. If the ore retains its new shape after the force is removed the ore has undergone plastic deformation; if the ore returns to its former shape it has undergone elastic deformation. Give time enough and it will yield appreciably in any direction. This property of ores is a great consumer of power. Plastic ores will break, however, under suddenly applied force.

In the case of elastic deformation, the energy required to distort the ore is not transformed into heat by internal friction, but is stored to be given back again when the pressure is released. Nevertheless, the return of power may be so delayed or be in such a direction as to produce less effect than if the elastic deformation had not occurred.

§ 1069. CONDITIONS UNDER WHICH CRUSHING IS EFFECTED. — In discussing the behavior of rocks or ores when subjected to crushing under different conditions Courtenay de Kalb [1] has furnished some interesting data which it seems fitting to give in this place. For these tests De Kalb employed a number of different ores, of different degrees of hardness, and made up of different minerals, in order to see whether or not, under like conditions of crushing, these would yield curves showing unlike characteristics as to the quantities remaining on the various sieves. After a number of these curves had been obtained by him he found them to show practically identical characteristics and that he could only obtain curves showing unlike characteristics by varying the conditions of crushing.

In the crushing operation, as De Kalb states, the crushing force can be applied in but three ways: first, by forces acting in opposite directions along a diameter of the particle, Fig. 645*a*; second, by forces acting along radii making an angle with each other, Fig. 645*b*; and third, by forces acting in opposite directions along parallel lines, respectively tangent to the particle at the two extremities of a diameter, Fig. 645*c*. The first method is called diametral crushing. This is exemplified in the stamp mill. The second method is called radial crushing and is exemplified by the rolls and rock breakers. The third method is called shearing. The cone and disc grinders are examples of the latter class.

Among the ores tested by De Kalb the following typical examples have been picked out for the purposes of illustration.

1. A coarsely crystalline syenite, containing mainly orthoclase feldspar, with soda and lime feldspars, finely divided muscovite, and small quantities of basic silicates. Crushed once in a Blake breaker with maximum opening between jaws of 1 inch.

2. True vein material, consisting mainly of crystallized calcite with small quantities of quartz, carrying 14% chalcopyrite. Crushed once in Blake breaker to 1 inch.

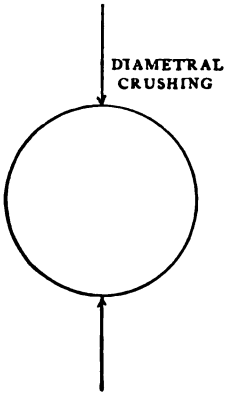

FIG. 645*a*.

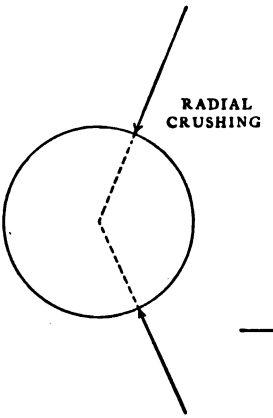

FIG. 645*b*.

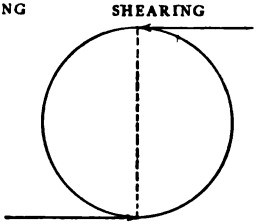

FIG. 645*c*.

3. True vein material, consisting almost wholly of crystalline aggregates of pink dolomite, with 15% of galena. Crushed to 1 inch in a Blake breaker.

4. Vitreous quartz, with a considerable quantity of disseminated pyrite. Crushed in a Blake to 1 inch.

5. Same as 2. Crushed first in a Blake breaker to 1 inch, then in rolls twice to 2.42 mm. and finally in a cone grinder to 20 mesh.

6. Crystalline quartz ore crushed to 30 mesh in stamp mill.

The products obtained by crushing these six different ores in the manner indicated were sized and the cumulative percents obtained will be found plotted in Fig. 646. Table 466 gives the actual values. The cumulative curve has

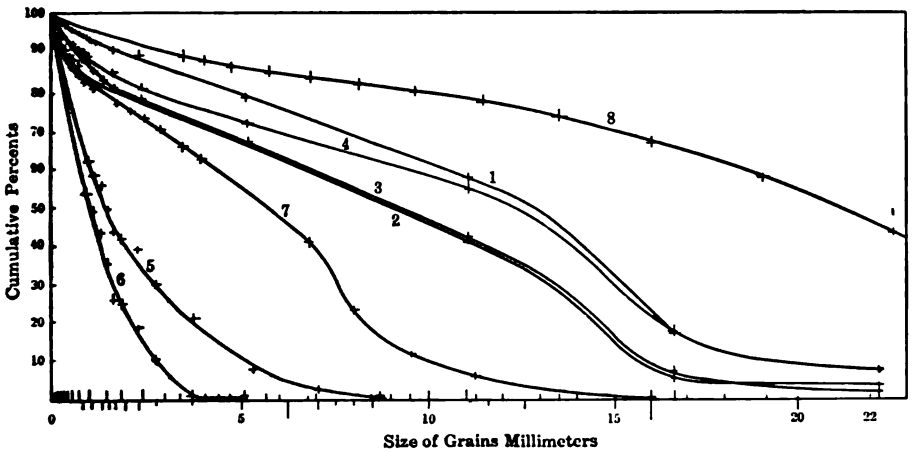

FIG. 646. — GRAPHICAL REPRESENTATION OF TABLES 466, 467, AND 468.

been chosen by the author as it seems to bring out the characteristics of the various curves more clearly than the direct plot given by De Kalb. In the plot the numbers 1–6 inclusive refer to the six different ores mentioned previously, while curves 7 and 8 represent sizing tests upon the products of the fine

and coarse rolls at Mill 162[3]. It will be clearly seen that the characteristic curve obtained by roll crushing does, as De Kalb indicates, resemble that obtained in the case of jaw breakers. Curves 1, 2, 3, 4, 7, and 8 are typical of radial crushing. Curve 5 is typical of shearing and curve 6 is that obtained when stamps are used for crushing. In the case of rolls crushing to say 30 or 40 mesh, or where rolls are choke fed, the characteristic curve tends to approach the curve which is characteristic of stamps and grinders. This is of course due to grinding between the ore particles themselves.

TABLE 466. — SCREEN SIZING TEST ILLUSTRATING SEVERAL DIFFERENT KINDS OF CRUSHING AS GIVEN BY DE KALB.

Diameter of Sieve Openings. mm.	Case 1. Cumulative Percents.	Case 2. Cumulative Percents.	Case 3. Cumulative Percents.	Case 4. Cumulative Percents.	Case 5. Cumulative Percents.	Case 6. Cumulative Percents.
On 22.61	8.50	4.47	2.33	8.40	.....	.....
" 16.62	18.00	7.40	8.08	18.40	.....	.....
" 11.04	59.00	42.20	43.58	55.80	.....	.....
" 5.10	80.00	68.10	67.58	73.80	.....	.....
" 2.42	88.00	78.40	78.83	81.80	.....	.....
" 1.85	90.00	79.60	82.16	84.55	.....	.....
" 1.48	91.00	81.20	83.96	85.57	.....	.....
" 1.06	93.00	83.40	87.29	87.82	.....	.....
" 0.85	93.87	84.80	89.14	89.07	0.99	.....
" 0.708	94.74	86.40	90.59	90.72	2.31	.....
" 0.535	95.61	88.00	92.19	92.22	7.89	0.361
" 0.374	96.61	90.60	94.00	93.97	21.09	2.365
" 0.279	97.11	91.70	94.90	94.72	30.99	11.894
" 0.232	97.61	92.60	95.65	95.27	40.19	19.189
" 0.197	97.71	92.90	95.80	95.77	44.10	24.085
" 0.171	97.83	94.10	96.00	96.17	45.73	25.563
" 0.155	98.33	94.80	96.64	96.67	51.03	36.341
" 0.139	98.43	95.20	96.99	96.87	57.63	44.623
" 0.110	98.61	95.60	97.53	97.52	59.63	49.355
" 0.093	98.86	96.30	98.08	97.92	62.93	53.693
Through 0.093	99.86	99.80	99.88	100.57	99.13	99.961

Tables 467 and 468 give a screen sizing test and assay of the products from the fine and coarse rolls respectively at Mill 162.

TABLE 467. — SIZING ASSAY TEST ON PRODUCT OF FINE ROLLS AT MILL 162.

Size mm.*		Percent of Total Weight.	Cumulative Percent.	Assay Percent Copper.
Through.	On.			
19.0	16.0	0.90	0.90	4.20
16.0	13.5	1.85	2.75	2.55
13.5	11.3	3.45	6.20	1.90
11.3	9.51	6.28	12.48	2.25
9.51	8.00	11.93	24.41	2.00
8.00	6.78	16.72	41.13	2.00
6.78	5.66	7.62	48.75	2.00
5.66	4.76	8.19	56 94	2.00
4.76	4.00	6.32	63.26	2.20
4.00	3.36	3.74	67.00	2.10
3.36	2.83	4.54	71.54	2.05
2.83	2.38	2.87	74.41	1.95
2.38	2.00	1.53	75.94	2.15
2.00	1.68	3.82	79.76	2.15
1.68	1.41	2.17	81.93	2.10
1.41	1.19	1.89	83.82	2.20
1.19	1.00	0.70	84.52	2.20
1.00	0.841	2.01	86.53	2.35
0.841	0.707	0.05	86.58	2.30
0.707	0.595	1.97	88.55	2.50
0.595	0.500	1.08	89.63	2.70
0.500	No. 60 mesh	1.84	91.47	3.00
No. 60 mesh	" 80 "	1.55	93.02	3.10
" 80 "	" 100 "	1.08	94.10	3.55
" 100 "	" 120 "	0.37	94.41	3.80
" 120 "	" 150 "	0.87	95.28	4.40
" 150 "	" 200 "	0.17	95.45	4.30
" 200 "	.....	3.50	98.95	4.60
Loss	.....	1.05	100.00	.....
Total	.....	100.00	.....	.....

* Original material fed was on 38.1 mm.

TABLE 468. — SIZING ASSAY TEST ON PRODUCT OF COARSE ROLLS AT MILL 162.

Size mm.		Percent of Total Weight.	Cumulative Percent.	Assay Percent Copper.
Through.	On.			
.....	38.1	3.29	3.29	7.55
38.1	32.0	5.56	8.85	2.00
32.0	26.9	21.64	30.49	2.80
26.9	22.6	20.10	50.59	2.05
22.6	19.0	20.50	71.09	2.60
19.0	16.0	8.58	79.67	2.60
16.0	13.5	5.45	85.12	3.60
13.5	11.3	2.05	87.17	3.70
11.3	9.51	1.48	88.65	3.10
9.51	8.00	1.14	89.79	3.70
8.00	6.78	1.08	90.87	4.40
6.78	5.66	0.60	91.47	3.90
5.66	4.76	0.68	92.15	3.50
4.76	4.00	0.56	92.71	3.00
4.00	3.36	0.36	93.07	3.00
3.36	2.83	0.48	93.55	3.20
2.83	2.38	0.34	93.89	2.90
2.38	2.00	0.22	94.31	3.00
2.00	1.68	0.56	94.67	3.20
1.68	1.41	0.39	95.06	3.10
1.41	1.19	0.37	95.43	3.30
1.19	1.00	0.17	95.60	3.15
1.00	0.841	0.49	96.09	3.40
0.841	0.707	0.02	96.11	3.45
0.707	0.595	0.49	96.60	3.50
0.595	0.500	0.29	96.89	3.70
0.500	No. 60 mesh	0.49	97.38	4.05
No. 60 mesh	" 80 "	0.54	97.92	4.20
" 80 "	" 100 "	0.28	98.20	4.55
" 100 "	" 120 "	0.10	98.30	4.60
" 120 "	" 150 "	0.27	98.57	5.15
" 150 "	" 200 "	0.13	98.70	5.50
" 200 "	.....	0.90	99.60	5.70
Loss.....	.....	0.40	100.00	.....
Total.....	.....	100.00	.....	.....

From his work De Kalb draws conclusions as follows:

1. There seems to be a typical curve, applicable to ores of whatever nature under like conditions of crushing.

2. There is practically little difference in the effects produced by diametral crushing and shearing.

De Kalb was also able to show that by successively finer crushing, so long as radial crushing is employed, the curve is merely elevated with no tendency to increase the percentage of fines beyond what would naturally result from the circumstance that the entire amount of ore is included within narrower limits of size.

The fact that there seems to be no essential difference as shown by the curves between diametral crushing and shearing is readily explicable when we come to consider the conditions in the stamp battery. As long as the stamp is working on large particles, say ½ inch in diameter and upwards, the crushing is true diametral crushing; when, however, the material is finer than this, the crushing becomes largely a grinding action of particle upon particle, as a consequence of which we might easily expect to get similar results to those obtained by shearing.

§ 1070. De Kalb has supplemented his earlier experiments in ore crushing by a series of experiments for the purpose of throwing further light upon the mechanics of ore crushing in the various typical crushing machines.[6]

The material used in the experiments, from which the following results were obtained, was first spheres of glass, then selected Baltic pebbles, and finally pebbles of granite, syenite, and many varieties of ores.

The crushing effect of rolls was first studied.

The majority of experiments showed that the glass spheres had been rup-

tured into six principal pieces (see Fig. 647). Five of these pieces were large, with irregular fracture planes, and could be refitted so as to re-establish the spheres, which now contained, however, a hollow space, having the form of an elongated ellipsoid, terminating in small round holes at the points of contact with the roll faces. The sixth piece was an elongated fragment, whose length nearly equaled the entire distance between the points of contact of the opposing roll faces with the original sphere. This elongated fragment had come from the hollow space, which, however, it could not completely refill. The remainder of the material originally filling this space had been converted into small fragments and dust. The volume of this interior ellipsoidal cavity, as determined by water displacement, averaged about 10% of the total volume of the sphere, and the volume of the elongated fragment was about 4.5%. Therefore, about 5.5% of the original sphere had been reduced to a relatively fine state of division as the result of a single passage of the sphere through the rolls, or one crushing effect. Exactly similar results were obtained by the use of jaw breakers.

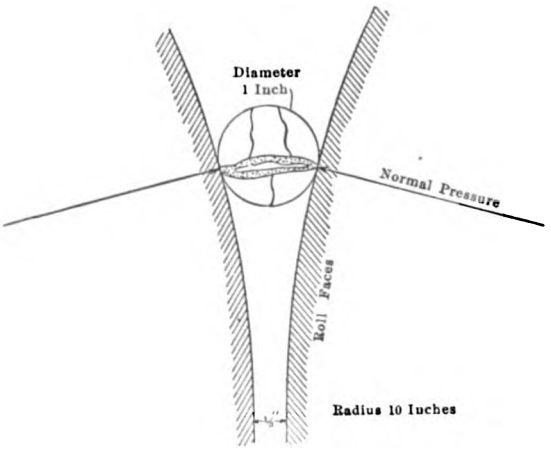

FIG. 647. — CRUSHING EFFECT OF ROLLS.

The results of the experiments in these two instances seem to show that the effect upon a sphere under compression was similar to that of a beam between two compressive forces, and all that portion of the sphere not acting as such a beam was sheared off. The shape of the elongated fragment was approximately that of a figure produced by the lines of distribution of strain within a beam compressed from each end, as was experimentally determined. The larger fragments commonly showed incipient concentric fracture surfaces indicating the transmission of spherical waves of compression, emanating from the points of contact with the rolls.

Very different results were obtained in crushing by stamps. In these experiments ¾-inch steel bars were placed on either side of the 1-inch spheres. The stamps therefore came to rest on the bars and the crushing effect was due solely to impact. The weight of the stamp was 850 pounds and the height of drop to the top of the steel bars was 7½ inches. In all cases the upper portion of the sphere had been irregularly fractured, the lower portion had been reduced to small particles, and in the center, in contact with the die, was found a quantity of finely comminuted material. Evidently the comminution had been due to rupture produced by strains set up by reflected waves of compression meeting oncoming compressive waves.

Further experiments brought out these surprising facts: (1) It was found that materials kiln dried to less than 2% moisture yielded sizing curves which were practically coincident under similar crushing conditions, irrespective of the mineral composition of the material. (2) When reducing ores in the normal way in rolls, intermediate screening out of material finer than 28 mesh (0.9096 millimeter) between successive crushings did not affect the sizing curves of the total resultant product. (3) The quantity of fines produced rapidly increased with the quantity of water of imbibition in the ore up to 7%.

§ 1071. COMPARISON OF THE VARIOUS TYPES OF CRUSHING MACHINES. — By studying the various types of machines it can be plainly seen that that machine must be selected which best satisfies the characteristics of the ore. True crushing devices are well suited to contend with elastic deformation, but are not always best for plastic rocks. Thus jaw breakers gain somewhat by the elasticity, as against the plasticity of ores. Rolls and gyratory breakers recover much of this elastic force. With stamps we find that the rebound due to the elasticity of minerals is lost during the period of rest necessary for the cam, but because of the quick application of the force the plasticity of the ore is overcome. The Huntington and other centrifugal roller mills are also economical in this regard.

Grinders sustain a heavy loss of power as compared to crushers. Thus tube mills, arrastras, and other grinding machines are not well devised to distinguish between the quality of elasticity and plasticity. The tangential motion rubs the surface of the particles and rotates them, abrading the exterior, thus producing dust and wasting power in friction.

§ 1072. RELATIVE EFFICIENCY OF RE-GRINDING MACHINES. — Martin Schwerin[2] gives results of a series of tests on four types of re-grinding machines in the old concentrator of the Anaconda Copper Company at Anaconda, Montana. In published reports of ball mills working a coarse material from a Blake or Gates breaker, and discharging it in a finely comminuted condition, it appears that the machine is well adapted to the work. It is a most efficient screening machine and on this account it is better adapted to a preliminary reduction of ore than for re-grinding particles already reduced to a size approaching that desired in the discharge of the machine. In this latter case it often happens that as much as 50 to 75% of the feed is already smaller than the width of the slot or free aperture of the screen cloth used in the machine. This was the case at Anaconda, where feed was wet jig tailings. The result, in the use of the ball mill, was a rapid screening out of the undersize feed with very little grinding. A finer screen could not be used owing to the necessity for delivering a product suited for jigging. Hence Schwerin concludes that it is absolutely essential that any successful re-grinding machine should be able to work between close size limits.

In Table 469 it is seen that the screening ability of the ball mill and the deterioration in effective crushing increase rapidly with the life of the lining and screens. This is partly due to the enlargement of the holes in the armor plate and partly to the wear of the screens. From a diameter at the small end of the holes in the armor plate of $\frac{5}{16}$ inch they wore in 5 months to $\frac{7}{8}$ inch. This increased size afforded greater facility for the particles of ore to pass through to the outer screen, thereby escaping the action of the balls. The tailings from the jigs handling ball mill product for a period of 10 days, during which they were systematically sampled, averaged 0.925% copper. During the same period the tailings from jigs treating the product from Chili mills averaged 0.505% copper. The feed of both machines averaged about the same in copper values. During the same period the tailings from the first tail sieve of the ball-mill jigs treating the coarsest of four sizes made by the hydraulic classifier assayed 1.3% copper. The trouble lay in the fact that the included grains were not freed. It is thus evident that the ball mill was not suited for use as a re-grind under these conditions. Another serious objection to the ball mill was the fact of its requiring such careful feed regulation when running anywhere near its capacity. When the feed becomes heavier than the machine can handle and continues so for a while, it packs solidly between the screens and the armor plate and it becomes necessary to shut down, remove the outside screens, and revolve the mill until it becomes freed.

The Chili mill, tested by Schwerin, was an original Bradley mill, in which certain improvements had been made at the foundry of the Anaconda Copper Mining Company under the direction of Evans and Waddell. This mill proved to be well adapted for grinding lean tailings and totally unsuited for treating comparatively rich tailings or middlings. The Chili mill has a large capacity and is not sensitive to varying loads. If over or under-loaded it does its work without serious loss of efficiency. The size of the screens is the principal factor in the capacity of the Chili mill and may even be said to control it. Being on the outside, they are perfectly accessible, as they are in the stamp mill, and the condition in which they are kept by the attendant is of great importance if the full duty is to be maintained. The output will be reduced almost in proportion to the number of blinded holes.

Attention is called to the results of the experiment designed to show the variations in the product corresponding to variations in the load. The first column, Table 469, is not important, but it is given to show that there were differences in the assays of the feed. From the table it is seen that as the tons per hour increase, the discharge contains greater percentages of coarse sizes and smaller percentages of fine sizes. This is explained when it is remembered that the greater the quantity of material in the machine the greater is the amount that is dashed against the screens at each revolution. Also, since there can be no accumulation of feed beyond a certain point, soon reached, the greater the amount fed into the machine the shorter is the time a given particle can stay in it.

In the last column are shown the relative amounts of copper in the several sizes. The lower tonnages, accompanied by more perfect grinding, are also characterized by less copper in the coarse size. This column shows how the slimes run up in copper as the burden on the machine diminishes, and how the coarse sizes carry more as the burden increases. The more copper in the coarse sizes, as indicated by the last column, the less favorable is the product for concentration, bearing in mind that the copper particles are very fine and require fine grinding for their release from the gangue particles. The results given are believed to substantiate the statement that the Chili mill is best adapted for the grinding of lean tailings.

The Huntington mill tested was one of the under-driven geared, 5-foot size, and was run at 65 revolutions per minute. The product made is seen to be similar to that of the Chili mill when handling about 6.5 tons per hour. From this it must not be inferred that the results would be so nearly alike on material a great deal richer, such as middlings might be. On the richer feed the Huntington mill results would not change greatly with respect to distribution of copper, while the slime losses occasioned by grinding with the Chili mill would be excessive. On rich material, therefore, the Huntington mill shows to great advantage. The Huntington mill is adapted for wet crushing within close size limits.

A fault of the Huntington mill is the uneven wearing of the roller rings. Instead of wearing evenly to successively smaller concentric circles, they frequently assume polygonal shapes and then pound around the inside of the die ring instead of rolling in continuous contact with it.

The rolls tested were Gates heavy pattern with shells 15 × 36 inches, run at 108 revolutions per minute, giving a peripheral speed of 1,018 feet per minute. The usual arrangement of rolls and trommels was used, in which the feed first passes to an elevator, then to the trommels, the undersize going to jigs and the oversize to the rolls. After passing the rolls the crushed material joins the incoming feed and goes in the elevator to the trommels again.

The most conspicuous feature of the roll product is the small quantity of

slimes present. When the minerals which will make desirable concentrates can be set free by crushing to pass 1.5 mm. or 1.25 mm., there is no machine so well adapted to do the re-grinding as rolls. On such material the recovery of concentrates after roll crushing exceeds the recovery following any other machine.

TABLE 469. — VARIATIONS IN CHILI MILL PRODUCT CORRESPONDING TO VARIATIONS IN LOAD.

Copper Assay of Unsized Sample.	Tons per Hour.	Size.	Weight. Percent.	Copper Assay. Percent.	Distribution of Copper. Percent.
.....	.....	Over 20 mesh	9.3	.96	5.9
.....	.....	" 40 "	32.0	.91	19.6
1.49	2.2	" 80 "	20.0	1.15	15.3
.....	.....	Through 80 "	38.5	2.30	59.4
.....	.....	Over 20 "	7.5	.87	4.7
.....	.....	" 40 "	30.3	.78	17.2
1.37	2.3	" 80 "	22.8	1.00	16.6
.....	.....	Through 80 "	39.4	2.15	61.5
.....	.....	Over 20 "	7.7	.91	5.4
.....	.....	" 40 "	38.8	.86	25.7
1.30	4.0	" 80 "	20.0	1.04	16.0
.....	.....	Through 80 "	33.3	2.08	52.9
.....	.....	Over 20 "	13.5	.75	7.3
.....	.....	" 40 "	37.1	.85	22.7
1.39	5.0	" 80 "	19.1	1.09	14.9
.....	.....	Through 80 "	30.3	2.54	55.1
.....	.....	Over 20 "	18.7	.83	9.0
.....	.....	" 40 "	31.8	.97	18.0
1.71	6.0	" 80 "	19.7	1.74	20.0
.....	.....	Through 80 "	29.7	3.05	53.0
.....	.....	Over 20 "	18.8	.88	10.5
.....	.....	" 40 "	35.7	1.12	25.3
1.58	6.6	" 80 "	19.6	1.52	18.7
.....	.....	Through 80 "	25.9	2.78	45.5
.....	.....	Over 20 "	28.1	.95	18.0
.....	.....	" 40 "	30.2	1.07	21.8
1.48	7.25	" 80 "	16.6	1.40	16.4
.....	.....	Through 80 "	25.0	2.65	43.3
.....	.....	Over 20 "	26.3	.75	13.3
.....	.....	" 40 "	34.8	1.08	25.3
1.48	8.16	" 80 "	19.0	1.66	21.3
.....	.....	Through 80 "	20.0	2.96	40.1
		Huntington Mill Product (average of 6 samples).			
1.48	.....	Over 20 mesh	12.7	.82	7.0
.....	.....	" 40 "	43.5	.92	27.0
.....	.....	" 80 "	17.8	1.52	18.1
.....	.....	" 160 "	10.9	2.07	15.2
.....	.....	Through 160 "	15.0	3.22	32.6
		Krupp Ball Mill Product (average of 5 samples during 1st month).			
1.98	.....	Over 10 mesh	3.4	1.60	2.7
.....	.....	" 20 "	20.3	1.65	16.9
.....	.....	" 40 "	37.6	1.54	29.2
.....	.....	" 80 "	15.3	1.83	14.1
.....	.....	" 160 "	13.5	2.70	18.4
.....	.....	Through 160 "	11.4	3.21	18.4
		Krupp Ball Mill Product (average of 4 samples 6 months' run).			
1.4	.....	Over 10 mesh	23.7	1.41	22.9
.....	.....	" 20 "	31.7	1.35	29.3
.....	.....	" 40 "	29.5	1.28	25.8
.....	.....	" 80 "	5.5	1.52	5.7
.....	.....	" 160 "	4.4	2.16	6.5
.....	.....	Through 160 "	4.4	3.36	10.1
		Gates Roll Product (average of 4 samples).			
.....	.....	Over 10 mesh	14.2	.....	.....
.....	.....	" 20 "	30.2	.....	.....
.....	.....	" 40 "	29.6	.....	.....
.....	.....	" 80 "	12.2	.....	.....
.....	.....	" 160 "	5.8	.....	.....
.....	.....	Through 160 "	7.3	.....	.....

Summary.

	Krupp No. 8 Ball Mill.	Huntington.	Chili.	Gates Rolls.
Capacity in tons per hour	5.0	3.0	6.0	9.0
Screens used mm.	1.5	1.5	1.5	1.5
Speed, revolutions per minute	· 21	65	34	108
Size of machine	Drum 4 ft. 6 in. by 6 ft. diameter.	Die Ring 5 ft. diameter.	Die Ring 6 ft. diameter.	Shells 15 in., face by 36 in. diameter.

The capacity of rolls is also large, but they are unfortunately limited in regard to the fineness of the product which they are able to turn out.

In discussing the crushing efficiency of any machine the method of calculation explained in detail in § 1029, as applied to the tube mill, might be used with advantage.

§ 1073. POWER REQUIRED FOR CRUSHING. — E. A. Hersam [5] has deduced a formula whereby we can calculate the power required to crush ore after having experimentally determined certain characteristics of the ore. He states that the final useful and necessary part of the work of crushing is that of overcoming the force of cohesion of the molecules along the needed lines of fracture. It is against the single quality of hardness that the power must be directed. It is this quality that would exist if elasticity and viscosity could be disregarded. The power expended on hardness does not so much depend upon the principle of the machine as upon the fineness of crushing which represents the effect produced. The real work accomplished in crushing is thus measured by the extent of new surface made. To judge the extent of the surface in a practical way, the crushed product may be sized and the surface estimated as a whole from the sizes of the screen openings and the average diameter of the particles.

In dealing with irregular particles, the theoretical cube is taken as the basis of surface measurements. Where a prevailing shape of the particles is so well known and so constant as to make it safe to allow for this quality, a constant factor, K, may be used which represents the ratio between the surface of a mass of ore, consisting of particles that will pass a given rectangular opening, and the same mass existing in such theoretical cubes as will just pass the same opening. Such a relation gives K a value between 1.2 and 1.7.

If a 1-inch cube is cut into eight ½-inch cubes, and if A represents the work necessary to produce 1 square inch of fracture, then the work done would be represented by $3A$. If K be taken as above described, then $3KA$ represents the work done in breaking each cubic inch of irregular ore from a size that would pass a 1-inch screen to a size that would pass a ½-inch screen. Thus KA, wherever K is constant and known, can be used throughout the discussion in place of A. If n represents the number of pieces produced out of the linear dimension of the original piece, then $(n - 1)$ represents the number of parallel planes in any one direction and $3(n - 1)$ would represent the total number of planes. Therefore $3A(n - 1)$ represents the work of fracturing a 1-inch cube into any number of smaller cubes. Applying this to any cube where D is the diameter of the original cube and d the diameter of the smaller resulting cubes in linear units, n becomes $\frac{D}{d}$. In making one cut through this cube the area of fracture would be D^2 and our formula now becomes, $3AD^2\left(\frac{D}{d} - 1\right)$ equals the work done in fracturing any cube into any number of smaller cubes.

The number of original cubical pieces contained in one cubic inch (whether more or less than one) is $\frac{1}{D^3}$. Thus the work per cubic inch for any size cube reduced to any smaller sized cube is

$$\frac{1}{D^3}\,3AD^2\left(\frac{D}{d}-1\right)$$

or,

$$3A\left(\frac{1}{d}-\frac{1}{D}\right)$$

or for any irregular particle where K is known,

$$3KA\left(\frac{1}{d}-\frac{1}{D}\right)$$

As an application of this formula let us assume a 20-horse-power engine is crushing a certain amount of ore, reducing it from 2-inch size to $\frac{1}{8}$-inch size, and it is required to estimate the horse-power necessary to crush from the same size to $\frac{1}{32}$ inch instead of $\frac{1}{8}$ inch. The value of $3A$ may be taken as constant where the ore is uniform and the crushing appliances equally efficient. Then:

$$20 : x : : 3A(\tfrac{1}{8}-\tfrac{1}{2}) : 3A(\tfrac{1}{32}-\tfrac{1}{2})$$
$$x = 84 \text{ horse-power.}$$

When it is desired to show the power necessary to crush a given weight of ore, the specific gravity, S, of the ore, or the number of cubic inches of solid rock contained in a ton of ore, must be known. As there are 55,320 cubic inches in a ton of substance having a specific gravity of 1, there will be $\frac{55{,}320}{S}$ cubic inches of solid rock in a ton of ore whose specific gravity is S. Thus the work of crushing such an ore would be

$$\frac{55{,}320}{S}\,3A\left(\frac{1}{d}-\frac{1}{D}\right) \text{ foot pounds per ton}$$

or,

$$\frac{\frac{55{,}320}{S}\,3A\left(\frac{1}{d}-\frac{1}{D}\right)}{33{,}000\times 60} \text{ horse-power hours per ton.}$$

or, simplifying still further,

$$A\cdot\frac{0.08382}{S}\left(\frac{1}{d}-\frac{1}{D}\right) = \text{horse-power hours per ton.}$$

It will be noted that in this calculation the primary assumption, namely, that the work required is proportional to the area of fracture, is similar to Rittinger's theory for which see Vol. I., Ore Dressing, page 304. Hersam, however, goes a step further and gives a formula by means of which, knowing approximately from tests the values of certain constants, the actual horse-power required to crush a ton of ore may be closely approximated.

To find this value A it is necessary to crush some of the ore in question, measuring the horse-power hours per ton and carefully sizing the crushed product. This done it is a simple matter to substitute in the formula to obtain A. The value found for A in any case makes a standard of comparison for crushing the ore to any other size or in any other machine, and is a figure that should be equaled or improved in further work upon the same ore, or the reason why this cannot be done should be ascertained. Further details will be found in Hersam's original article.

§ 1074. THEORY OF TUBE MILL ACTION. — If one takes a tube containing a small number of flints or balls[7] (Fig. 648*a*), and commences to revolve it very slowly, the balls or flints rise up the side of the tube until the angle of repose is slightly exceeded, whereupon they begin to roll down the slope. If the motion is very slow the balls roll down "*en masse*," but as the speed is increased the balls gradually spread out, rising higher and higher up the side of the tube, to be finally projected forward as shown in Fig. 648*b*. If, now, the number of balls be increased, as is shown in Fig. 648*c*, the action would be similar to that shown in that figure. At the apex of the mass where the change in direction occurs there is friction and a thickening of the mass due to retardation in motion of the balls about to be hurled forward and the crowding of the oncoming balls. If now the number of balls be increased, the rate of revolution remaining the same, we have something like that shown in Fig. 648*d*. If we suppose these pebbles to be of the same weight and that *A* is 2 feet and *B* 18 inches from the center of rotation we shall find from the formula for centrifugal force $\frac{WV^2}{gr}$ that the relative centrifugal force of the two pebbles is $A = 18$ and $B = 13$. Now as both of these pebbles are situated practically on the same angle of slope, *B* would unquestionably roll down, as its centrifugal force cannot hold it against the force of gravity. *A*, on the other hand, would be projected forward. Thus we have two methods of crushing going on in the tube mill. First, crushing by shock due to the projection of pebbles, and second, crushing by abrasion due to the rolling of the pebbles.

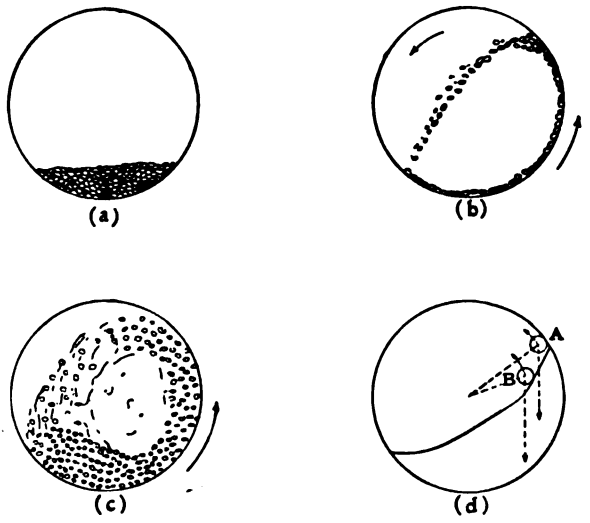

FIG. 648. — DIAGRAMMATIC REPRESENTATION OF TUBE-MILL ACTION.

One form of crushing or the other will predominate according to the type of mill used, the speed of rotation, and other conditions. In dry crushing the pulverizing action seems to be due almost entirely to actual impact of the falling balls, but where the tube is half full of water it is certain that the force of the blows thus struck must be considerably decreased and the grinding action take place largely between the separate balls.

§ 1075. *White's Experiments.* — Without doubt the best work that has been done in formulating a theory of tube mill action is that of H. A. White.[4] Mr. White's work has reference particularly to the speed of rotation of wet grinding tube and ball mills.

An apparatus was constructed consisting essentially of the means of producing circular motion varying from 6 to 400 revolutions per minute, capable of slow and easy adjustment, and a holder capable of taking up to 9-inch tubes or their substitutes. An electric motor connected by belting to a pair of cone pulleys and also stepped pulleys gave the readily adjustable speeds.

For a tube Mr. White found that a block of suitable wood 10 inches square,

with a circular hole of the required diameter cut in it, provided a convenient receptacle when front and back were closed by pieces of ½-inch plate glass. This apparatus gives a section of a small tube mill inside which the action of glass balls, steel balls, lead shot or any suitable material may be studied as the tube is revolved at various speeds. Provision was made by a small hole for adding or withdrawing water. With this apparatus Mr. White performed a long and very complete series of experiments from which he was able to derive many of his valuable conclusions and confirm his mathematical analysis of tube-mill action.

If now we look at Fig. 649 we shall see first a circle representing the section of the tube mill. This circle is not intended to represent the full diameter of the mill, but is the locus of the centers of a series of balls lying on the rim. The series of parabolas represent the path of the balls from the rim and their impact on the tube as the mill is revolved. If the mill is revolved slowly the balls will be carried a less distance up the side of the tube before being projected. The symbol θ is used to denote the angle between the horizontal diameter of the tube mill and the point from which the balls are projected. It is evident that the balls will leave the side of the tube when the radial component of their weight becomes greater than the centrifugal force due to the revolution of the mill. The angle θ will therefore be determined by solving the equation $mg \sin \theta = \frac{mv^2}{r}$ when m = mass of the balls, g = gravity, v = velocity, r = distance from center of the mill to the center of the ball, or in this case the radius of the large circle.

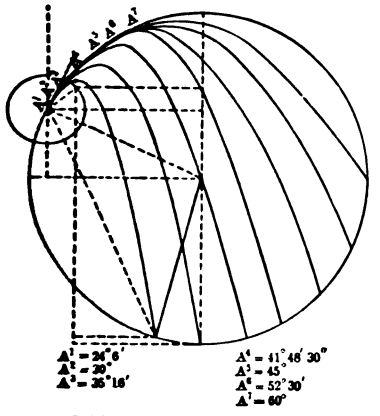

FIG. 649. — PATHS OF MOTION IN TUBE MILL.

From these relations Mr. White has been able by a course of mathematical reasoning to derive very interesting results, for a consideration of which the reader must be referred to the original article.

Fischer [6] gives as the best practical speed $N = \frac{23}{\sqrt{D}}$ to $\frac{28}{\sqrt{D}}$ in meters and Davidsen [7] gives $N = \frac{200}{\sqrt{D}}$ (in inches) whereas White derives a formula $N = \frac{34.22}{\sqrt{D}}$ in meters, which figure, as he says, is more nearly approximated in practice. Fischer states that figures obtained in practice would indicate something like $\frac{32}{\sqrt{D}}$ to $\frac{35}{\sqrt{D}}$. If we consider the case of a 5-foot tube mill the results given by these various formulæ will be as shown in Table 470.

TABLE 470. — COMPARISONS OF VARIOUS FORMULÆ FOR REVOLUTIONS PER MINUTE OF TUBE MILLS AS APPLIED TO STANDARD 5-FOOT MILL.

Fischer.	Davidsen.	White.	Practice.
18.69–22.76 *26.01–28.45	25.86	27.74	28

* From experiment.

Table 471 gives the diameters of tubes and corresponding revolutions per minute for different values of θ as calculated from White's formula. In the actual experiments made it was found that the theoretical number of revolutions had to be exceeded in every case in order to obtain the desired result. For example, an 8½-inch wooden cylinder half filled with coarse sand required 94 revolutions per minute in place of 90.9 to make the first layer continuous. This is due to the balls tending to revolve on their own axes as was carefully demonstrated, and constitutes one of the factors which cause increased wear of the tube-mill lining and lost energy. It is thus clear that a sufficient number of balls must be present or friction between them and the rim will be insufficient and there will be relative slip.

TABLE 471. — TABLE OF DIAMETERS AND REVOLUTIONS.

D Inches.	*D* Meters.	*N* Half Full all Continuous.	*N* $\theta = 90°$.	*N* $\theta = 45°$.	*N* $\theta = 41°0'43''$.	*N* $\theta = 40°$.	*N* $\theta = 35°15'51''$.
1	0.025	297.8	265.0	222.9	214.7	212.5	201.4
2	0.051	210.6	187.4	157.6	151.8	150.3	142.4
3	0.076	171.9	153.0	128.7	124.0	122.7	116.3
.....	0.100	.....	133.6	.....	.....	.....	.....
4	0.102	148.9	132.5	111.4	107.3	106.2	100.7
5	0.127	133.2	118.5	99.68	96.02	95.03	90.07
6	0.152	121.6	108.2	90.99	87.65	86.75	82.22
7	0.178	112.6	100.2	84.24	81.15	80.32	76.12
.....	0.200	.....	94.46	.....	.....	.....	.....
8	0.203	105.3	93.71	78.80	75.91	75.13	71.20
8½	0.216	102.1	90.91	76.44	73.64	72.89	69.08
9	0.229	99.27	88.35	74.29	71.57	70.83	67.13
.....	0.300	.....	77.12	.....	.....	.....	.....
12	0.305	85.96	76.51	64.34	61.98	61.34	58.14
15	0.381	76.89	68.44	57.55	55.44	54.87	52.00
.....	0.400	.....	66.79	.....	.....	.....	.....
18	0.457	70.19	62.47	52.53	50.61	50.09	47.47
.....	0.500	.....	59.74	.....	.....	.....	.....
21	0.533	64.99	57.84	48.64	46.85	46.37	43.95
.....	0.600	.....	54.53	.....	.....	.....	.....
24	0.609	60.80	54.10	45.50	43.83	43.38	41.11
27	0.686	57.31	51.00	42.89	41.32	40.90	38.76
.....	0.700	.....	50.49	.....	.....	.....	.....
30	0.772	54.37	48.39	40.69	39.20	38.80	36.77
.....	0.800	.....	47.23	.....	.....	.....	.....
33	0.838	51.84	46.14	38.80	37.38	36.99	35.06
.....	0.900	.....	44.53	.....	.....	.....	.....
36	0.914	49.63	44.17	37.15	35.79	35.42	33.57
39	0.991	47.69	42.44	35.69	34.38	34.03	32.25
.....	1.000	47.46	42.24	35.52	34.22	33.87	32.10
42	1.077	45.95	40.90	34.39	33.13	32.79	31.07
.....	1.100	.....	40.28	.....	.....	.....	.....
45	1.143	44.39	39.51	33.23	32.00	31.68	30.02
.....	1.200	.....	38.56	.....	.....	.....	.....
48	1.219	42.98	38.25	32.19	30.99	30.67	29.07
51	1.295	41.70	37.11	31.21	30.06	29.76	28.20
.....	1.300	.....	37.05	.....	.....	.....	.....
54	1.382	40.53	36.07	30.33	29.22	28.92	27.41
.....	1.400	.....	35.70	.....	.....	.....	.....
57	1.448	39.45	35.11	29.52	28.44	28.15	26.68
.....	1.500	.....	34.49	.....	.....	.....	.....
60	1.524	38.45	34.22	28.77	27.72	27.43	26.00
.....	1.600	.....	33.39	.....	.....	.....	.....
63	1.600	37.52	33.39	28.08	27.05	26.77	25.37
66	1.686	36.66	32.63	27.43	26.43	26.16	24.79
.....	1.700	.....	32.40	.....	.....	.....	.....
69	1.753	35.85	31.91	26.83	25.85	25.58	24.25
.....	1.800	.....	31.49	.....	.....	.....	.....
72	1.829	35.09	31.23	26.27	25.30	25.04	23.73
.....	2.000	.....	29.87	.....	.....	.....	.....
84	2.134	32.49	28.82	24.32	23.43	23.19	21.97
.....	2.200	.....	28.48	.....	.....	.....	.....
96	2.438	30.39	27.05	22.75	21.91	21.69	20.55
.....	2.500	.....	26.71	.....	.....	.....	.....
108	2.743	28.65	25.50	21.45	20.66	20.45	19.38
.....	3.000	.....	21.39	.....	.....	.....	.....

NOTE. — D = Diameter inside linings of mill, less the average diameter of the balls.
N = Number of revolutions per minute.
θ = Angle of departure of the balls.

Another fault of an insufficient number of balls was observed in the very uneven falling caused by the interchange of balls among the several layers when the circle was less than one-quarter full. Of course these effects were all much exaggerated by the small size of the model.

When water was used alone it was noted that 350 revolutions per minute were required to make 2.2 inches of water in an 8½-inch circle continuous, and it fell again on reducing the number of revolutions to 217. A greater amount of water could not be made continuous at 400 revolutions, nor could any amount of mercury be made continuous at this speed. Ninety-two revolutions would have been sufficient in the absence of slip.

In using water in conjunction with glass beads very little lifting of water was observed on the ascending side, and it thus seems probable that in practice the level of water throughout the mill would be very nearly that of the overflow. In a 5-foot mill this means then that about half the fall would be through water. A ball falling through 2 feet of water from 2 feet above it would be robbed of most of its pulverizing force, which fact brings us to the possible improvements suggested both by theory and experimental data. A very important question is that of linings, and those at present in use seem to require excessive repairs.

In fact, a duplication of mills seems indicated in the absence of more efficient linings. White offers Fig. 650 as a suggestion. Here the outer layer of balls is made continuous and thus forms a sort of automatic lining, the speed being regulated in accordance with this.

Naturally a steel liner would be used behind the balls, but this would receive far less wear and require removal at longer intervals. It has also been shown that a fairly efficient fall would be obtained if the tube were filled two-thirds full of balls when at rest. Of course, while relying on fall for our crushing power, it is obvious that in all cases it cannot pay to waste energy in splashing water, and the outlet must be so arranged that the depth of water does not much exceed the depth of balls on the bottom of the tube mill.

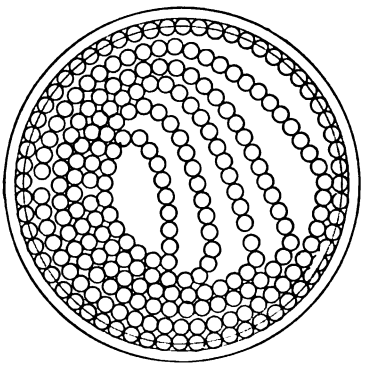

FIG. 650. — INTERIOR OF TUBE MILL. OUTER LAYER OF BALLS CONTINUOUS.

It does not seem quite certain in wet crushing work that the grinding effect between the rolling balls is not after all of greater importance than the actual impact of the balls when the fineness of the material and the floating power of the water is borne in mind.

If practical experience determines this to be the case it will only be necessary to drive the mill at such a rate as will cause the angle of fall of the outer layer to be less than the angle of repose of the balls in water, which may be somewhere about 30°. In this case the tube might be somewhat less than half full, and the outlet could be arranged through a hollow trunnion as is frequently done. An advantage would be a decrease of wasted energy in lifting balls worn down below a useful size, which seems difficult to obviate at present.

The question of best diameter and length of tube mill, and size of balls, is one to be determined on a working scale. Mr. White points out that the practical method of determining the best speed at which to run any tube mill, fitted up for working, would be by indicator diagrams or measurements of current, to determine when the power absorbed divided by the number of revolutions per minute becomes a maximum.

With reference to efficient linings of the sort suggested by Fig. 650, the author calls attention to the so-called El Oro lining shown in Fig. 624, which seems in a measure to carry out Mr. White's idea, reaching the result, however, by a totally different method.

In discussing Mr. White's results, S. H. Pearce says, that with regard to the number of revolutions per minute for a 5-foot mill given by Mr. White as 27.7, the manufacturers supplying the 5-foot mill at present in operation at the Glen Deep, advised 28 revolutions per minute, thereby agreeing with the theoretical speed; furthermore he states with regard to too much water being deleterious to good working that they had found it to be the best practice to exclude as much water as possible from the feed to the mill. As to the manner in which crushing takes place, Pearce states that most people cannot make up their minds what proportion of the material is ground by rubbing between the pebbles and what proportion is affected by the falling blow of the pebbles themselves. At the Glen Deep a great deal of difference was noticed in the sound of a tube mill when started up with a new manganese-steel lining, there being an absence of the rumbling sound previously noticed. There was a tendency for the pebbles to wear flat and the crushing efficiency of the mill dropped considerably. After being run for some time the rumbling began and the crushing efficiency immediately increased. This must have been due to the pebbles slipping on the smooth lining when the mill was first started, while later, after it had acquired a roughened lining, the pebbles began to be raised a little higher before falling.

Bibliography of Laws of Crushing.

1. *Am. Inst. Min. Eng. Transactions*, Vol. XXVIII., (1898), p. 468. Courtenay De Kalb. Graphic records of the Screening of Crushed Materials.
2. *Eng. & Min. Jour.*, Vol. LXXVII., (1904), p. 403. Martin Schwerin. Notes on some re-grinding machines.
3. Goodale, C. W., Great Falls, Montana. Private communication.
4. *Jour. Chem. Met. & Min. Soc.* of South Africa, Vol. V., (1905), p. 290. H. A. White. Theory of tube-mill action.
5. *Min. & Sci. Press*, Vol. XCV., (1907), p. 621. E. A. Hersam. Economy of power in crushing ore.
6. *Ibid.*, Vol. XCVI., (1908), p. 155. Courtenay de Kalb. The mechanics of ore crushing.
7. *Western Chemist & Met.*, Vol. I., (1905), p. 40. A. W. Warwick. Influence of fine grinding on the metallurgy of the precious metals.
8. Zeitschrift Des Vereines Deutscher Ingenieure. March 26, 1904. Herman Fischer. The mode of operation in Ball mills and especially in tube mills.

CHAPTER XXIX.

PRELIMINARY WASHERS.

§ 1076. The principal devices used in preliminary washing of ores, as trough washers, log washers, wash trommels, washing pans, and hydraulic giants have been described in Vol. I., pages 319 to 335. Machines of this class find an extensive use in the washing of iron ores, phosphate rock, and various other materials. Their work consists in disintegrating and floating clay and fine stuff, separating the latter from the coarse material, which can then be further treated if such treatment is needed.

In the United States the use of log washers is on the increase, but the wash trommel, a device that finds much use abroad, has not been introduced to any great extent.

In Vol. I. the preliminary washers were divided into three classes:

(*a*) Those using hand tools for stirring; trough washers.

(*b*) Those using some sort of rotating stirrers driven by power; log washers, wash trommels, and washing pans.

(*c*) Those using the force of a water jet; hydraulic giants.

Washers Using Rotating Stirrers.

§ 1077. Wash Trommels. — For the purpose of illustrating the province of this class of machines, a wash trommel, differing in detail from any described in Vol. I. will be described.

The Fried. Krupp Grusonwerk [2] manufactures a wash trommel (shown in Figs. 651*a* and *b*), generally used in combination with sizing trommels. The trommel proper is a sheet steel cylinder whose dimensions depend on the quantity of the material to be treated. The cylinder is fitted with a system of round iron rakes or with longitudinal angle-irons carrying inclined bevel edges, according to the nature of the material. The material is fed in at *A* through a central opening. The muddy pulp is discharged through screens at the feeding end of the drum, while the washed material is transported toward the opposite end by the rakes or angle-irons and discharged by means of shovel-shaped plates at *B*. For very clayey ores, the washing trommel has a knife shaft in the center which rotates in a reverse direction to the trommel and is separately driven. The sides, ends, and discharges are lined with wearing plates which can be replaced when worn out.

§ 1078. The Turbo Log Washer. — The Turbo used at Mill 154 [3] is shown in Fig. 652. The Turbo is a long double log washer with provision for keeping the fine material thoroughly agitated and promoting washing. The box is 18 feet long and is set at a slope of 1 inch to the foot. The two logs are made of steel sections with the arms bolted on, and revolve in opposite directions. The bottom of the box is of metal and perforated by a number of $\frac{1}{16}$-inch holes. Underneath this bottom is a compartment into which water is led from a main pipe through a series of separate pipes, as shown. Water is thus forced up

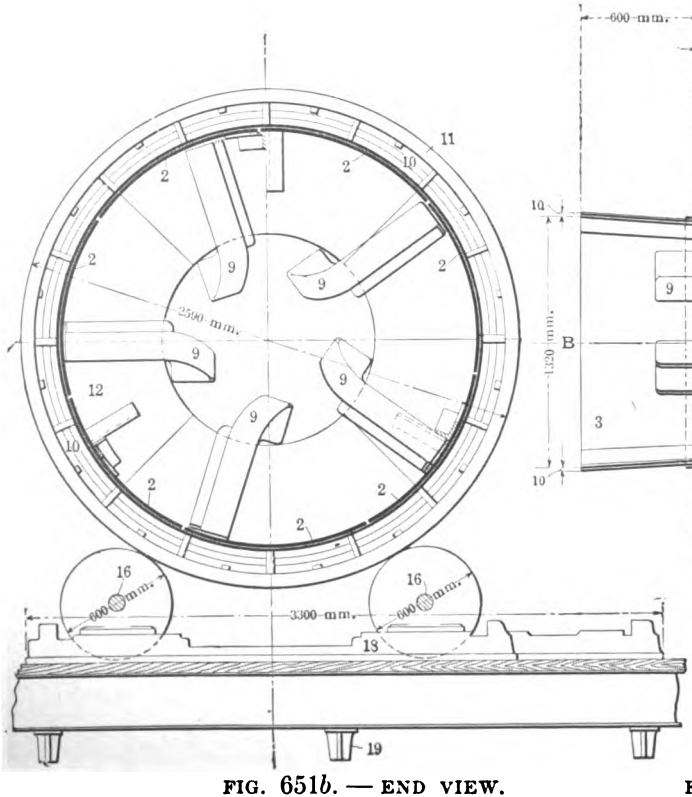

FIG. 651*b*. — END VIEW.

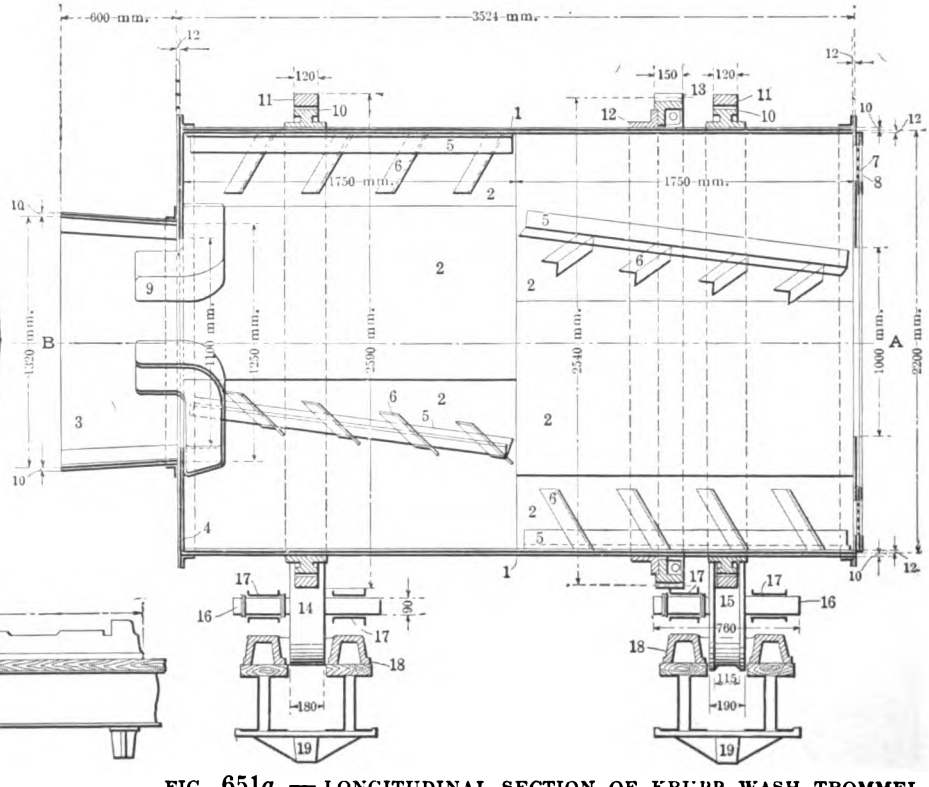

FIG. 651*a*. — LONGITUDINAL SECTION OF KRUPP WASH TROMMEL.

KEY TO FIGS. 651*a* AND *b*.

1. Trommel shell with a conical discharge at B.
2. Wearing plates for the trommel.
3. " " " " discharge.
4. " " " " end walls.
5. Angle irons for conveying pulp.
6. Angle irons for conveying pulp.
7. End screens.
8. Flat iron rim.
9. Discharge shovels.
10. Segments for the tire.
11. Tires.
12. Segment for the tooth gear.
13. Tooth gear, bipartite.
14. Roller without spur gear.
15. Roller with spur gear.
16. Roller axes.
17. Babbitt-lined journals.
18. Sills.
19. Foundation.

through the bottom of the washer and the fine material is thus kept agitated by a multitude of sorting columns. Each separate pipe leading into the chamber has its separate valve for regulating the water supply throughout the length of the washer. The concentrates from the turbo are discharged at the low end of the machine. These machines are treating iron ore undersize of $\frac{3}{16}$-inch screen and delivering concentrates carrying 60% iron.

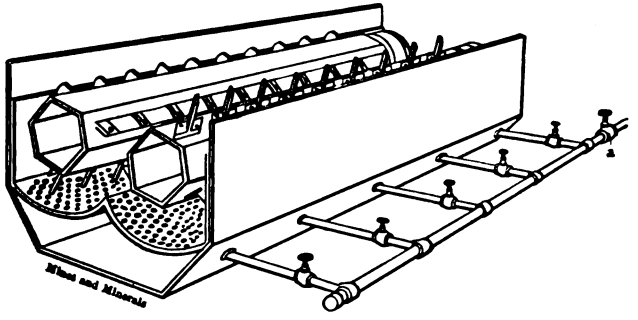

FIG. 652. — THE TURBO LOG WASHER.

§ 1079. THE DORR MECHANICAL CLASSIFIER. — In cyanide mills the Dorr Classifier [1] is coming into quite general use for the separation of leachable sands from slimes (see Fig. 653). The Dorr classifier diminishes the amount of water needed for classification, by raking the heavier grains up an inclined plane against a slight current of water, while the light grains are carried away by the volume of feed water to which the small amount of wash water is added. The principle is the same as that of the log washer; the adaptation, however, is by systematic raking of the sand, instead of propelling it uphill by the screw blades of the log washer.

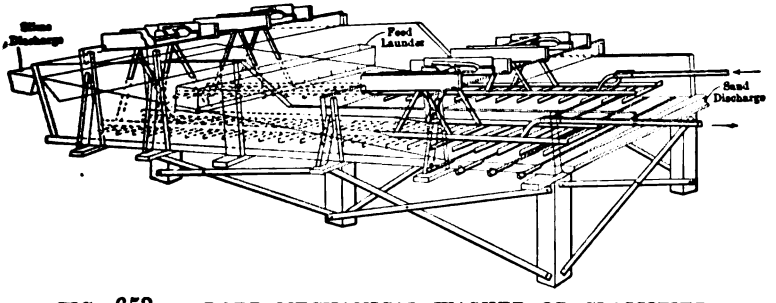

FIG. 653. — DORR MECHANICAL WASHER OR CLASSIFIER.

It consists of a table sloping about 1 inch in 7. On the two sides are boards for holding in the water which covers the lower 6 feet of the table. At the lower end is a tailboard over which the overflow water passes. Near the lower end and running across the table is the feed launder feeding through small holes into the water. There are two sets of rakes operated alternately, each consisting of two longitudinal rods under which are attached 24 transverse rakes. These rakes are supported normally a short distance above the surface of the table and operated by reciprocating cranks. Each set of rakes is suspended near the ends of the rods from transverse axles with rollers at each end. On the forward stroke, when they are raking sand up the slope, these rollers travel on a lower track which keeps the rakes operating on the sand.

At the end of this stroke the rollers ride up to a higher level, lifting a latch which falls behind them and which, in turn, acts as a track for the return stroke, elevating the rakes well above the bank of sand. To complete the operation by washing out the last of the fine stuff on the upper part of the slope which is not covered by water, there are four spray pipes let into the surface of the table, the water from which rinses out the last of the fine grains.

The clean sand is discharged by the upper rake into the launder with a small quantity of water for conveying it away.

At the mill of Lundberg, Dorr, and Wilson at Terry, Black Hills, South Dakota, where the pulp from the stamp mills consisted of 4 tons of alkaline cyanide solution to 1 ton of ore crushed through 20-mesh screen with 60% finer than 100 mesh, the Dorr classifier doubled the leaching rate on the coarse portion and reduced the amount of oversize of 200 mesh in the fine portion from 25 to 5%.

BIBLIOGRAPHY OF PRELIMINARY WASHERS.

1. Dorr, John V. N., Lead, South Dakota. Private communication and pamphlet describing the Dorr Mechanical Classifier.
2. Fried. Krupp Grusonwerk, Magdeburg, Buckau, Germany. Private communication.
3. *Mines and Minerals*, Vol. XXIX., (1908), p. 97. H. H. Stoek. Article describing concentration of Mesabi Iron Ores.

CHAPTER XXX.

SIZING SCREENS.

§ 1080. Screens or sieves have been defined, Vol. I., page 336, as surfaces provided with holes which serve to separate the fine particles that are able to pass through the holes, from the coarse particles that are unable to pass through; the purpose of screens being to divide the ore into a series of sizes for subsequent treatment. The screens to be described in this chapter may be classified as follows:

A. Stationary screens.
   1. Perforated plate and wire cloth screens for medium and fine work.
B. Moving screens.
   1. Shaking screens or riddles.
   2. Revolving screens or trommels.
   3. Belt screens.

Stationary Screens.

§ 1081. Perforated Plate and Wire Cloth Screens for Medium and Fine Work. — The Rowand incline screen in use at Mills 141 and 152 is shown in Fig. 654.

This screen was designed by Lewis G. Rowand [13] and is similar in character to the Edison screen described in Vol. I., page 341. The screens of needle-slot, punched plate are carried in a girder of ¼-inch plate, which inclines 60° with the horizontal, while the screening surface is inclined 40°. The dry ore entering at the top accumulates on and behind the steel wearing plate *P* until it has attained its angle of rest of 45°, when it falls to a second similar plate before finally going over the screen. The oversize passes over similar plates to the next screen. In this manner all the parts are protected from wear except the wearing plates and the screen plates. The dimensions of the parts are shown in the cut.

§ 1082. The Pratt Ore Sizer [9] (see Fig. 655) differs from the usual forms of stationary screens in that the pulp to be sized is fed to the screen through a revolving distributor. The apparatus consists of a conical screen with 60° angle, of plate steel punched with holes 1½ millimeters in diameter. The diameter at the top is 4½ feet. In the middle is a conical diaphragm (1) sloping inwards toward the center hole. The distributor (2), 14 inches deep and 21 inches in diameter, makes 125 revolutions a minute. This distributor has six pipes (3) at different heights and looking different ways, for distributing the sand to the screen. The undersize is rapidly forced through without blinding the sieve, the oversize passes down to the diaphragm (1) and is fed into a lower revolving distributor (4) which distributes the sand to the lower part of the screen. This screen yields from 150 tons feed per 24 hours, 90 tons of oversize, 3 millimeter to 1½ millimeter, and 60 tons undersize, 1½ millimeter to 0. The oversize carries 11½% of fines.

The screen lasts 3 weeks. It is put on in 12 parts, 6 around the upper

portion of the cone and 6 around the lower. This screen is used for screening jig middlings preparatory to Chili mill.

The Pratt Ore Sizer has been used at Mill 164 for a number of years and has given satisfaction.

Riddles and Vibrating Grizzlies.

§ 1083. Riddles are shaking screens with plane surfaces. They may have less slope than fixed plane screens because the motion of the screen is transmitted to the ore, conveying the oversize toward the discharge end. In Vol. I.,

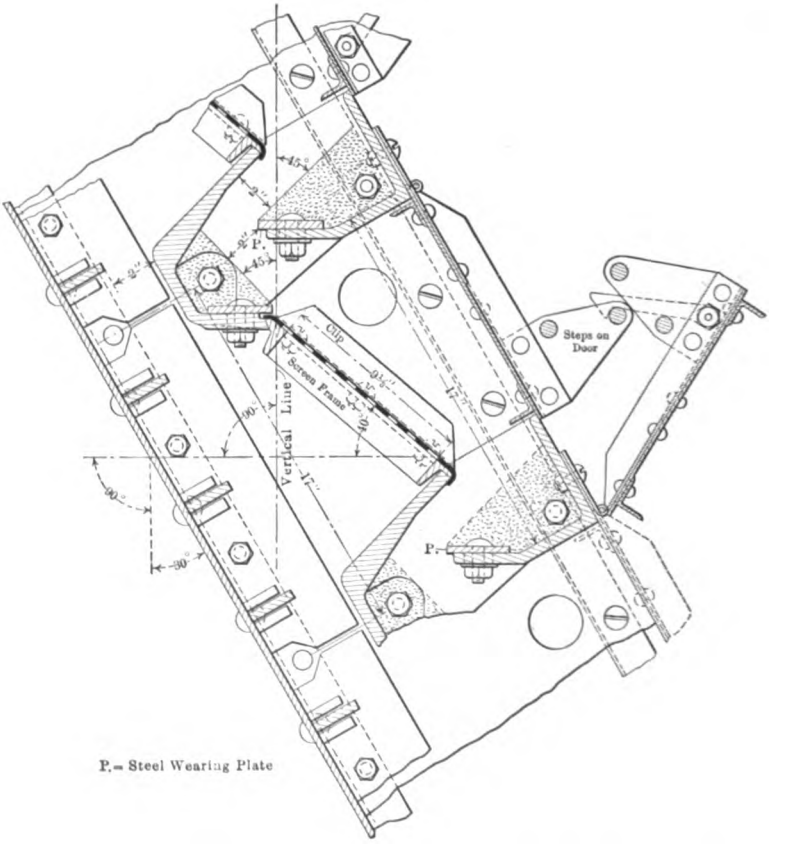

FIG. 654. — LONGITUDINAL SECTION OF ROWAND SCREEN.

riddles have been divided into four groups: (*a*) Shaking screens, which have an endwise or sidewise motion in the plane of the screen, or nearly so, with or without a bump; (*b*) pulsating screens, which have an up and down motion perpendicular, or nearly so, to the plane of the screen; (*c*) gyrating screens with circular or elliptical motion in the plane of the sieve; and (*d*) screens gyrating in a vertical plane parallel to the length of the screen. The screens here to be described are exclusively of the first and second types.

Pulsating screens have been installed in a number of mills, but their use does not seem to be on the increase. They are, as yet, in a probation stage

and it is impossible to say at the present time which of them will win out. A number of different types will be described in the following pages.

§ 1084. THE FERRARIS SHAKING SCREEN (see Fig. 656) has been fully described in Vol. I., page 342. This screen is much used in Sardinia and Mediterranean countries and possesses points of merit which the author wishes especially to emphasize. Some years ago the author employed, for testing purposes, a shaking riddle such as is shown in Fig. 657*a*. This riddle was inclined

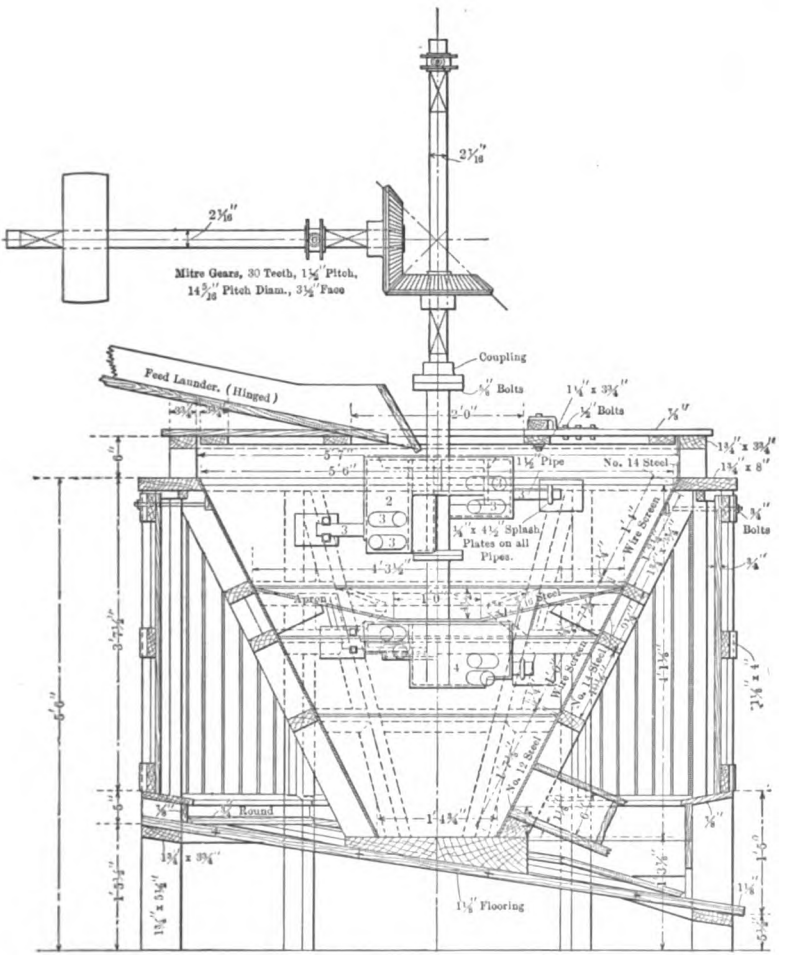

FIG. 655. — SECTION OF PRATT ORE SIZER.

at a small angle and was actuated by an eccentric making 200 revolutions a minute. It was found that the undersize *U*, which passed through the screen into the pan beneath, made a nearly uniform layer, showing that the device was not doing its work properly. The Ferraris principle was applied to the screen with the result shown in Fig. 657*b*. In the latter case the undersize *U*, instead of forming a uniform layer in the pan, took the form shown in the figure. In Mill 137 the Ferraris screen has displaced trommels, saving mill height and giving double the capacity. Fig. 656 has been given to show the method of

support employed. In this cut two screens are shown, the right-hand screen being suspended from above, while the left-hand screen is supported from below.

The author is of the opinion that the Ferraris principle might be more generally applied to the screening of ores and that the simplicity and efficiency obtained would result favorably.

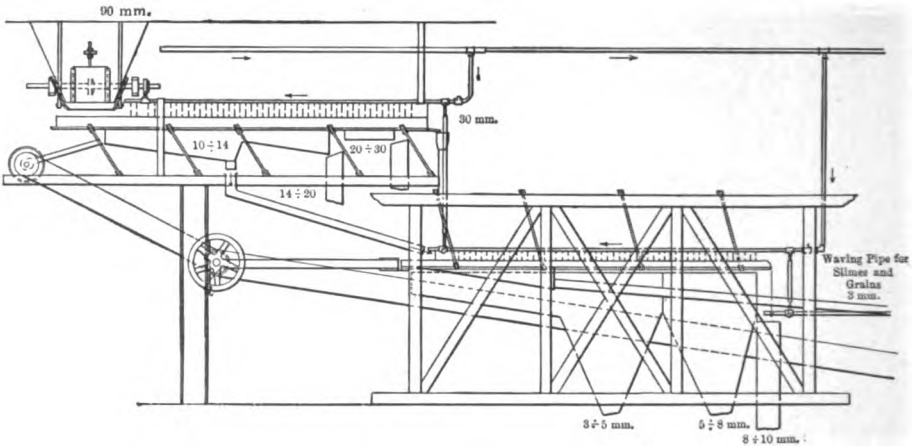

FIG. 656. — FERRARIS SHAKING SCREEN.

§ 1085. PULSATING SCREENS. — *The Imperial screen* [16] (see Figs. 658*a*, *b*, *c*, *d*, and *e*), is made by the John A. Traylor Machine Company.

In Fig. 658*a* the moving screen frame, which is hung by the toggles (7) to the stationary frame not shown, has been lifted by the toggles actuated in

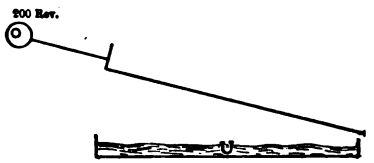

FIG. 657*a*. — SHAKING RIDDLE.

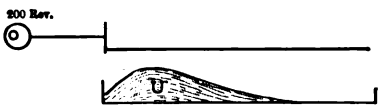

FIG. 657*b*. — SHAKING RIDDLE OPERATING ON FERRARIS PRINCIPLE.

turn by the motion of an eccentric driving the lever (8) and (13), so that the frame is brought sharply against the stops (5), tossing the ore into the air, and freeing the meshes of the screen. Fig. 658*b* shows the eccentric at mid-stroke. The ore at this point is resting on the screen, which is being advanced in the direction of discharge by the cam (1). This cam works against the pressure of a spring (4) which tends to keep the screen frame in contact with the bumper (3). While the ore is being moved forward, the toggles, as shown

in Fig. 658*c*, bring the screen frame up against the stops again, throwing the ore upward from the screen. The inertia of the particles carries them toward the discharge end, while at the same time the cam (1) releases the roller (2), and, as shown in Fig. 658*d*, allows the screen suddenly to be drawn backward by the spring (4). The ore falls again to the screen while it is in this position, which has the effect of further advancing it toward the discharge. The sum

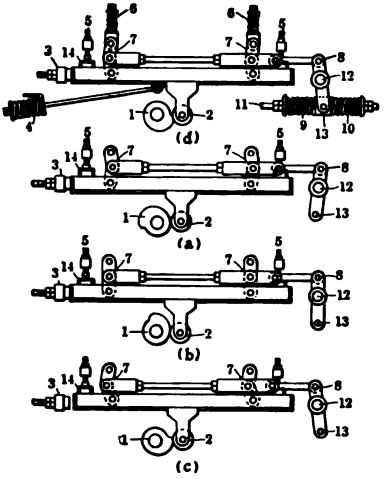

FIG. 658. — MECHANISM OF THE IMPERIAL SCREEN.

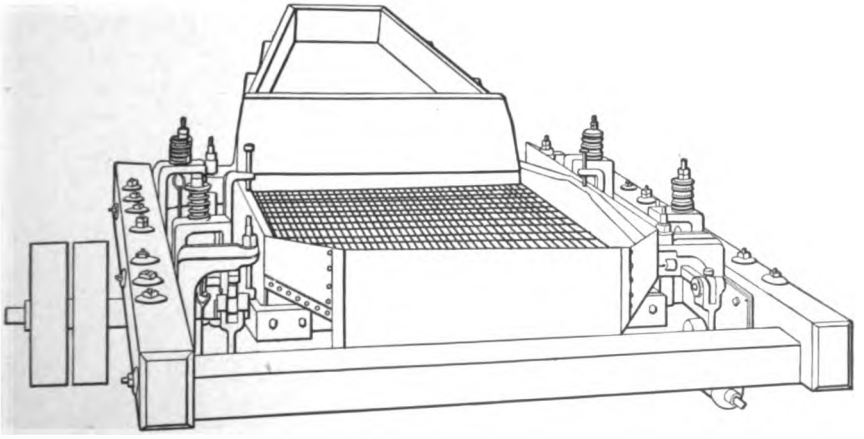

FIG. 658*e*. — THE IMPERIAL ORE SCREEN.

of the two effects moves the ore about ½ inch. The cam runs at 250 revolutions a minute. At each revolution the ore is moved forward, besides being given an extra vertical impact. The screen has an area of 2 × 4 feet, and is inclined at a slight angle so that the ore is sent over the long dimension of the screen. It may be operated wet or dry, and appears to have about the same capacity when run wet as when run dry. Meshes as fine as 150 mesh are now in operation. The weight of the machine is 1,000 pounds.

The capacity of the screen per day of 24 hours on material of various sizes as given by the manufacturers is shown in Table 472.

TABLE 472. — CAPACITIES OF IMPERIAL SCREEN.

Size.	Capacity.
1½ inch	700 tons.
1 "	550 "
½ "	200 "
¼ "	175 "
⅛ "	100 "
10 mesh	80 "
24 "	75 "
30 "	60 "
50 "	30–40 tons.
100 "	25–30 "
150 "	25 tons.

§ 1086. *The Newaygo Separator.*[12] — One of the latest of the so-called vibrating screens is the Newaygo separator (see Fig. 659). This separator is an inclined, vibrating screen, framed in steel and enclosed in steel. It is in-

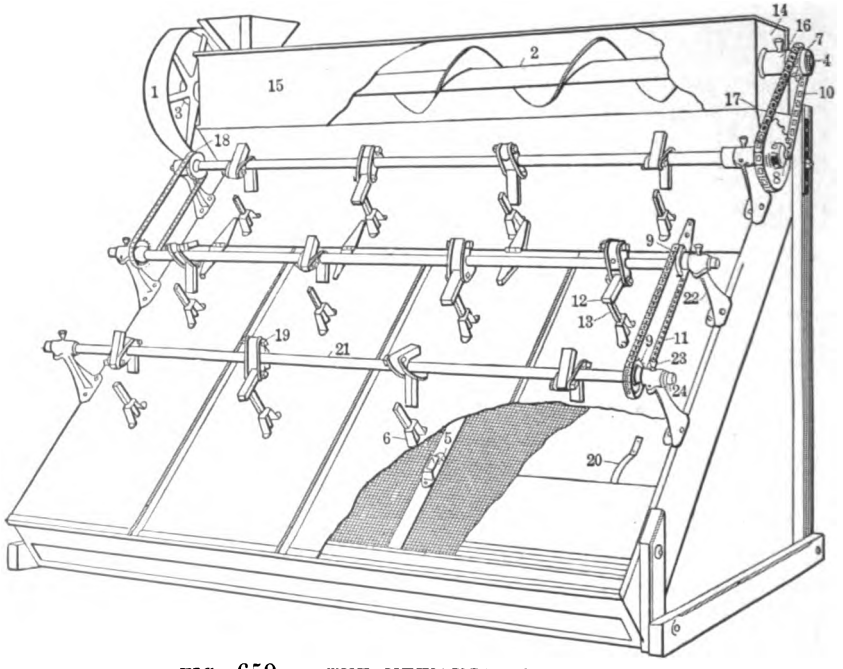

FIG. 659. — THE NEWAYGO SEPARATOR.

KEY TO FIG. 659.

1. Driving pulley.
2. Feed conveyor.
3. Head driving shaft (conveyor).
4. Tail shaft (conveyor).
5. Lower standard guide.
6. Upper standard guide.
7. Small driving sprocket.
8. Intermediate driving sprocket.
9. Hammer shaft sprockets.
10. Number 35 chain.
11. " 25 "
12. Hammers.
13. Hammer posts.
14. Conveyor box end, right hand.
15. " " " left hand.
16. " " " bearing.
17. " " " support, right hand.
18. " " " " left hand.
19. Crank wheels.
20. Flat springs under screen frames.
21. Shafts, each.
22. Shaft standards, split bearing.
23. Oil cups, No. 1.
24. Shaft collars.

tended to size all moderately dry, pulverized materials, and to do this without any shake whatever, substituting vibrations which are not destructive. These vibrations are sharp and cleansing, and give material in process the least possible projection, and offer it innumerable opportunities to pass through the clean screen openings before the oversize escapes at the foot. The Newaygo screen has a capacity of from 5,000 to 40,000 pounds an hour. This large capacity is explained by the fact that every part of the screen surface is vibrating sharply all the time. These vibrations of the tense screen surface are so sharp as to prevent screen openings from clogging, and still are of such slight amplitude that the material is not thrown far, but is just hopped over the screen surface and is offered ample opportunities to escape through it.

The material to be screened is fed into the hopper, from which it is taken by a screw conveyor (2), and distributed in a continuous thin stream over the entire cross-surface of the screen. The screen cloth is automatically kept in tension and vibrated by the small hammers (12) constantly tapping the protected screen cloth which, as just stated, is kept in strong tension.

The adjustments are confined to changing the screen incline by moving the position of the supporting legs. This changes the fineness and increases or diminishes the output as required. The separator is complete in itself, compact, driven by a single pulley, and ready to start when the belt is applied. The screens are quickly removable and can be replaced through a door at the top of the machine or through the hinged front cover. Table 473 gives the approximate capacities, etc., obtained with these separators.

A considerable number of these machines are in use and giving perfect satisfaction.

TABLE 473. — APPROXIMATE CAPACITIES OF NEWAYGO SEPARATORS TO VARIOUS DEGREES OF FINENESS.

Cloth Mesh.	Wire Size (Gauge).	Output Approximate Mesh.	Capacity Approximate Pounds per Hour. No. 1 Separator.	Capacity Approximate Pounds per Hour. No. 2 Separator.	Capacity Approximate Pounds per Hour. No. 3 Separator.
3	16	4	21,000	28,000	35,000
6	18	12	16,000	21,000	28,000
8	20	14	14,000	19,000	25,000
12	23	22	13,000	17,000	22,000
14	24	26	12,000	16,000	21,000
16	25	30	11,000	15,000	20,000
18	26	32	10,500	14,000	19,000
20	27	36	9,500	13,000	18,000
22	28	38	9,000	12,000	16,000
24	29	40	8,200	11,000	14,000
26	30	45	7,500	10,000	13,500
28	31	50	6,800	9,000	12,000
30	31	55	6,000	8,000	11,000
35	32	60	5,200	7,000	10,000
40	33	65	3,800	5,000	7,000
45	35	75	2,600	3,500	4,600
50	36	85	2,100	2,800	3,500
55	36	90	1,100	2,200	3,000
60	37	100	1,500	2,000	2,700
70	37	120	1,200	1,600	2,200
80	38	140	1,050	1,400	1,900
100	40	200	750	1,000	1,400

§ 1087. *The "Impact" Screen.* — The "Impact" screen of the Colorado Iron Works Company[4] is shown in Fig. 660. The vibrating screen frame S is flexibly supported by the elliptical carriage spring E. The spring pressure is adjustable, and forces the vibrating frame upward against four cushioned stops. To this vibrating frame motion is imparted by two ratchets R, operating as multiple cams and mounted on the fixed frame F. The cams force the screen down, and the springs bring it back against the stops with a sharp upward

impact. Beneath the screen is a series of pans *P* which serve to retain enough water to keep the meshes open when the machine is used for wet screening. When used for dry screening, a housing is provided.

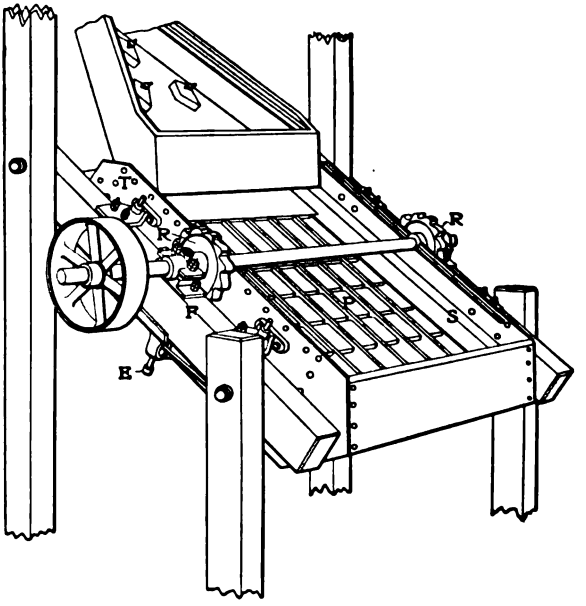

FIG. 660. — THE IMPACT SCREEN.

§ 1088. *The "Vibracone" Separator.* — The "Vibracone" separator manufactured by the Stephens-Adamson Manufacturing Company [16] is essentially a vibrating screen, and is suited for dry screening only. The characteristic features are the seamless steel disc distributor, the cone-shaped screen, and the ratchet vibrating mechanism. Its construction is shown in Fig. 661.

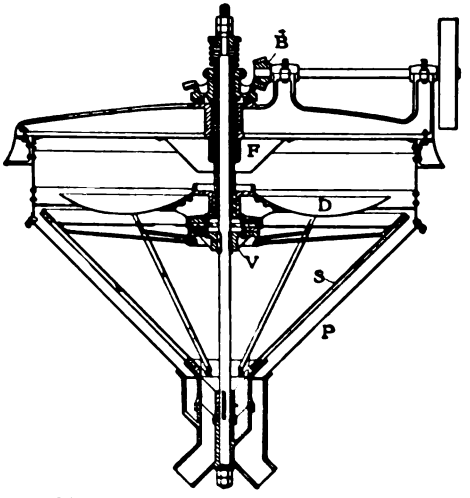

FIG. 661. — SECTION OF THE VIBRACONE SEPARATOR.

The feed enters through the feed hopper *F* and falls upon the feed distributor *D*, which is revolved by means of the vertical shaft at the rate of 33⅓ revolutions a minute. The pulp is thrown from the saucer-shaped distributor and falls over the screen surface *S*. This screen surface is vibrated in a vertical plane by means of the vibrating mechanism at *V*.

§ 1089. *The Traylor Centripact Screen* (see Fig. 662) has a revolving saucer-shaped screening surface *S*. This surface is pulsated in a vertical plane by means of a suitable vibrating mechanism. The feed comes in at *D* and is carried over the screen surface by reason of the centrifugal force due to rotation, the over-

size passing over the end of the screen into *O*, while the undersize is received by the hopper *H*. This device is intended for wet screening; and screening is done under water, the water level being at *W*.

Revolving Screens.

§ 1090. Revolving screens or trommels are too well known to require definition. In Vol. I., revolving screens have been divided into three classes: (*a*) cylinders and prisms, (*b*) cones and pyramids, and (*c*) spirals. Examples of each of these several classes have been described. It will be noted that all of the screens to be described under this heading belong to class (*a*). The important changes to be noted are the increased use of punched plate and the tendency to make the screens in easily replaceable sections.

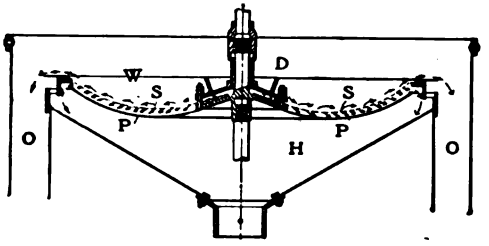

FIG. 662. — SKETCH SHOWING PRINCIPLE OF CENTRIPACT SCREEN.

The King screen which is described under this heading differs widely from the ordinary trommel in several respects. It has, however, been classed among the trommels as it is strictly speaking a revolving screen. The King screen, and the Callow screen to be described under a later heading, have rendered it possible to size material economically by means of screens down to 80 mesh in the case of the King screen, and 150 in the case of the Callow. The probability is that the King screen could be used for screening finer than 80 mesh, but it has not been installed as yet for finer work than 80 mesh.

The ability to carry screening down to such fine sizes efficiently and economically is a very great advantage in many cases where hydraulic classifiers are undesirable. Philip Argall[3] prefers screens of the King or Callow type to hydraulic classifiers for preparing fine pulp for treatment on tables.

§ 1091. Octagonal Revolving Screens.[1] — Among the improved sizing trommels is the octagonal revolving screen shown in Fig. 663. The object of the construction here shown is primarily to facilitate the labor of repairing plates and screen cloth by making the trommel sectional. The whole screening surface is composed of panels which are independently bolted into place. An additional advantage gained is in the agitation of the material being treated. This is especially true of the smaller sizes. Such sectional screens are made both straight and tapering.

§ 1092. Sectional Trommels. — Sectional punched and cast-plate trommels have come into use within recent years. Wire cloth has formerly been the more convenient material on account of its being more easily repaired (see Ore Dressing, Vol. I., page 354). By making the trommel surface in sections this difficulty has been removed.

§ 1093. The "*Revolving Grizzly*" of the Denver Engineering Works Company[6] is shown in Fig. 664. The capacity of this screen is approximately 300 tons in 24 hours. The screening surface is 4 feet in diameter by 11 feet long. All surfaces of the housing and spouts subject to wear are lined with renewable sheet-steel plates. The screen plates are cast manganese steel.

The screen is supported by angle irons on the outside, leaving the inside free of obstruction. All parts of the machine are sectional.

§ 1094. *Gates All Iron Frame Revolving Screen.* — The Gates[1] all iron frame revolving screen (see Fig. 665) has been designed for severe service, where

the material to be screened is too heavy and of too large a size to handle very successfully with the regular trommel having internal shaft and spiders. In the Gates screen there is no internal shaft or spiders.

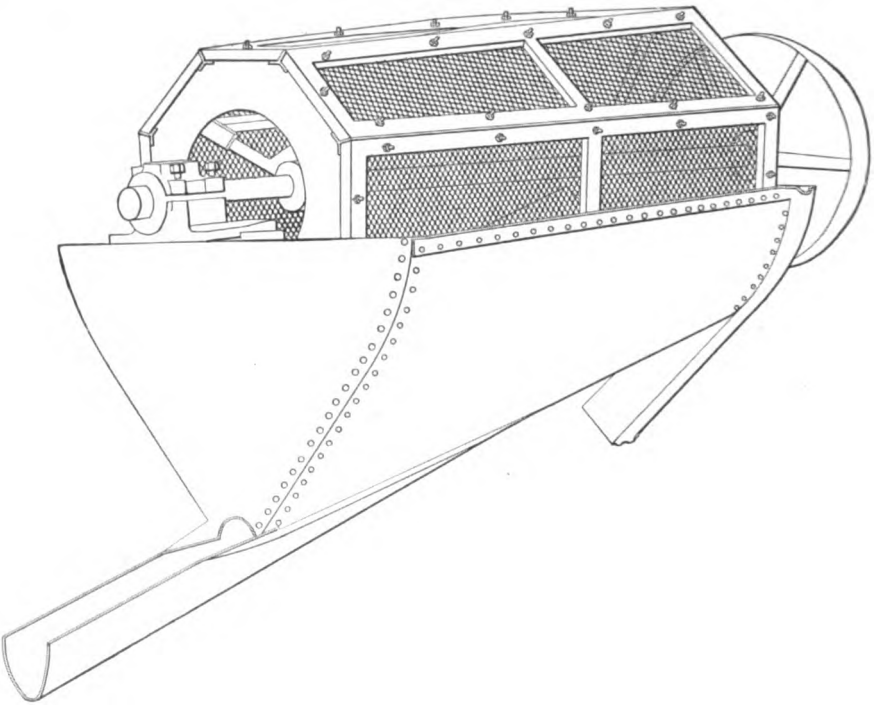

FIG. 663. — OCTAGONAL REVOLVING SCREEN.

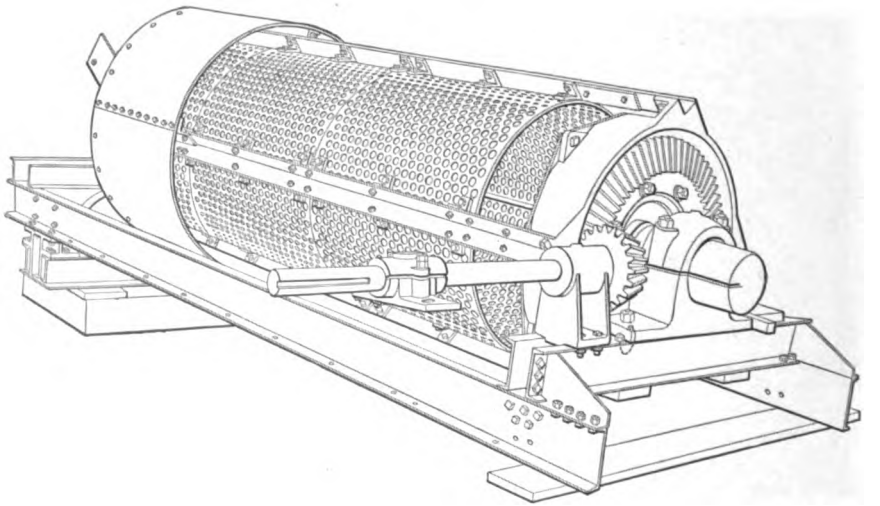

FIG. 664. — DENVER ENGINEERING WORKS REVOLVING GRIZZLY.

The tread ring or tire through which the material is fed at the head end of the screen is of chilled iron, ground true, and bolted to the head of the screen

so that it can be replaced when worn without necessarily renewing the entire head end. The tread ring rotates on chilled-iron rollers, ground true. These rollers have pressed into them steel shafts, the shafts revolving in bearings made in a solid cast-iron frame which extends across the head end of the screen.

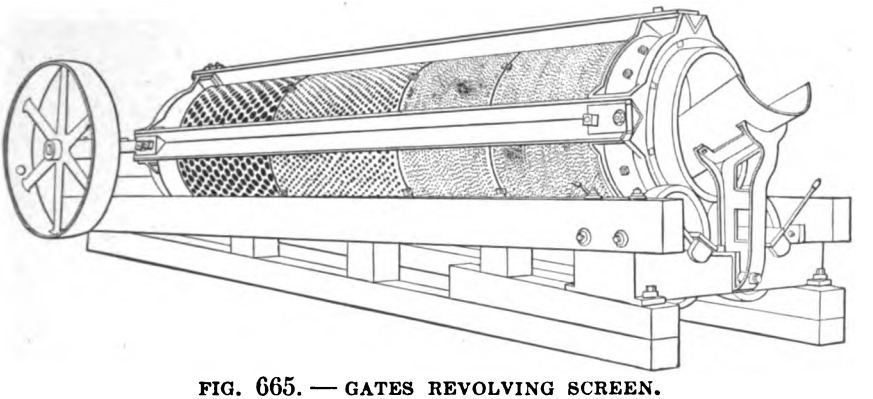

FIG. 665. — GATES REVOLVING SCREEN.

The screen is driven from the discharge end, and the main trunnion bearing at this end is made in another solid cast-iron frame. This frame also carries the main counter-shaft bearing. The fact that these two bearings are cast in a solid frame makes it practically impossible for them to get out of alignment and keeps the gears in proper mesh.

The main gear is bolted to the cast-iron discharge end so that it can be easily removed when necessary.

The inner surface of the head end where the material enters the screen, and the discharge end where the material leaves the screen, are fitted with manganese-steel removable wearing plates.

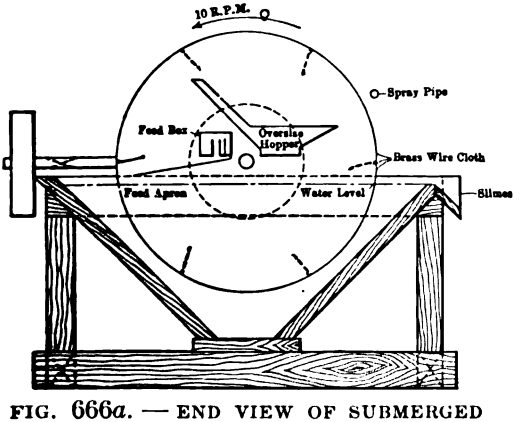

FIG. 666*a*. — END VIEW OF SUBMERGED TROMMEL.

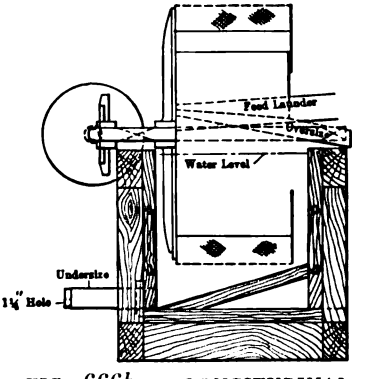

FIG. 666*b*. — LONGITUDINAL SECTION.

The screen is usually fitted with perforated sheet-steel screen sections, although it is sometimes fitted with screen sections made of wire cloth.

The screen is made in five sizes varying from 24 to 60 inches in diameter and of length to suit conditions at hand.

§ 1095. SUBMERGED TROMMEL. — Figs. 666*a* and *b* show a form of sub-

merged trommel in use at Mill 125.[10] Full details with regard to this trommel will be found under the description of the mill in another part of this volume.

§ 1096. THE KING SCREEN. — The King revolving screen, manufactured by the Hendrie and Bolthoff Manufacturing and Supply Company,[11] is shown in Fig. 667. This screen may be used for screening to any mesh down to 200, and is in operation down to 80 mesh. This design combines the advantageous capacity of the traveling belt with the compactness of a trommel. There is, moreover, no bending of the screen such as takes place in the case of a belt screen. As shown in Fig. 667, the screen *S* is approximately hexagonal in cross-section, with the sides curved inwardly on a radius equal to that of a

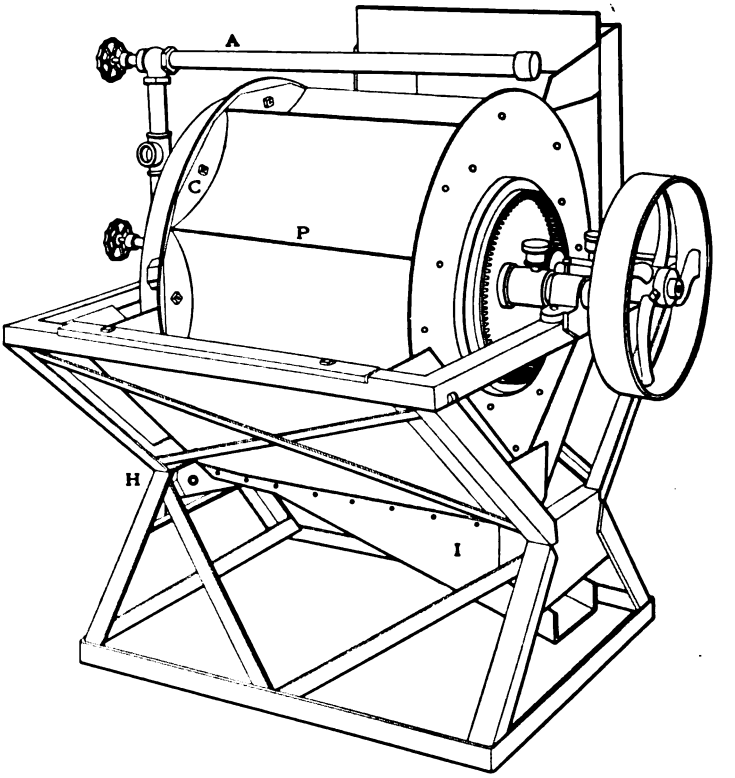

FIG. 667. — THE KING SCREEN.

circumscribed circle. The feed is distributed across the face of the screen by the feed sole, and falls on the outside of the screen. A part of the undersize falls through at this point into a hopper with spout *H*. As the screen revolves, the ore passes under the sprinkler *A*, above the screen, and by the time it reaches the point *P*, the undersize has all been washed through. The oversize falls off the screen into the oversize hopper *I*. This operation is assisted by inside sprinklers which spray off adhering particles. The two products are well separated, and may be discharged at either end. The designers claim that an important preliminary separation is brought about by the manner of feeding. The explanation given is that the larger, heavier particles are thrown farther than the smaller undersize particles; and that, since the screen is revolving in the direction taken by the ore as it comes to the screen, the over-

size cannot get beneath the undersize, and there is no blinding of the screen. When repairing or replacing the screen cloth the clips *C*, which are bolted with a single bolt and which hold the screen against a flange, are removed and the screen unwrapped from the frame. As there is no vibration to the machine, and the screen cloth is not run over rollers, but is held permanently in shape, the screens are of long life, and their occasional renewal is the only repair charge attendant upon the operation of the machine.

The screen cloth for the standard screen is 11 feet long and 1½ feet wide. It is commonly furnished by cutting a piece 3 feet wide and 5½ feet long in halves lengthwise. The life of the screen in one instance is given as 8 months for a brass cloth screen of 14 mesh. This screen was handling 20 tons per 24 hours.

The screen is run at 12 revolutions per minute. Its capacity is 20 tons in 24 hours for sizes down to 20 mesh, 18 tons down to 40 mesh, and 15 tons down to 80 mesh.

The King screen is also arranged so as to be fed upon the inside. In this form it is made up of a series of segments concave towards the inside.

Belt Screens.

§ 1097. In this class called belt screens, the sizing screen is made to travel over rollers similarly to a vanner belt. In the case of the Dunlap screen the belt is given a 45° slope and travels up the slope toward the feed end. In the

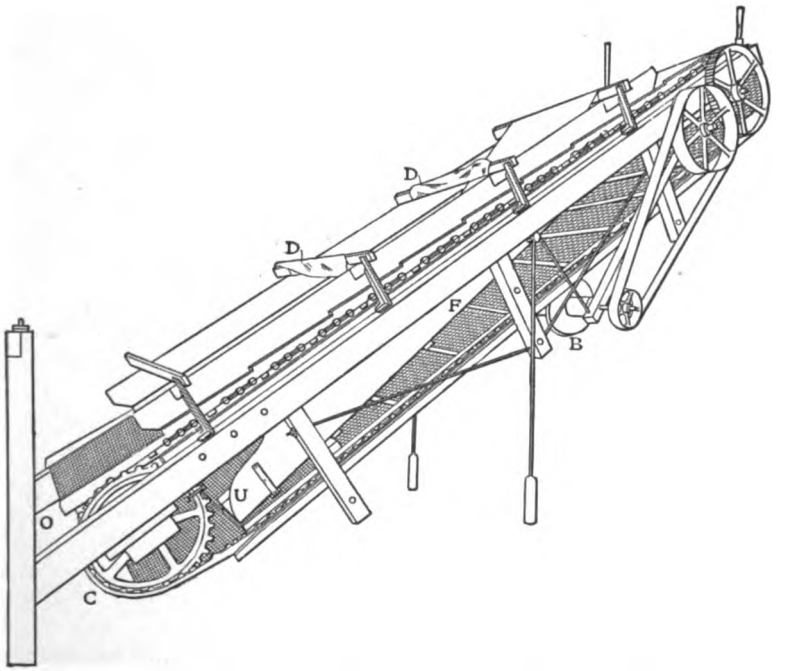

FIG. 668. — THE DUNLAP PERFECT CLAY SCREEN.

case of the Callow screen, the belt is horizontal and runs away from the feed end. The natural sag of the belt provides a concave surface similar to that of the King screen on which the material is sized.

§ 1098. The Dunlap Perfect Clay Screen. — The Perfect Clay screen [8] made by the Dunlap Manufacturing Company is shown in Fig. 668. Two

sprocket chains *C* carry slotted plates up a slope of 45°. The feed is brought to the top of the screen and it slides downward over the plates as they move upward. The oversize is rejected at the lower end of the screen at *O*, and the undersize falls upon a floor *F*, between the two parts of the belt, and then falls through the lower part of the belt, between the plates at *U*. The curtains *D* serve to check the speed of travel of the material being treated, if this proves necessary. As the plates move downward on the lower side, they are cleaned by a revolving brush *B*.

The special difficulty in screening clay is due to the blinding of the sieve on account of the adhesive quality of clay.

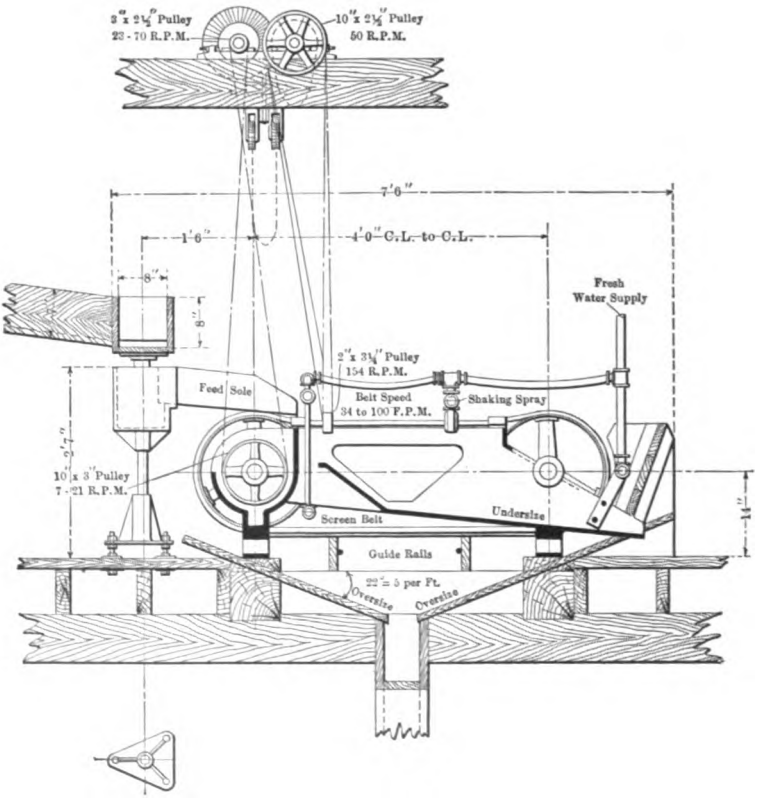

FIG. 669*a*. — SIDE ELEVATION OF CALLOW DUPLEX SCREEN.

The special quality of this screening machine which overcomes that difficulty lies in the revolving brushes which clean the perforations of the plate screen thoroughly at every revolution. Brushes of rattan or of steel wire are used, according to the quality of the screening.

§ 1099. THE CALLOW TRAVELING BELT SCREEN. — The Callow Traveling Belt Screen,[2] manufactured by the Utah Mining Machinery and Supply Company,[17] is a screen of high capacity which is doing satisfactory work on extremely fine sizes, even to 150 mesh. It is shown in detail in Figs. 669*a* and *b*.

The endless belt, 2 feet wide, is of any mesh screen from 10 to 200; and is held in position by sprocket chains at the side running over sprocket wheels. The screen is attached to the sprocket chains by means of strips of rubber which

are riveted to the belt and which button onto the chains. The screen and chains run over rollers which revolve on overhung shafts, so that there are no outboard bearings to prevent the ready removal of worn out screens; this operation consists in unbuttoning the rubber from the chain and drawing the screen off. The pulp is distributed across the width of the screen by the feed sole. The undersize is assisted to pass through the screen by a shaking spray near the tail roller. The oversize remains on the top of the screen and is removed as it passes over the tail roller by a wash-off spray. The undersize passes into the hopper between the two rollers. The machine is made duplex, there being two traveling screens to each. This provides a means of repairing

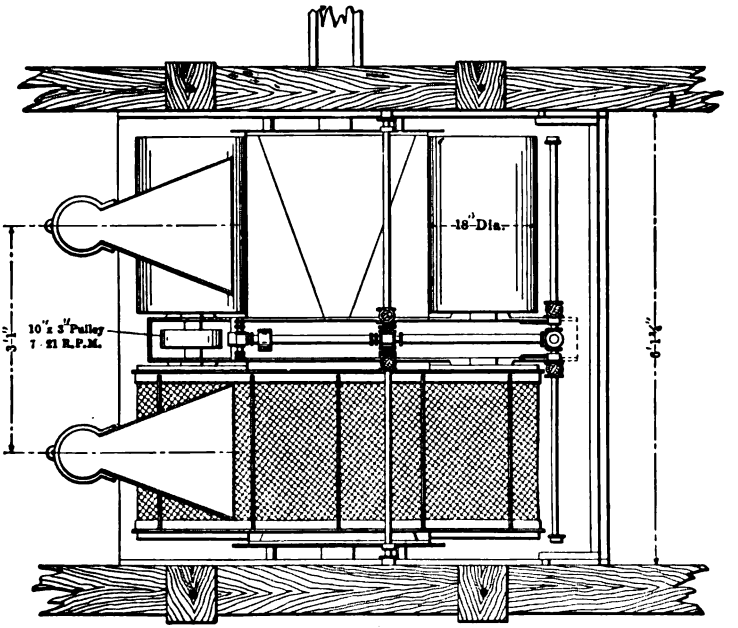

FIG. 669*b*. — PLAN.

either screen without stopping the feed, the whole of the pulp being run on one screen while the other is repaired. It may also be obtained with a single screen; when the machine is supplied in such form that the other screen may be added later. The speed is variable by means of cone pulleys, and the screen travels from 15 to 125 feet per minute. The claim is made by the designer of this screen that the screening is greatly assisted by a preliminary separation of the various sized particles as they leave the lip of the feed sole. This action is similar to that described in the case of the King screen. The screen is not submerged under water. Callow spent considerable time endeavoring to make the belt operate submerged; but found that the heavier grains would settle on the screen and prevent the finer from going through it.

This screen makes a clean separation, the oversize carrying from 5 to 13% of fines. The absence of vibration is much in its favor. The only repair charges are the cost of new screens.

The approximate capacity of the Callow Duplex Screen where the feed is 50% oversize is as given in Table 474.

TABLE 474. — CAPACITIES OF CALLOW SCREEN.

20	mesh	250	tons	feed	in	24 hours.
30	"	200	"	"	"	"
40	"	150	"	"	"	"
60	"	125	"	"	"	"
80	"	100	"	"	"	"
100	"	75	"	"	"	"
150	"	50	"	"	"	"

The duplex screen weighs 1,850 pounds. New screens cost $25 for meshes between 22 and 80. The water in the feed may be as low as 3 parts water to one part ore, and may be as high as 1,000 gallons per minute when screening on 30 mesh with the two screens; but it should not exceed 120 gallons per minute when a 20 or 30-mesh product is treated on 80-mesh cloth. In installations where this screen is employed to do all the classification below 2½ millimeters, an unwatering tank is placed at the head of each series of screens.

Each screen will treat from 2,500 to 5,000 tons of ore, which makes the cost of screening from ½ to 1 cent per ton. A 60-mesh screen effects practically the separation usually expected of an 80-mesh, and an 80-mesh that of 100-mesh. This machine is giving satisfaction and has been installed in a great many mills, for sizing the feed of tables and vanners, and in some cases of jigs.

C. D. Demond [7] says that on Cœur d'Alene ore an 80-mesh screen on a duplex machine lasted to treat 3,500 tons of material through 16 mesh, handling 100 tons per 24 hours and making 50% oversize. He thinks that a 40-mesh duplex screen will treat 200 tons per 24 hours of material through 2½ millimeters. The capacity is increased by increased velocity of the belt. A thin layer of ore on the belt gives the best results.

Bibliography of Screens.

1. Allis-Chalmers, Milwaukee, Wisconsin. Illustration of improved trommel and information concerning the same.
2. Callow, J. M., Salt Lake City, Utah. Private communication with regard to Callow screens.
3. Canadian Zinc Report, page 251. W. R. Ingalls. Bulletin Dept. of the Interior, Mines Branch, Dominion of Canada.
4. Colorado Iron Works, Denver, Colorado. Catalogue No. 9*a*.
5. Colorado Iron Works, Denver, Colorado. Bulletin 21. Description of octagonal revolving trommels.
6. Denver Engineering Works Company, Denver, Colorado. Bulletin 1028.
7. Demond, C. D., Anaconda, Montana. Private communication.
8. Dunlap Manufacturing Company, Bloomington, Illinois. Catalogue No. 5.
9. *Eng. & Min. Jour.*, Vol. LXXX., (1905), p. 435. A. H. Wethey. Pratt ore sizer.
10. *Ibid.*, Vol. LXXXIII., p. 1041. The Ferraris hand screen.
11. Hendrie and Bolthoff Manufacturing and Supply Company, Denver, Colorado. King screen catalogue.
12. Newaygo Portland Cement Company, Newaygo, Michigan. Catalogue of the Newaygo separator.
13. Rowand, Louis G., Franklin Furnace, New Jersey. Private communication with reference to the Rowand screen.
14. Stephens and Adamson, Aurora, Illinois. Description of Vibracone separator.
15. Traylor Engineering Company, New York City. Catalogue containing description of centripact screen.
16. John A. Traylor Engineering Company, Denver, Colorado. Bulletin E.
17. Utah Mining Machinery Company, Salt Lake City, Utah. Bulletin No. 300.
18. Wilcox, Herbert A. Superintendent Smuggler Mining Company, Aspen, Colorado. Private communication and blue-print.

CHAPTER XXXI.

PRINCIPLES OF SCREEN SIZING.

§ 1100. The present chapter supplements what has been said in Vol. I., pages 366 to 385, with regard to the principles of screen sizing.

§ 1101. SIEVE SCALE. — The list of successive sizes used in any mill, taken in order from coarsest to finest, is called the sieve scale. Rittinger held that in such a series the diameter of the holes in any screen must bear some constant ratio to the diameter of the holes in the one above it. He adopted 1.414 or $\sqrt{2}$ for this ratio, and his sieve scale starts with one millimeter hole and ranges up and down from this point as shown in Vol. I., Table 194, page 366. For testing purposes the author uses a sieve scale having the ratio $\sqrt[4]{2}$ or 1.189. This sieve scale is known as "Double-Rittinger." Table 475 gives the sieve scales at present in use in typical American mills.

TABLE 475. — SIEVE SCALES IN AMERICAN MILLS.

Mill Number.	Diameters of Holes in Millimeters.	Mill Number.	Diameters of Holes in Millimeters.
120	36, 18, 10, 7, 3.	156	44.5, 31.7, 15.8, 9.53, 4.76.
121	15, 10, 7, 4.	158	19, 9.53, 6.4, 4.76, 2.38, 1.58, 0.79.
123	25, 18, 12, 7, 3, 20,* 60.*	159	19, 15.8, 1.5.
124	9, 7, 4, 2.	161	38.1, 22.35, 7, 5, 2.5, 1.5.
125	20, 16, 13, 10, 8, 6, 5. 5, 4, 2.5, 10,* 16.*	162	38.1, 22.2, 8, 5, 2.5, 2.
126	9, 5, 2.5.	164	50.8, 31.7, 14.29, 3.
127	8, 6.	166	15.88, 7, 3.5, 2, 1.33, 1.
131	2,* 3,* 4,* 6,* 16,* 20.*	169	6.3, 4,* 20,* 30.*
132	2,* 3,* 4,* 6,* 8.*	170	15.8, 9.53, 7.87, 4.76, 2, 30.*
136	15, 10, 7, 5, 3.5, 2.5, 18,* 22,* 30,* 40,* 60,* 80.*	171	31.7, 15.8.
141	1.47, 1.07, 0.61, 5,* 16,* 18.*	172	25.4, 15.8, 12.7, 7, 5, 2.5.
142	3,* 4,* 10,* 16.*	174	19, 9.5, 6, 2.5, 1.5, 1.07.
144	15, 9, 6, 4, 2.5, 2.	176	19, 3.2, 20,* 30.*
148	12.7, 9.5, 6.3, 3.2.	179	15.8, 11.1, 6.3.
152	4.74, 2.77, 2.08, 1.47, 1.07, 0.81, 0.64, 0.51, 0.38, 0.25	181	15.8, 9.53, 4.76.

* Mesh.

The reasons why a single ratio running through the entire sieve scale may not be advisable are given in Ore Dressing, Vol. I., page 367.

§ 1102. LIMIT OF SCREEN SIZING. — The introduction of the King and Callow screens has made it possible to carry screening down to extremely fine sizes. Until recently the general American practice has been to use screens down to 2 or 3 millimeters size, followed by hydraulic classifiers. The European limit of screening has been somewhat lower than this, 1 millimeter to 1.5 millimeters. At the present time there seems to be a growing tendency to carry screening down to 80 and even 100 mesh,[9] there now being devices which are able to screen economically and efficiently to these very fine sizes.

§ 1103. STANDARDIZATION OF SCREENS. — The question of standardization of screens has come up recently to a considerable extent. W. Spencer Hutchinson [2] has shown that many records of sizing tests are rendered practically meaningless by the lack of uniformity of apertures in screens. He has pre-

sented data showing variations as high as 10% between the calculated and the actual openings of various meshes of woven wire cloth and has cited instances where certain meshes of different grades of wire gave openings differing among themselves as much as 20 and 30%. For use in the laboratory, Mr. Hutchinson strongly recommends the Double-Rittinger sieve scale.

Closely allied to the question of uniformity in size of aperture is the question of mesh versus size of opening. The report of the South African committee on the standardization of screens,[7] recommends doing away with the term "mesh" altogether and adopting size of aperture to express the size of the screen opening. This is surely a step in the right direction, for it is evident that to say an ore has been crushed through 10 mesh gives an approximate idea of the maximum size of the product; but unless the size of wire is specified the information might easily be misleading. Given both the mesh and size of wire, as has been pointed out, there are, due to the lack of uniformity of aperture in screens, variations which would interfere with making an accurate sizing test. It is to correct this evil that the Institution of Mining and Metallurgy is urging the adoption of the sieve scale shown in Table 476. This sieve scale is known as the "I. M. M" Standard Laboratory Sieve Scale.

TABLE 476. — BRITISH (I. M. M.) STANDARD SIEVE SCALE.

Mesh.	Diameter Wire.	Aperture Inches.	*Ratio of Each to the One Below.	Screening Area Percent.
5	0 1	0.1	1.61	25.00
8	0.063	0.062	1.24	24.60
10	0.05	0.05	1.20	25.00
12	0.0417	0.0416	1.33	24.92
16	0.0313	0.0312	1.25	24.92
20	0.025	0.025	1.25	25.00
25	0.02	0.02	1.205	25.00
30	0.0167	0.0166	1.17	24.80
35	0.0143	0.0142	1.135	24.70
40	0.0125	0.0125	1.25	25.00
50	0.01	0.01	1.20	25.00
60	0.0083	0.0083	1.17	24.80
70	0.0071	0.0071	1.145	24.70
80	0.0063	0.0062	1.24	24.60
100	0.005	0.005	1.51	25.00
150	0.0033	0.0033	1.32	24.50
200	0.0025	0.0025	.....	25.00

* Added by the author.

Walter McDermott,[6] chairman of the committee that prepared this table, says that they wished: (1) to adopt gradations not farther than necessary from customs of the past in laboratory work; (2) to avoid an excessive number of screens, because screening is not a scientific means of measurement of particles; and (3) to take into consideration the practical manufacture of screens sufficiently accurate for laboratory use.

It appears to the author that too little attention has been paid to the coarse sizes. In gold-milling practice, it is true that the fine sizes are most important, but a set of sieves for general laboratory use should include the coarser sizes which are of interest to those who may be concentrating copper, lead, and zinc ores.

§ 1104. MEASUREMENT OF SCREEN OPENINGS. — F. T. Snyder[1] has abandoned the use of either the term "mesh" or "aperture." He states all his results in hundredths of a millimeter as determined by the actual measurement of the largest grains of the product in question. In practice he uses a micrometer, especially designed by himself, for calibrating the small hand-testing screens. This micrometer is shown in Fig. 670.

A small quantity of the material in question is put through the screen; a portion of the undersize is placed, grain deep, on the disc *A*, the micrometer being held vertical. The disc *A* is then lifted until its handle comes in contact with the stop *S*, which is adjustable for a zero correction. The disc *A* is then locked in position by the screw *C*. By turning the ratchet screw *E*, the disc *B* is brought down upon the particles, and when a certain predetermined pressure has been reached, the handle *E* rotates in the handle F, and the advance of the disc *B* stops.

The diameter of the largest particles which have passed through the screen is then read off on the scale at *G*. The screw *C* is then loosened, and the disc *A* lowered and cleaned, and the operation repeated, so that a mean of 10 or more observations is obtained as the actual size of the largest material which the screen passes. This size, in hundredths of a millimeter, is then stamped upon the screen frame, and is used in reporting all results obtained with that screen.

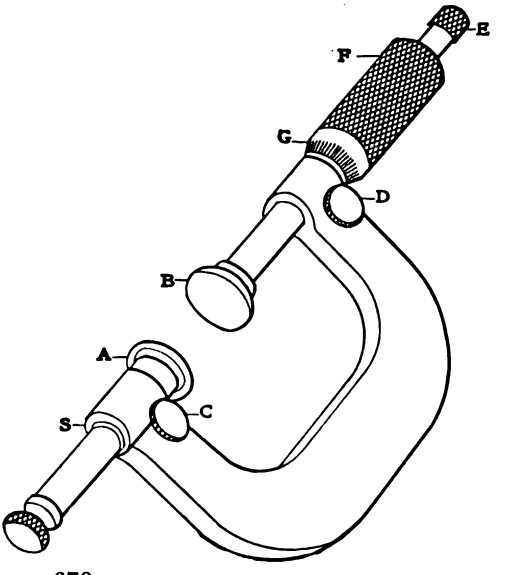

FIG. 670. — SNYDER MICROMETER CALIPER.

Care should be taken in the selection of material with which to calibrate a screen. For example, galena would be ill suited for such work, as the grains always lie on their longest faces and would hence be measured on their shortest face; while quartz would make good material because of the irregularity of its grains. Whatever material is used for calibrating, the fact remains that but one dimension of the grain is being measured. If quartz or some equally suitable material is used, as the designer of the device suggests, this trouble is minimized; otherwise the tendency is to get the shortest diameter of the particle.

The author, in his work, has employed the micrometer microscope very successfully. A powerful compound microscope is supplied with a finely graduated slide or scale so arranged that when the microscope is brought to a focus upon a number of particles whose dimensions are wanted, the graduated scale also appears in the field. Thus, in a sense, one can take the scale and lay it upon one grain after another, measuring the length and breadth of as many grains as may be necessary to get an idea of the average diameter of the grains. If this is repeated with ten or more fields and the final average taken, a figure is obtained which represents the size of the grains with a very considerable degree of accuracy. Compound microscopes fitted with micrometer scales can be obtained from any manufacturer of optical apparatus and may be used to measure grains as small as one one-thousandth of a millimeter in diameter.

The most ingenious and perhaps the best method that has been devised for measuring the openings in screens is the so-called "magnification method." The number of openings to the linear inch are first carefully counted; a microscope being employed if necessary. A small portion of the screen is then inserted in a stereopticon lantern in the place usually occupied by the slide and the image carefully focused on the screen. This having been done, the size of the open-

ings in the screen are measured as they appear in the magnified image. If, now, the screen that is being measured has thirty openings to the linear inch, the distance occupied by thirty openings in the magnified image is measured off. This distance, perhaps, 1 or 2 feet, is placed equal to 1 inch, and the exact sizes of the openings in the screen deduced from the measurements of the magnified image.

Let us suppose that in the above-mentioned case it was found that on the magnified image the distance covered by thirty openings has been found equal to 24 inches and that the average diameter of the several openings is 0.46 inch, then as the image has evidently been magnified 24 diameters the required size of screen opening is $\frac{0.46}{24}$ or 0.0191 inch.

§ 1105. WIRE CLOTH MANUFACTURERS' ASSOCIATION STANDARDS. — On the seventh of March, 1899, the Wire Cloth Manufacturers' Association [9] adopted the "Washburn and Moen" gauge as the standard for all iron or steel wire cloth, and the "Old English" gauge as standard for brass or copper wire cloth. These gauges now govern all wire cloth manufactured in the United States, and are given in full in Table 636 of the Appendix.

§ 1106. TYLER DOUBLE-CRIMPED MINING WIRE CLOTH. — Table 408 in the Appendix to Vol II. gives a list of what is termed heavy mining wire cloth, both iron and steel, brass and copper. This cloth is standard for use in stamp batteries, trommels, and jig screens. In choosing a screen for a mill, several factors have to be taken into consideration. If we start with a required size of opening, the tables which are given in the manufacturers' catalogue allow of considerable choice. For instance, if one desires a screen with opening equal to about 1.5 millimeters, or 0.06 inch, it is possible to get this opening with 8 mesh 16 wire, 9 mesh 17 wire, 10 mesh 19 wire, 12 mesh 24 wire, or 14 mesh 33 wire. The considerations which will govern the choice made are: 1, The screen chosen must have wire of sufficient size to give it the required strength and enable it to resist corrosion; 2, the wire must not be so coarse that the screen will blind easily, due to particles becoming firmly wedged in the mesh; and 3, the price of the screen must be taken into consideration, *i.e.*, will the heavier and more expensive screen cloth last enough longer to warrant the added cost? This latter point must be determined in practice. In general it may be said, however, that for screen cloth from 8 mesh to 30 mesh the screens in use will be found to be those costing for iron and steel wire approximately one-half dollar per square foot. For instance, in the case mentioned above, 10 mesh 19 wire would be the screen used; 12 mesh 24 wire and 14 mesh 33 wire would be ruled out as being too flimsy, and the coarser meshes would probably be ruled out because of the trouble occasioned by clogging of the meshes. The question of cost would also have to be considered. In cases in which acid interferes with the life of the screen, phosphor-bronze wire cloth is used and is listed the same as brass or copper as to size of the wire and the mesh. The cost of phosphor-bronze wire is greater than that of brass or copper, but it often proves more economical owing to its increased length of life. This wire cloth is double crimped in order to insure perfect spacing and consequent uniformity of aperture. Rolled screens are also obtainable; that is, the double-crimped screens of any mesh are rolled, which makes it possible for a shovel to pass over them readily. By this means the size of holes is moreover kept constant, since the rolling locks the wires securely in place, absolutely preventing slip. Rolled-slot wire screens are also manufactured by the W. S. Tyler Company.[10] For these screens are claimed all the advantages of slotted-plate screens and in addition freer discharge. As applied to Huntington mills the rolled-slot screen has been shown to be inferior to punched-plate in at least one instance, the details of which are given in Chapter XXVII. of this volume.

§ 1107. GALVANIZED AND TINNED WIRE CLOTH. — Galvanized and tinned wire cloths are made by the leading manufacturers of wire cloth.[5] Both these forms of wire cloth are used where the screens are subjected to the action of acid waters or other corroding agents.[10]

§ 1108. MILL SCREENS. — For coarse screening, say down to 0.25 inch, perforated steel plates and cylindrical trommels give the best service.[4] From this size down to 0.10-inch opening, wire cloth is preferable, as is also the cylindrical form of trommel. For finer meshes, Argall prefers the hexagonal form of trommel, of light construction so that the weights or hammers when they fall will throw the whole sheet into vibration, and thus tend to keep the meshes open. Heavy rigid screens are a mistake.

Ample screening capacity, particularly in the final or finishing screens, is a very important item. On this point, dry crushing shows up very unfavorably as compared with wet work.

In screening to 30 mesh 28 wire or 0.0171 inch, Argall has found that it required as much as 1 square foot of fine screen to 5 cubic feet of clayey ore per 24 hours; and for general work he would not take less than 1 square foot of 30 mesh 28 wire or 0.171-inch cloth for every 6 cubic feet of finished product required daily. Large screening surface means greater output, and less repairs, owing to the thinner streams passing through, and less weight on the fine wire cloth of the screens. The cost of maintaining such a series of screens he has found to be 2 cents per ton, based on data collected from screening practically 100,000 tons.

The proper peripheral speed of fine hexagonal trommels is about 180 feet per minute. The angle of slope should not exceed 10° from the horizontal.

For the theory of trommel sizing, discussion of the effect of the various adjustments such as slope, speed of rotation, etc., the reader is referred again to Ore Dressing, Vol. I., page 373.

§ 1109. WEAR OF SCREENING SURFACES. — Table 477 shows the wear on screens in use at Mill 139.[8]

TABLE 477. — WEARING TABLE. TROMMEL SCREEN AT MILL 139.

Abbreviations. ft.=feet; in.=inches.

Size.	Material.	Life.		Cost Cents per Ton.	Remarks.
		Days.	Tons.		
1½ in. round hole. 42 in. by 10 ft. 0 in.	Punched steel plate	130	59,200	0.0935	4 complete sections.
¾ in. round hole. 48 in. by 6 ft. 0 in.	" " "	143	64,000	0.152	9 " "
8 mm. round hole. 48 in. by 8 ft. 0 in.	" " "	28	15,100	0.234	4 " "
4 mm. round hole. 48 in. by 6 ft. 0 in.	" " "	103	46,500	0.182	18 " "
2½ mm. round hole. 48 in. by 6 ft. 0 in.	" " "	89	37,650	0.131	11 " "
10 mesh–19 wire. 48 in. by 6 ft. 0 in.	Steel wire	139	63,300	0.271	25 " "
2½ mm. round hole. 48 in. by 6 ft. 0 in.	Punched steel plate	139	62,600	0.308	43 " "
10 mesh–19 wire. 48 in. by 6 ft. 0 in.	Steel wire	143	63,850	0.392	36 " "

Table 478 gives the wear of punched-steel screens in use at Mill 144.[11]

TABLE 478. — WEAR OF PUNCHED-STEEL SCREENS AT MILL 144.

Screens.			Life.		Cost of Screen per Ton Ore Treated. Dollars.
Gauge.	Size Hole mm.	Distance Between Holes Centre to Centre. Inches.	Days.	Tons.	
3	15	⅜	385	89,863	0.003388
6	9	5/16	287	64,936	0.002534
10	6	¼	340	77,838	0.001264
12	4	¼	334	76,283	0.001520
16	2.5	3/16	402	94,313	0.002363
18	2	3/16	393	92,063	0.001096

BIBLIOGRAPHY OF PRINCIPLES OF SCREEN SIZING.

1. *Eng. & Min. Jour.*, Vol. LXXVI., (1903), p. 959. F. T. Snyder. Description of the Snyder micrometer caliper as used for standardizing sieves.
2. *Ibid.*, Vol. LXXX., (1905), p. 213. W. Spencer Hutchinson. Standardization of laboratory screens.
3. *Inst. Min. & Met.*, Vol. X., (1901-2), p. 244. P. Argall. Sampling and dry crushing in Colorado.
4. *Ibid.*, p. 247.
5. Ludlow-Saylor Wire Company, St. Louis, Missouri. Catalogue of wire cloth screens.
6. McDermott, Walter. Private communication with regard to the "Institution of Mining and Metallurgy Standard Sieve Scale.
7. *Min. & Sci. Press*, Vol. XCIII., (1906), p. 654. Philip Argall. Discussion of the question of mesh versus size of hole.
8. Potter, William C., Aguas Calientes, Mexico. Private communication.
9. Report of the Commission Appointed to Investigate the Zinc Resources of British Columbia and the Conditions Affecting their Exploitation, Ottawa, 1906, p. 251. P. Argall. Present limit of economical screening.
10. Tyler, W. S., Company, Cleveland, Ohio. Catalogue No. 24. Description of wire cloth screens.
11. Van Winkle, C. T., Silverton, Colorado. Private communication.

CHAPTER XXXII.

CLASSIFIERS.

§ 1110. Before attempting to describe the various improvements and innovations, in the way of classifiers, introduced since the appearance of Ore Dressing in 1903, it may be of interest to review briefly the history of hydraulic classifiers.

§ 1111. HISTORY OF HYDRAULIC CLASSIFERS. — The hog-trough classifier (Ore Dressing, page 390) is believed by the author to have been used in the Lake Superior copper mills as early as 1868. This classifier is non-positive in its action, by which is meant that it does not respond quickly to regulation, and when it does respond the result is uncertain. When the wash water, "hydraulic water," is regulated, one has to wait a minute to see what result will be produced by the change. If too much is added, an arch forms over the sorting column, which soon bursts, sending into the second spigot product grains which belonged in the first. This difficulty leads to the use of too little water for all four pockets and in consequence slime is found in all four products.

Wengler (Ore Dressing, page 413), quite early in the seventies, designed a classifier consisting of a series of hoppers with rising currents, but it does not appear to have found its way into the mills. In the year 1881 there was invented and installed the Calumet or Richards-Coggin classifier. This was probably the first positive classifier to be used. In this classifier the action of the wash water is positive and the effect produced is instantaneous. When this classifier is run intelligently no slime need be found even in the fourth spigot product. The Calumet classifier was quickly followed by the Evans, the Anaconda, and by a number of others (see Ore Dressing, pages 397 to 433), also by the classifiers described in this volume which represent the best practice of to-day.

For the treatment of slimes, Rittinger's spitzkasten, a surface-current box classifier, held its own for many years, being used to distribute and grade fine sand and slime and to settle slime to the utmost limit then thought practicable.

The V-shaped tanks, adopted by Evans and others at Lake Superior and in Montana, only attempted to separate slime up to the economic limit. They served their purpose in their day, but were wasteful in that they set the economic limit too coarse. The Merrill slime cones, finishing cones, and water cylinders, also the Callow slime cones and Callow water cones, go much beyond any previous separators for removing slime from sand or water from slime.

§ 1112. PURPOSES OF CLASSIFIERS. — Classifiers are used for the following purposes:

(*a*) To divide up sand and slime for feeding concentrators and at the same time so to grade it that the several concentrators shall receive feed products ranging from the coarsest fed to the first machine to the finest fed to the last machine. The hydraulic classifiers and the surface-current box classifiers (spitzkasten) are used for this purpose. (Ore Dressing, pages 389 to 443.)

(*b*) To divide up the sand between two or more machines all of which

receive approximately or exactly the same quality of feed. The various fixed and revolving dividers, also the tank distributors, do this work. (Ore Dressing. pages 449 to 450.)

(*c*) To separate sand from slime. The slime cones or surface-current box classifiers supplemented by a hydraulic classifier are suited for this purpose.

(*d*) To separate water from sand. The various dewatering boxes, the Fleming wheel, chain bucket elevators, and similar devices are used for this purpose.

(*e*) To separate water from slime. The Merrill water cylinder and the Callow water cone are both used for this purpose.

§ 1113. PRINCIPLES OF ACTION. — A hydraulic classifier for dividing and grading sands is generally provided primarily with a series of sorting columns or vertical openings, up through each of which a current of wash water is rising, and down through each of which a product of sand is settling. By having the rising currents graded from fast in the first sorting column to slow in the last, we obtain a series of spigot products ranging from heavy in the first to light in the last spigot. The slimes go into the overflow. To accomplish the above work each sorting column needs a feed sole for bringing in the feed (sand and water), and for doing a certain preliminary classification called launder classifying; *i.e.*, the heavier grains settle to the under part of the stream of pulp while the lighter particles are forced up. Next there is needed a pocket with ascending water current for doing the roughing work of lifting out the bulk of the lighter material, a sorting column in which the cleaning out of the lighter part is finished, and a pressure box for furnishing rising water for the sorting column and discharge water for the spigot. This pressure box forms a sort of gateway in most classifiers to stop and turn back the grains that are too light to pass down and out through the spigot. The work on the feed sole is done wholly by the feed water. The work in the pocket is done by the ascending feed water and wash water combined. The work in the sorting column is done by the rising wash water only, while the discharge of the spigot sand is accompanied by the spigot water alone.

Not only does the classifier separate the larger grains of the earlier spigot from the smaller grains of the later, but it establishes relations between two minerals of different specific gravity depending on and amenable to the following principles: (1) Of two grains of the same mineral, of like form, the larger settles the faster; (2) of two grains of like form and size but different specific gravity, that with the higher specific gravity will settle the faster; and (3) of two grains of like form but different specific gravity, but which settle at the same rate, the one with the higher specific gravity is always smaller than the one with the lower specific gravity.

§ 1114. LIMITATIONS OF THE HYDRAULIC CLASSIFIERS. — In the Lake Superior region nothing larger than 4.76 mm. ($\frac{3}{16}$ inch) is fed to hydraulic classifiers. The usual Missouri and Montana limit is 2.5 mm., the only exception being where grains up to eight millimeters are treated in an annular classifier at Mill 155. The speed of settling and therefore the quantity of water required are too large for using a classifier on grains much larger than 8 mm., also the spigot cannot be less than, and should be more than, three times the diameter of the largest grain. This calls for a large quantity of water in the spigot product. At the fine end little hydraulic classification is attempted on grains finer than 0.15 or 0.1 mm., on account of the extreme slowness of settling and the consequent cutting down of capacity. The fines are settled for further treatment in surface-current box classifiers (spitzkasten), in Callow water cones, Merrill water cylinders, or some similar device.

§ 1115. DIFFICULTIES ATTENDING CLASSIFICATION. — The writer finds that

classifiers in general have very short sorting columns, usually not more than one inch long, and secondly, that they make no provision for obtaining an even rising current or for overcoming adverse tendencies. For example, let us study a minute the Evans classifier, in most respects a simple and well-designed device. Here advantage is taken of launder classification, there is simplicity of action, ease of adjustment, and small loss of mill head. These advantages are, however, gained at the expense of a very short sorting column. (See Fig. 671.) The carrying current A, with the heaviest feed grains, opposes the sorting current C, and in so doing forces small grains, which belong in the overflow, into the spigot; and on the other hand, the leaving current B sucks out and increases the velocity of the sorting current D, carrying into the overflow grains which belong in the spigot. Both of these adverse tendencies cut down the efficiency of the classifier. In other words, all short-column classifiers will have, owing to the heavy load on the up-stream side, fines in the spigot product, and, because of the excess upward velocity on the down-stream side, coarse particles in the overflow which belong in the spigot.

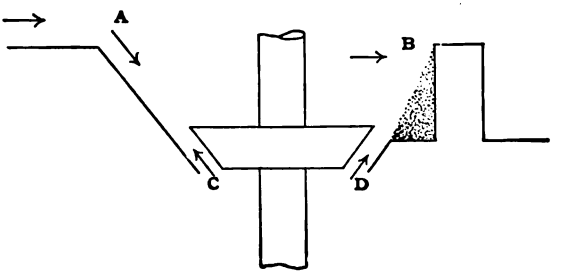

FIG. 671. — SORTING COLUMN OF EVANS CLASSIFIER.

§ 1116. MEANS FOR OVERCOMING ADVERSE TENDENCIES. — Ferraris has succeeded in diminishing the adverse tendencies just mentioned, by lengthening the sorting column and by applying the rising wash water in a very systematic way. The New Standard classifier has made improvements in a similar way. The writer has diminished these adverse tendencies by lengthening the vertical sorting column and by placing a vortex at the bottom to give a helical rising current. Both of these improvements are embodied in the pocket vortex, tank vortex, and annular vortex classifiers. The tank vortex has, in addition, a perforated plate which adds to the classifying action of the device. The improved vortex with long sorting column and helical current distributed over the whole length is still better. The Longdale annular vortex classifier at Mill 155 is probably the most systematic classifier in existence. It has a helical rising current of constant velocity and the descending sands settle in helical paths in opposite thread. (See Figs. 672 and 673.) This gives a very perfect division between light and heavy grains.

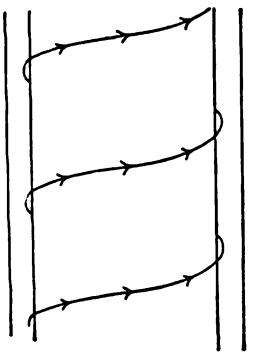

FIG. 672. — DIAGRAM SHOWING HELICAL CURRENTS.

G. G. Gates has made use of a radial spray in a long sorting column giving excellent results. (See Vol. I., page 418.) The Calumet classifier with a jet of clear water penetrating a bank of sand has a clear water core and gradation from this out to normal pulp. By adjusting the spigot to approach the clear water core a very perfect classification is obtained.

The Wolf-Tongue classifier places a diaphragm and contracted tube in the lower part of the sorting column. This gives a bed of quicksand and results

in hindered settling relations between the lower part or sorting column and the upper part or quicksand chamber. The improved Wolf-Tongue classifier has a long sorting column with helical current applied all the way from top to bottom. The pulsator classifier, whether inverted or direct, uses a screen for obtaining the quicksand column and a pulsating rising current to even the layers of sand and remove adverse tendencies. It probably gives as even a

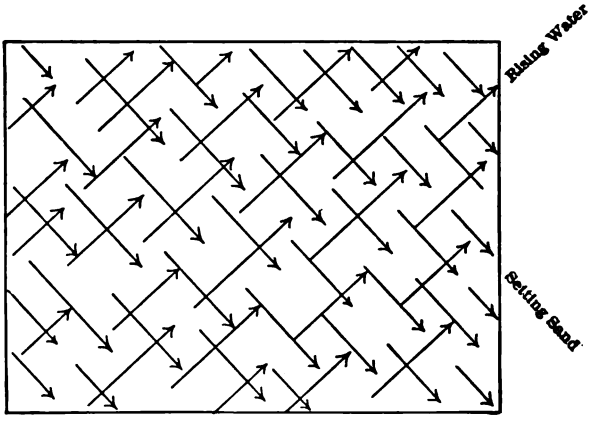

FIG. 673. — HELICAL CURRENTS UNWRAPPED.

treatment of sands as can be obtained and delivers its products with the advantage of hindered settling ratio. The pulsator classifier has, moreover, a very large capacity, the 4-inch machine treating 175 tons of 2½- to 0-mm. material per 24 hours.

§ 1117. CLASSIFICATION. — According to the connection between the compartments and the mode of handling the feed water, carrying current, and wash water, the classifiers may be divided into classes as follows:

A. Using wash water (hydraulic water).
  I. Treating sand under free settling conditions.
    (1) Trough or shallow-pocket classifiers.
    (2) Deep-pocket classifiers.
    (3) Tubular classifiers.
  II. Treating sand under hindered settling conditions.
    (1) Trough or shallow-pocket classifiers.
    (2) Deep-pocket classifiers.
    (3) Tubular classifiers.

B. Not using wash water (hydraulic water).
  I. Pulp thickeners.
    (1) Surface-current box classifiers having carrying current horizontal or nearly so.
    (2) Whole-current box classifiers having carrying current horizontal or nearly so.
    (3) Ascending-current cones or cylinders having carrying current vertical or nearly so.
  II. Clarifying devices (with or without use of chemicals or other means to promote settling).
    (1) Clarifying tanks.
    (2) Clarifying reservoirs.
  III. Distributing devices.

(1) Distributing Boxes.
(2) Distributing or sizing launders.
(3) Mechanical distributors.

A trough or shallow-pocket classifier is one in which the pockets are so small and insignificant that they can be practically ignored in the computations or other provisions for working, the sorting column being the only part which needs to be made to measure. There are no shallow-pocket, free-settling classifiers described in the text. The Evans classifier, however, is an example of this class.

A deep-pocket classifier is one in which the pocket is so large that one must either compute for velocity and try to have the water quantity closely up to the computed amount, as in the pocket vortex, tank vortex, and annular vortex; or one must provide a plunging stream of water to break up banks, and in this way provide for the removal of the grains that are too light to go down and too heavy to be lifted out by the average current. Most of the small cone classifiers come under this class.

A tubular classifier (*spitzlutte*) is one in which the pocket treatment takes place in a tube or passageway having a nearly constant area of cross-section. In a tubular classifier the current rises vertically or in a steeply sloping direction.

Deep-Pocket Free-Settling Classifiers.

§ 1118. The Merrill Small Cones. — The Merrill small cone classifiers [41] are used to treat the spigot products from Merrill large cone classifiers. At Mill 106 twenty-four of these small cones treat the spigots of six Merrill large cones. The large cones act as clarifying tanks while the small cones deliver spigot products free or practically free from slimes and an overflow consisting of slimes. These small cones are provided with peripheral overflow. At the bottom is a sorting column surrounded by a pressure box into which the hydraulic water is introduced, and an open spigot through which the sands, which are sufficiently heavy to settle against the rising current of water, pass from the device. The classifier is three feet in diameter at the top and has sides sloping at an angle of 30° from the vertical. The feed enters at the center and the overflow is at the periphery as has already been indicated.

§ 1119. Burgan Classifier. — The A. L. Burgan Classifier,[9] of which a plan is shown in Figs. 674*a*, *b*, and *c*, consists of two one-spigot classifiers (1) and (2) built together with a common overflow tank (3). The overflow tank is provided with hydraulic water, but this is not always used. This classifier is in use at the Tamarack and Osceola Stamp mills in Michigan, and has been very satisfactory. As may be seen in the illustrations, each pocket consists of a hopper-shaped box with a slit in the bottom through which the heavy grains settle against the rising current. The hydraulic water enters at (4), comes into the pressure box (5), and rises through the slits (6). The spigot products pass out through the spigots (7) with a portion of the hydraulic water. The pockets (1) and (2) overflow at (8) and (9), the overflow passing into the common overflow tank (3) which yields a spigot product perhaps one-half slimes and an overflow that is all slimes. The spigot from the overflow tank (3) is treated on the finishing jigs with the hutch work of the roughing jigs. The advantage claimed for this classifier is that it gives each jig a full and uniform load, thus increasing the capacity of the machines over that obtained when a four-spigot classifier was used.

§ 1120. The Swain Hydraulic Classifier. — The Swain Hydraulic Classifier [56] has a pipe sorting-column made in part of glass for ease of inspection and control. (See Fig. 675.)

Water is admitted through a gate valve *n* into chamber *f*. If necessary an additional amount may be supplied through the mechanically operated

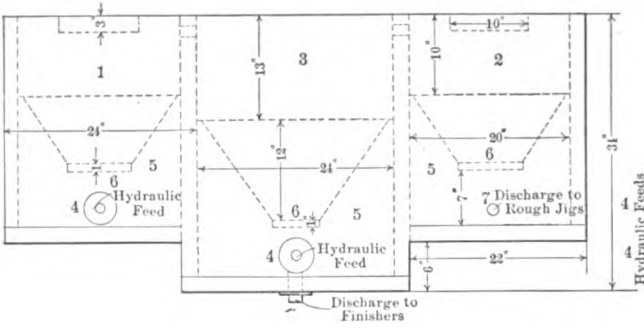

FIG. 674*a*. — SIDE ELEVATION OF BURGAN CLASSIFIER.

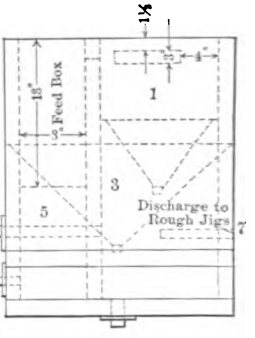

FIG. 674*c*. — END ELEVATION.

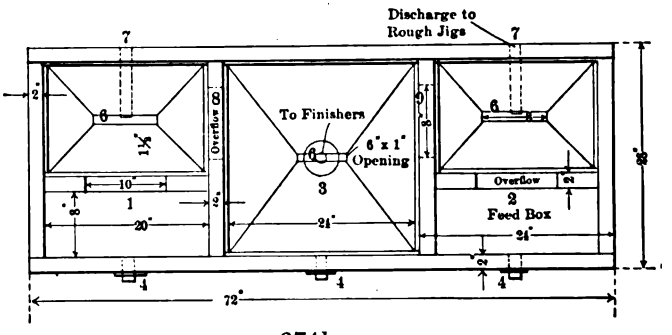

FIG. 674*b*. — PLAN.

valve *o*. The spigot opening *k* can be bushed to any desired size. The elimination of eddies and counter currents in the upward current is accomplished by the peculiar arrangement of the water chamber, the outer tube with perforations, and the inner tube which properly distributes the water in the annular opening between them. This gives a quiet upward current which allows particles of proper size to fall and fines to overflow. The length of the sorting column may be either shortened or lengthened by means of screws *p*. The area of the pocket *r*, Fig. 676, is made smaller or larger by moving the baffle board *s* by the toggle joint *t* through the bell crank *u*.

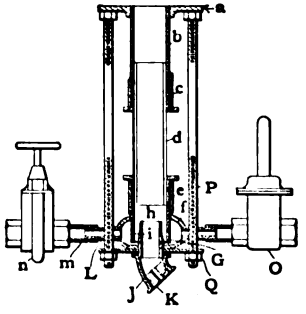

FIG. 675. — SORTING COLUMN OF SWAIN HYDRAULIC CLASSIFIER.

The claim made for this classifier is that it uses less water than other classifiers, and that the glass tube allows of careful adjustment. It would seem to the writer that the glass tube would be a disadvantage rather than an advantage on account of the liability of breaking. It would also seem that the tube would soon become so scratched on the inside by the ore particles as to make it impossible to observe the action.

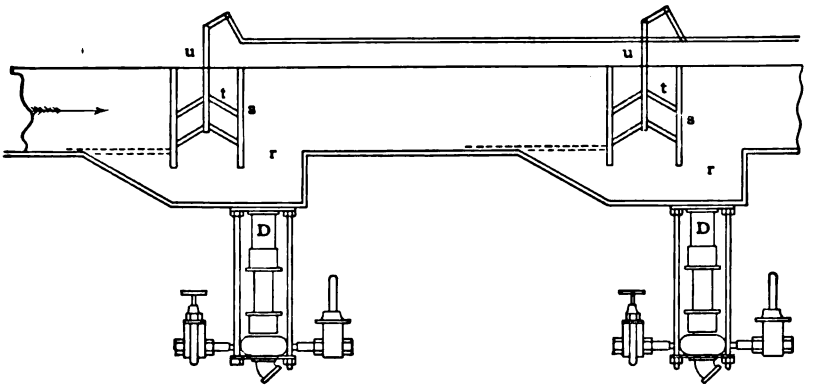

FIG. 676. — SWAIN HYDRAULIC CLASSIFIER.

§ 1121. THE NEW STANDARD HYDRAULIC CLASSIFIER. — In the New Standard Hydraulic Classifier made by P. B. McCabe & Company [39], the hydraulic water enters through the pipe (1), Fig. 677, into the pressure box (2) rising and passing out through the adjustable annular slit at (3). The rising current passes up through the annular opening (4), and the sands which are able to settle pass out through the spigot (5). The spigot is supplied with a suitable cock for regulating the discharge. The upper portion of the classifier consists of a conical tank with peripheral overflow, into the center of which the feed is introduced. This classifier is a development of the old double-cone type over which it is claimed to possess numerous advantages.

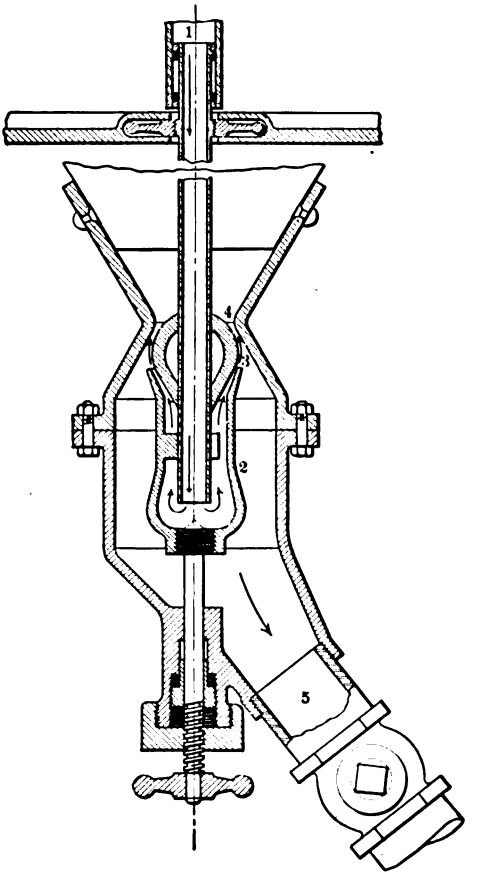

FIG. 677. — NEW STANDARD HYDRAULIC CLASSIFIER.

§ 1122. RICHARDS POCKET VORTEX CLASSIFIER. — The pocket vortex classifier (Ore Dressing, page 401) is a deep-pocket classifier. The form at present recommended is shown in Figs. 678*a* and 678*b*. In designing this classifier the author makes the computations under what he considers to be ideal conditions. The mill man, in using the classifier, will, of his own volition, approximate the computed conditions, since he will seek to grade the sands in the several spigot products by the eye, according to the sizes computed; and to get these he will use approximately the computed amounts of water.

Let us assume that we have to treat 100 tons per 24 hours of grains from 2.5 to 0 millimeters, that the classifier is to have 4 pockets, that the overflow

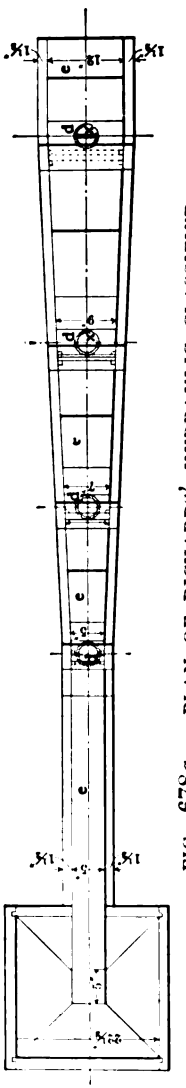

FIG. 678a. — PLAN OF RICHARDS' HYDRAULIC CLASSIFIER.

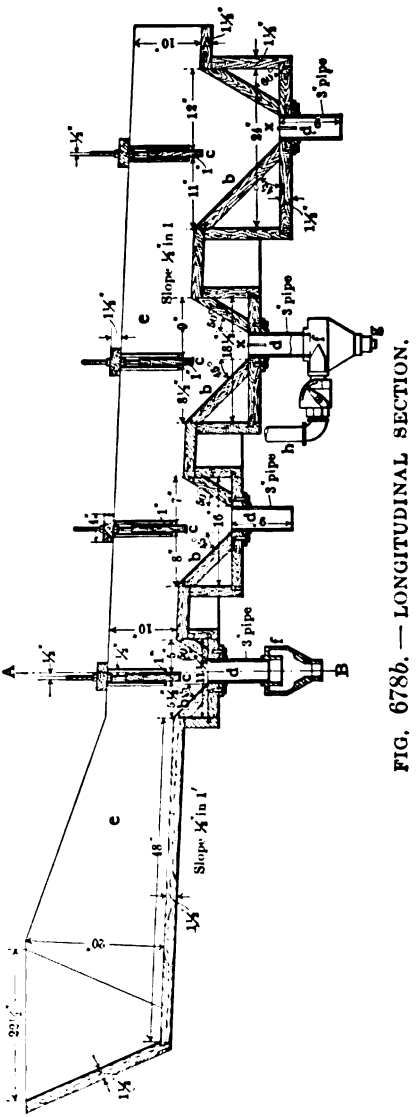

FIG. 678b. — LONGITUDINAL SECTION.

is to consist of 0.25 to 0-millimeter grains, and that the material has been crushed by rolls. Under these conditions Table 479 will give approximately the dimensions, requirements, and delivery of such a classifier.

TABLE 479.—TABLE ILLUSTRATING COMPUTATION OF RICHARDS' POCKET VORTEX CLASSIFIER.

	Feed.	1 Spigot.	2 Spigot.	3 Spigot.	4 Spigot.	Overflow.
1. Tons sand, 24 hours	100	30	25	20	15	10
2. Sand sizes, millimeters	2.5–0	2.50–1.75	1.75–1.15	1.15–0.625	0.625–0.25	0.25–0
3. Kilos minute, sand	63.1	18.9	15.8	12.6	9.5	6.3
4. Rising currents, millimeters, second	.....	139	103	67	30	.....
5. " " " minute	.....	8,340	6,180	4,020	1,800	.....
6. Liters sand, minute	23.9	7.15	5.98	4.78	3.60	2.39
7. Water, liters, minute	252.40	21.45	17.94	14.34	10.80	316.93
8. Total water and sand liters, minute	276.3	28.60	23.92	19.12	14.40	319.32
9. Area, section sorting column, square millimeters	.....	3,410	3,871	4,755	8,000	.....
10. Size of pipe (theoretical)	.....	2½	2½	3½	4	.....
11. " " " (practical)	.....	3	3	4	4	.....
12. Carrying current, ore and water, liters, minute	.....	290.60	302.56	312.12	319.32	.....
13. Pocket, square millimeters area	.....	34,600	48,950	77,640	177,400	.....
14. " " inches area	.....	53.6	75.89	120.37	275.00	.....
15. " side of square in inches	.....	7.32	8.7	10.97	16.6	.....
16. The heights acting on spigots, feet	.....	2.2	2.4	2.6	2.8	.....
17. Velocity, millimeter, second, due to height	.....	3,627	3,779	3,932	4,084	.....
18. Velocity, millimeter, minute, due to height	.....	217,620	226,740	235,920	245,040	.....
19. Spigots, diameter inches	.....	½	½	¾	¾	.....
20. Area, square millimeters of spigots	.....	127	127	71	71	.....
21. Liters water and sand, minute	.....	27.638	28.796	16.750	17.398	.....
22. Liters water, minute	.....	20.49	22.81	11.97	13.79	.....
23. Gallons " "	.....	5.413	6.026	3.162	3.643	83.730

We find by a sizing test that 10 tons per 24 hours are in the 0.25 to 0-millimeter product, which we consider is satisfactory for our overflow product.

From the sizing test and plotting, moreover, we may obtain a cumulative curve of the sand that is to be classified, and can then lay off on the curve the spigot products and overflow, getting the tons per 24 hours and the sizes of grains for each spigot. Of the three cumulative curves of Fig. 679, the convex is that obtained by rolls, the concave is that produced by stamps, and the straight line is a compromise which the writer has used with good results when designing classifiers. The adaptability of a classifier is so great that when the straight line is used the classifier so designed can be used for either pulp from stamps or from rolls. The only variation from the calculated result is that when treating stamp-mill pulp, the finer spigots will have more than was computed for them; and when treating pulp from rolls, the coarser spigots will have more.

In computing the classifier, it will be seen that there are three variables to be considered, namely: the sizes of grains, the rising currents, and the tonnage. One can assume either one, and calculate the other two. For determining the number of tons in each spigot product, the geometrical progression is very attractive and is theoretically the best. It, however, does not satisfy the practical demands of the mill man because it gives him a deficit of feed on the fine tables and an excess on the coarse tables. On the other hand, if the same load was given on all tables, this would virtually overload the tables treating finer products and underload the tables treating the coarser products. For these reasons the writer is inclined to the view that since the arithmetical progression gives a series between the geometrical progression and the equal weight plan, it is the best plan to adopt. In regard to geometrical progression it may be said that where the smallest term is more than half the average of all the terms, the weights it gives are not extreme and would satisfy the mill man. In such cases, it should be used. Table 481 gives an example of this kind.

If, then, we are making our computations on the 100-ton basis and the overflow is 10% of the material fed, we may figure the quantities in the various

spigot products as follows: Starting with the overflow as 10 tons, we add 5 tons to the overflow to obtain the fourth spigot; and so on, adding 5 tons to the fourth spigot to get the third, 5 tons to the third to get the second, and 5 tons to the second to get the first.

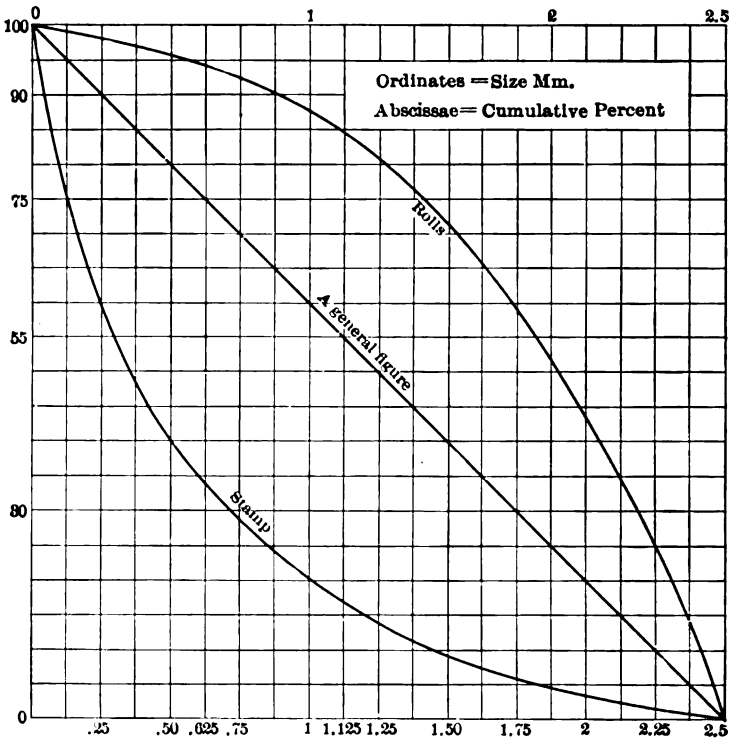

FIG. 679. — CUMULATIVE CURVES FOR ROLL CRUSHED AND STAMP CRUSHED MATERIAL ALSO COMPROMISE CURVE.

The computations involved in Table 479 will now be explained line by line.

KEY TO COMPUTATIONS.

Line (1) Tons per 24 hours are assumed. (See § 1122). Line (2) 2.5 to 0-millimeter feed and 0.25- to 0-millimeter overflow are assumed. To get the average sizes of grains in the other products we have 10 + 15 = 25 tons, 100: 25 = 2.5 mm.: 0.625 mm.; 10 + 15 + 20 = 45; 100: 45 = 2.5 mm.: 1.15 mm.; 10 + 15 + 20 + 25 = 70; 100: 70 = 2.5 mm.: 1.75 mm. Line (3) Kilos. per minute are computed from tons per 24 hours by multiplying by 0.631; thus 30 tons times 0.631 = 18.93 kilos per minute. We discard the 3 as too small to save and have 18.9. Line (4) The currents in millimeters per second are taken direct from Table 638. We only consider the velocities of the quartz or gangue, the heavy mineral takes care of itself. Line (5) is obtained by multiplying line (4) by 60 to convert seconds into minutes. Line (6) Liters of sand are obtained by assuming the ore to be wholly quartz and then dividing the kilograms of line (3) by 2.64, the specific gravity of quartz. This gives the liters of sand. The error due to assumption is all upon the safe side. Line (7) Water liters per minute. We assume that the feed will have 4 times as much water as ore by weight, and that the rising water for any given sorting column will be 3 volumes of water to 1 volume of sand. We therefore multiply the liters sand per minute by 3 and get the liters of rising water per minute for each sorting column. Line (8) Total liters is obtained by adding line (6) to line (7). Line (9) Area in square millimeters needed in the section of the sorting column is obtained by dividing line (8) by line (5) and multiplying by 1,000,000. Line (10) The exact diameter

of cylinder that will have the area given in line (9) is found in Table 638. These sizes give the velocities and quantities for the treatment. Line (11) gives the commercial size of pipe corresponding to the cylinders of line (10), allowing a little increase in diameter for friction. Line (12) gives the carrying currents rising in the pockets. They are computed from lines (6), (7), and (8). For the first we add 276.3 to 21.45 and subtract 7.15, giving 290.60; for the second we add 290.60 to 17.94 and subtract 5.98, giving 302.56; and so on for the third, fourth, and overflow. This is liters rising. Line (13) To get the area of pockets in which line (12) liters are to rise at desired velocity, we divide line (12) by line (5), getting square millimeter area. Line (14) Transform square millimeters of line (13) to square inches of line (14) by dividing the former by 645. This gives square inches area of pockets. Line (15) Extract the square roots of line (14) and we have the length and width of the pockets. The numbers adopted, 7½, 8¾, 11, and 16¾, are in simple fractions to aid the carpenter work. These pockets will give the desired rising currents. Line (16) gives approximate heights or columns of water that are acting to force water out of the spigots. These values are dependent upon the depth of water on the spigot orifice. Line (17) gives velocity in millimeters per second of body falling freely in vacuum due to those heights. Line (18) Velocity in millimeters per minute obtained by multiplying line (17) by 60. Line (19) gives sizes of spigots assumed. Line (20) gives areas of section of spigot orifices, from Table 638. Line (21) gives liters of water and sand per minute from spigots obtained by multiplying line (20) by line (18) and dividing by 1,000,000. Line (22) gives liters of water per minute obtained by subtracting line (6) from line (21). Line (23) Gallons water per minute from the spigots obtained by multiplying line (22) by 0.26419. In the case of the overflow it is line (7) that is multiplied.

These final values of the gallons from the spigots are undoubtedly too high as no figures exist which allow for friction. The right figure may be ¾ or ⅔ of the figures arrived at above. The dimensions shown on Figs. 678*a* and *b* do not apply to the case in hand.

This classifier has the advantage that it can be built of any number of pockets, which may be built together or spaced at distances from one another to suit the mill design. The helical rising currents destroy local adverse currents.

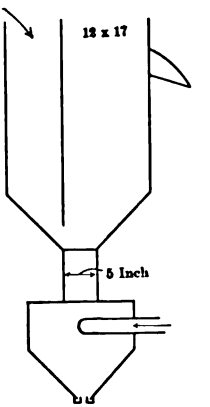

FIG. 680. — SINGLE-SPIGOT VORTEX CLASSIFIER WITH RECTANGULAR POCKET.

This classifier is extremely simple and at the same time systematic. The column and the pocket have the same rising current. There can be then no harmful accumulation of sand. When the spigot is pulled out one can see down straight through all the working parts for the removal of any obstruction.

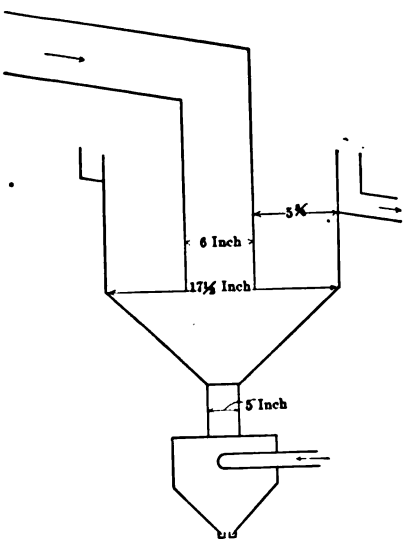

FIG. 681. — SINGLE-SPIGOT VORTEX CLASSIFIER WITH CYLINDRICAL POCKET.

The first two spigots can go to jigs, the last two to Wilfley tables, the overflow to Callow water cones and thence to vanners.

§ 1123. SINGLE-SPIGOT VORTEX CLASSIFIER. — A single-spigot vortex classifier may be used for separating fines from sand, and may have for the pocket either the cone and cylinder form shown in Fig. 681 or the rectangular spitzlutte form as shown in Fig. 680. In order to further illustrate the method of computing a classifier we will start with a classifier of given size

and compute its capacity. Fig. 680 with vortex and sorting column 5 inches in diameter and pocket 12 × 17 inches has about the same sized pocket as Fig. 681 with its 6-inch feed pipe and outer cylinder 17½ inches in diameter. The rectangular pocket has an area of 204 square inches or 131,600 square millimeters, while the cylindrical pocket has an area of 132,542 square millimeters. Let us suppose that we have a batch of sand 0.3 to 0 millimeter in size and we wish to divide it on 0.125 millimeter grain, sending 0.3 to 0.125-millimeter size to Wilfley table and 0.125- to 0-millimeter size to a vanner. How much can we treat and how much feed water and wash water must we use?

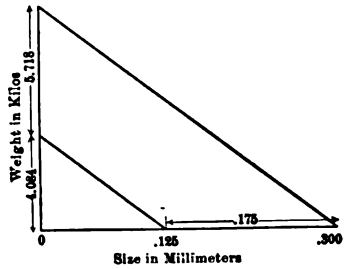

FIG. 682.—TRIANGLE OF SIZES AND WEIGHTS.

The required rising current must first be determined. From Table 638 we find this to be 11.4 millimeters per second or 684 millimeters per minute.

In the sorting column we can then have 684 times 12,668 cubic millimeters = 8.665 liters per minute, of which ¼ or 2.166 liters can be sand, and ¾ or 6.499 liters can be water. 2.166 liters ore equals 5.718 kilograms, supposing it to be all quartz with specific gravity 2.64. Then we have from the triangle (Fig. 682), 0.175 : 5.718 = 0.125 : 4.084. This is the weight in kilograms or 1.547 dry liters of fine pulp in the overflow per minute.

In the pocket we have 684 times 132,542 cubic millimeters = 90.589 liters per minute. This is composed of

1.547 liters dry pulp.	5.718 kg. minute spigot dry sand.
6.499 liters rising water.	4.084 kg. minute overflow sand.
82.543 liters feed water.	9.802
90.589	

We have therefore the final quantities as shown in Table 480.

TABLE 480. — COMPUTATION OF SINGLE-SPIGOT VORTEX CLASSIFIER.

	Feed.	Spigot.	Overflow.
Tons sand, 24 hours	16.53	9.061	7.471
Kilos, sand per minute	9.802	5.718	4.084
Tons feed water, 24 hours	130.8		
Liters per minute, feed water	82.54		
Tons hydraulic water, 24 hours	10.3		
Liters " " per minute	6.499		
Total water per 24 hours, tons	151.4	10.3	141.1
" " " minute, liters	95.541	6.499	89.042

§ 1124. TANK VORTEX CLASSIFIER.—The tank vortex classifier was evolved from the pocket vortex. It gets rid entirely of the usual individual pockets by having all the spigots discharge out of a tank which is in the nature of one big pocket. In the bottom of this the sand has a systematic progressive movement towards the fine end without any banks or deposits. Every grain, therefore, is in motion until its destination is determined.

The classifier consists (see Figs. 683*a* and *b*) of pressure boxes of the vortex type, *p p p*; sorting columns, *c c c*; adaptors, *d d d*, of nearly uniform area of section all the way up; of perforated plates, *e e e*, acting as secondary sorting columns; and a tank with sloping bottom, sides, and ends *f*. The feed pulp comes in at *a*, and is deflected downwards by the baffle *k*. It is then subjected to the successive rising currents with diminishing velocities, while it hops along

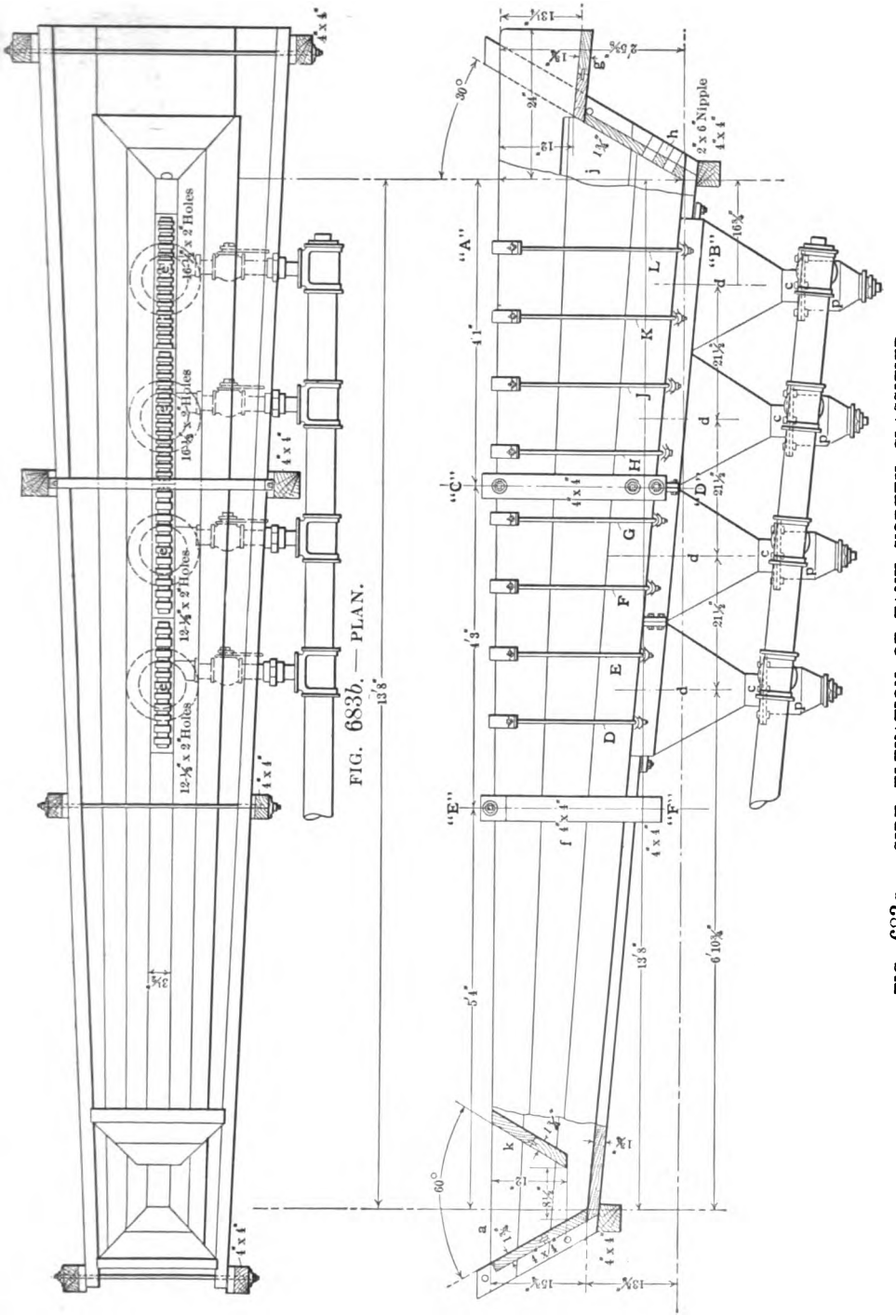

FIG. 683*b*. — PLAN.

FIG. 683*a*. — SIDE ELEVATION OF TANK VORTEX CLASSIFIER.

the bottom, parting with coarser grains as it goes, till the lowest point is reached, by which time all the sands that are coarser than the overflow should have been taken out.

The area of the section *j* is important. It should be of such a size that the sum of feed water and all the rising waters will have a velocity sufficient to carry up all the grains destined for the overflow and deliver them through the spout *g*. A safety spigot *h* is provided but it need only be used when the mill man finds he uses less feed water than the computed amount. When this happens a bank is liable to be formed of the grains that are too light to go down in the last spigot and too heavy to go over into the overflow. This condition is at once relieved by pulling the plug in the safety spigot. This product ranks as overflow and therefore joins that stream. The author has found still another use of the safety spigot. It may have a 2-inch pipe with cock connecting with the overflow. By opening this more, the overflow is made to include coarser grains and the whole set of sizes moved along, making all grades coarser. By shutting down this water, on the other hand, the overflow can be made finer and all the grades finer. This scheme gives a very perfect and easy regulation.

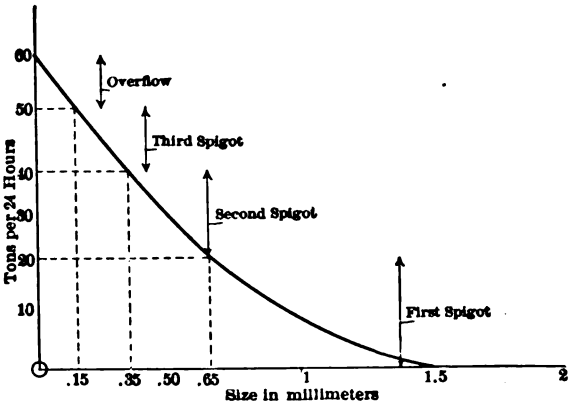

FIG. 684. — CURVE SHOWING RELATION OF SIZE TO TONNAGE.

The computation is similar to that of the pocket vortex classifier except that the tank is computed only once instead of being computed separately for each pocket.

Let us assume that we have 60 tons per 24 hours of stamp stuff to treat, that the product ranges from 1½ millimeters down to 0 millimeter, and that we find by sizing test that 10 tons per 24 hours will go through 0.15-millimeter screen. We consider this 0.15 millimeter to 0 size satisfactory for the overflow. There are to be three spigots. Then the computation will be as shown in Table 481. The curve (Fig. 684) shows the relation of sizes to tonnages.

TABLE 481. — COMPUTATION FOR TANK VORTEX CLASSIFIER.

	Feed.	1st Spigot.	2d Spigot.	3d Spigot.	Overflow.
1. Tons, 24 hours	60	21.0	16.3	12.7	10
2. Sand sizes, millimeter	1.5–0	1.5–0.65	0.65–0.35	0.35–0.15	0.15–0
3. Kilograms, sand, minute	37.9	13.3	10.3	8.00	6.3
4. Currents, millimeter second	.....	54.9	39.52	16.45	.....
5. " " minute	.....	3,294.0	2,371.20	987.00	.....
6. Liters sand per minute	14.34	5.02	3.90	3.03	2.30
7. Liters water per minute	151.60	15.06	11.70	9.09	187.45
8. Total liters water and sand	165.94	20.08	15.60	12.12	189.84
9. Area, square millimeter	.....	6,096	6,579	12,280	.....
10. Size of pipe, theoretical diameter, inches	.....	3½	3½	5	.....
11. Mill sizes, inches	.....	3½	4	5	.....
12. Carrying current, liters, ore and water, minute	.....	175.98	183.78	189.84	.....
13. Section J, square millimeter area	.....	.....	.....	192,350.	.....
14. " J, square inch area	.....	.....	.....	298.2	.....

The spigots are computed as in the vortex pocket classifier. The sizes that

would probably result would be ½ inch for the first and ⅜ for the other two spigots.

This classifier would treat the pulp from 20 stamps crushing 3 tons each, and be best served by six Wilfley tables, one or two Callow cones, and two Johnston vanners for the slimes.

Tubular Free-Settling Classifiers.

§ 1125. The Double-Cone Hydraulic Classifier [12] is touched upon in Vol. I., page 426, but this type has since then been altered somewhat and Fig. 685 shows the type as now manufactured by the Colorado Iron Works Company. The pulp is delivered to the top of the inner cone of the classifier and passes down and out the opening *M*, where it encounters a rising current of water which enters through the dial cock *E*. The water passes through the chamber *K* and up through the annular space *C*. The water is so adjusted that a head is maintained in the inner cone above the level of the overflow. The fines pass upward and overflow into the peripheral launder and thence by spout *D* to the settling tanks. The heavy portion of the pulp falls into space *K*, where it is drawn off through the opening *H*.

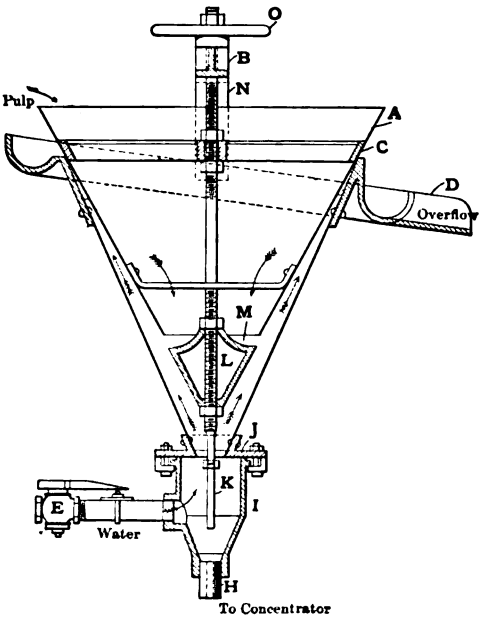

FIG. 685. — COLORADO IRON WORKS CONE CLASSIFIER.

Regulation is secured by raising or lowering the inner cone *A*, as well as the valve *L*, and by changing the water quantity by the valve *E*.

When more than two products are desired, the flow is adjusted to carry the finer sands over into the overflow. This overflow may then be treated in other classifiers of larger size. This classifier can be operated without added water being used, if the pulp carries sufficient water, and proper adjustments are made to openings *M* and *C*, so that a head is maintained in the inner cone *A*.

The capacity varies with the size of the classifier, size of product, and closeness of separation required. The size of the product determines the size of the classifier used, the number of cones being increased for large capacities.

The classifier is made in five sizes as shown in Table 482. It has been proved that 50-inch cones are rarely necessary and owing to the coarseness of product produced the 12-inch cone finds small application.

TABLE 482. — COLORADO IRON WORKS COMPANY CONE CLASSIFIERS.

Diameter in Inches of Inner Cone.	Product, Mesh.	Weight, Pounds.
12	8 to 20	275
20	20 " 30	450
30	30 " 40	500
40	40 " 60	700
50	60 and finer	1,000

§ 1126. THE SPITZLUTTEN, made by the Fried. Krupp Grusonwerk,[33] consist of a V-shaped box of sheet steel wherein the velocity of the ascending and descending streams of pulp are regulated by means of a vertically sliding second V-shaped steel box.

The pressure box formed of two planed sections is made of cast iron, provided laterally with pipes for the supply of hydraulic water, and at the lowest point with a discharge pipe for the sands. The outlet sectional area of the pipe is widened and narrowed by nozzles of different diameter for regulating the discharged quantity. The sands may be discharged on the right or left (see Fig. 686).

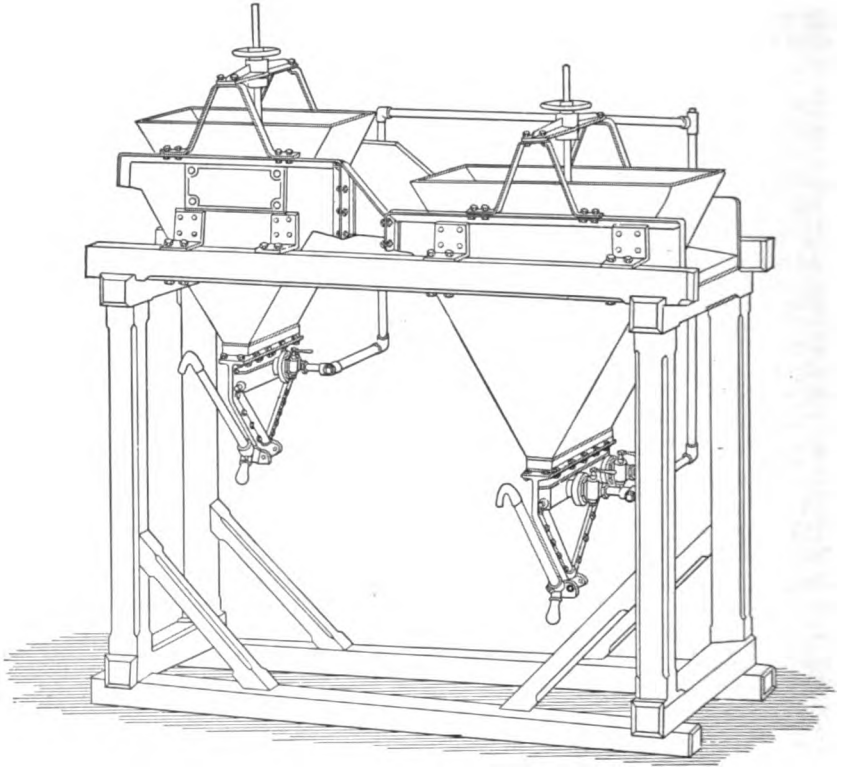

FIG. 686. — FRIED. KRUPP SPITZLUTTEN.

§ 1127. THE RICHARDS ANNULAR VORTEX CLASSIFIER, made by Allis-Chalmers Company, has lately been improved and is now made in the two forms, Figs. 687 and 688. The first is for larger grains, the second is for smaller grains with a large quantity of water.

The computation of this classifier (Fig. 687) is very simple as there is only one pocket to be computed. In the first case, let us suppose we have 250 tons per 24 hours of 8 to 0-millimeter stuff and we wish to divide on 2½ millimeters, making a spigot product from 8 to 2½ millimeters and an overflow product from 2½ to 0 millimeters. These figures refer to the quartz and our computation will be as shown in Table 483.

TABLE 483. — COMPUTATION OF RICHARDS' ANNULAR VORTEX CLASSIFIER FORM OF FIG. 687.

	Feed.	Spigot.	Overflow.
1. Tons, 24 hours	250	172	78
2. Sand sizes, millimeters	8–0	8–2½	2½–0
3. Kilograms sand, minute	157.9	108.7	49.2
4. Currents, millimeter, second	.....	172	.....
5. " " minute	.....	10,320	10,320
6. Liters sand, minute	59.8	41.2	18.6
7. Water liters, minute	631.6	123.6	755.2
8. Total water and sand, liters	691.4	164.8	773.8
9. Area, section of sorting column, square millimeters	.....	15,970	.....
10. Area of section of sorting column in standard 13–11½-inch classifier	.....	18,619	.....
11. Area of pocket, square millimeter	.....	.....	74,970
12. Area of pocket of 13–7.3-inch classifier	.....	.....	58,999

The 3-inch classifier having an annular space between circles of 13 and 11½ inch diameter figures out a little large for its sorting column and the pocket 13 × 7.3 inch a little small for this, but it is probable that this classifier would separate the Hancock jig feed 8 to 2½ millimeters from ordinary classifier feed 2½ to 0 millimeters. The latter could be dewatered by Callow water cones and sent to a classifier yielding four spigot products and overflow. The first and second spigot products would go to jigs, the third and fourth to Wilfley tables, and the overflow to Callow water cones and then to vanners.

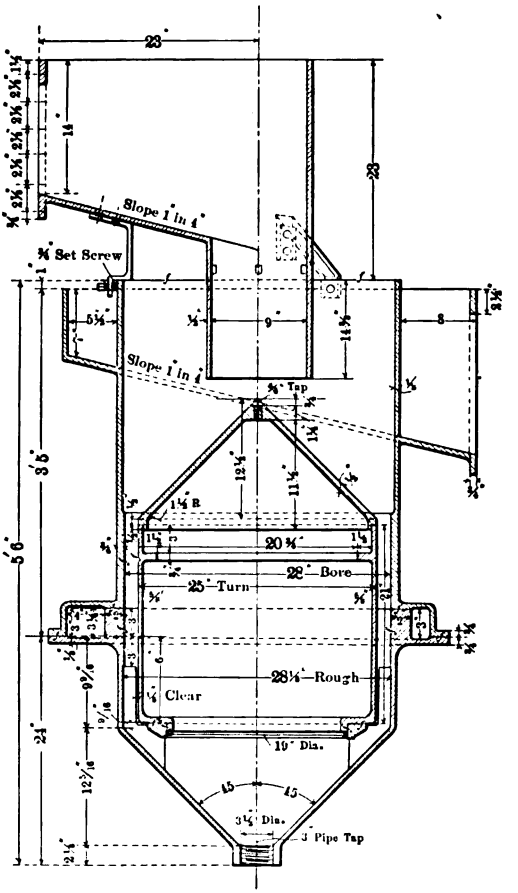

FIG. 687. — RICHARDS' ANNULAR VORTEX CLASSIFIER FOR COARSE GRAINS.

The computation of the annular vortex classifier (Fig. 688) is much the same as the other. The chief difference between the two is in the smaller size of the ore, the smaller size of grain on which the division is made, and the larger quantity of water. Suppose that in a stamp mill the stamps are crushing 60 tons per 24 hours through 1.5 millimeters, using 7 tons of water per ton of ore, and that we wish to treat this pulp, sending 1.5 to 1-millimeter material into the spigot product and 0.1 to 0-millimeter material into the overflow. There will be something like 15 tons a day of the fine stuff. Then we have the computed results as shown in Table 484.

TABLE 484. — COMPUTATION OF ANNULAR VORTEX CLASSIFIER OF FIG. 688.

	Feed.	Spigot.	Overflow.
1. Tons, 24 hours	60	45	15
2. Sand sizes millimeter	1.5–0	1.5–0.1	0.1–0
3. Kilograms, minute	38	28.5	9.5
4. Currents, millimeter, second	.....	6.5	.....
5. " " minute	.....	390.0	.....
6. Liters, sand, minute	14.4	10.8	3.6
7. Liters, water, "	266	32.4	293.4
8. Total liters sand and water	280.4	43.2	302
9. Area of sorting column, square millimeters	.....	110,770	774,300
10. Diameters 20 inches to 13 inches, sorting column	.....	117,051	.....
11. Diameters 41¾ inches to 14½ inches, pocket	.....	.....	776,689

The sorting column would be 20 inches outside and 13 inches inside diameter. The annular pocket would be 41¾ inches outside diameter and 14½ inches inside diameter. This sorting column would conform to the standard 20-inch size of the makers, but would have an annular space 3½ inches wide, which is wider than generally used; 38 and 35 inches for the outer and inner diameters of the annular space of sorting column would give 110,961 square millimeter area, and would have an annular sorting column only 1½ inches wide. Of the pocket dimensions, 14½ inches conforms to standard 20-inch machine, but 41¾ inches would have to be built.

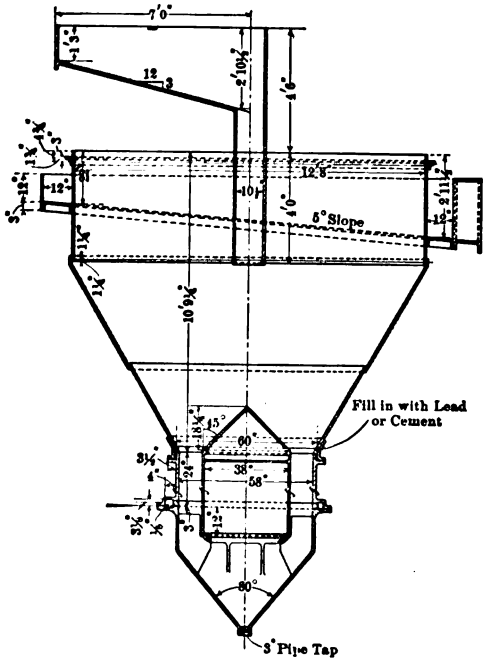

FIG. 688. — RICHARDS' ANNULAR VORTEX CLASSIFIER FOR FINE GRAINS.

This classifier could take stamp pulp and send 1½ to 0.1-millimeter stuff to percolating vats or tube mills and 0.1 to 0-millimeter stuff to agitators for cyaniding.

SHALLOW-POCKET HINDERED-SETTLING CLASSIFIERS.

§ 1128. RICHARDS' SHALLOW-POCKET HINDERED-SETTLING CLASSIFIER (Figs. 689*a*, *b*, and *c*), show the Richards Shallow-Pocket Hindering-Settling Classifier made by Allis-Chalmers Company, arranged to give five spigot products and overflow. The trough (1) is provided with transverse slots (2) opening below boxes (3) which act similarly to the hutches of a jig. The bottom of the slots (2) is covered with punched steel plate. The slots themselves are successively wider as we go from the feed end toward the opposite end. Directly in front of each of these slots is a riffle cleat (4). Hydraulic water is admitted through the pipe (5) and rises in the hutch and through the perforated plate. The effect of this is to give a quicksand bed in each of the little pockets (2). The particles which can settle against the rising current do so and pass out through the spigots (6). A baffle board (7) is provided at the feed end of the classifier, also a baffle (8) in each hutch to insure equal rising current over the entire width of the perforated plate.

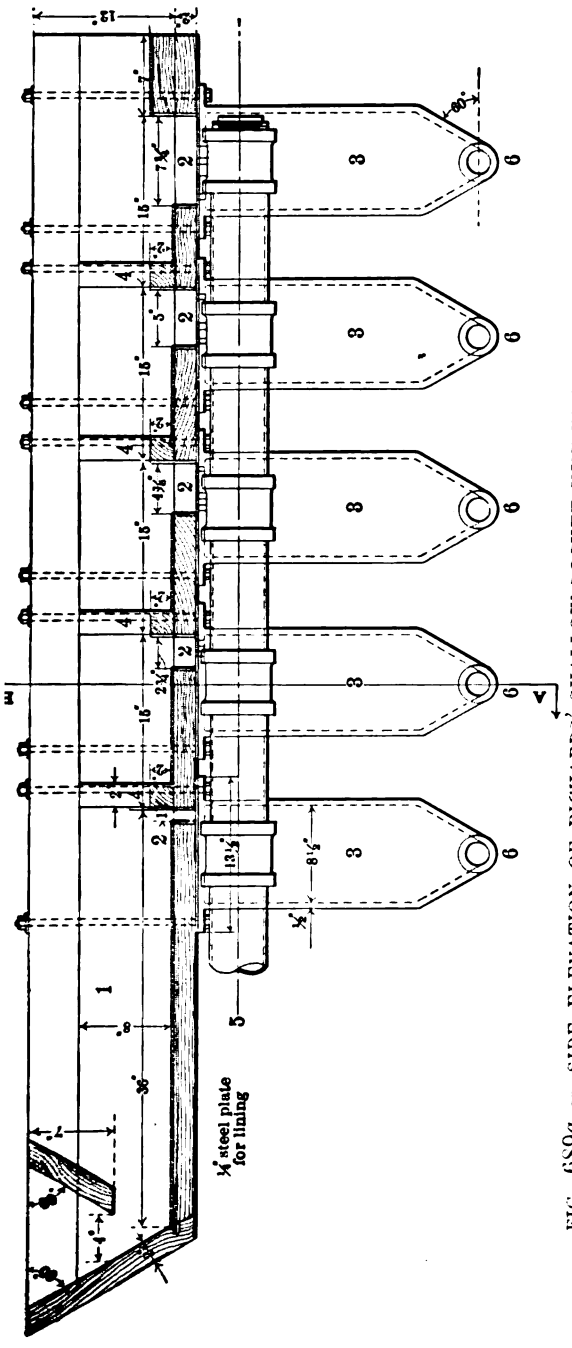

FIG. 689a. — SIDE ELEVATION OF RICHARDS' SHALLOW-POCKET HINDERED-SETTLING CLASSIFIER.

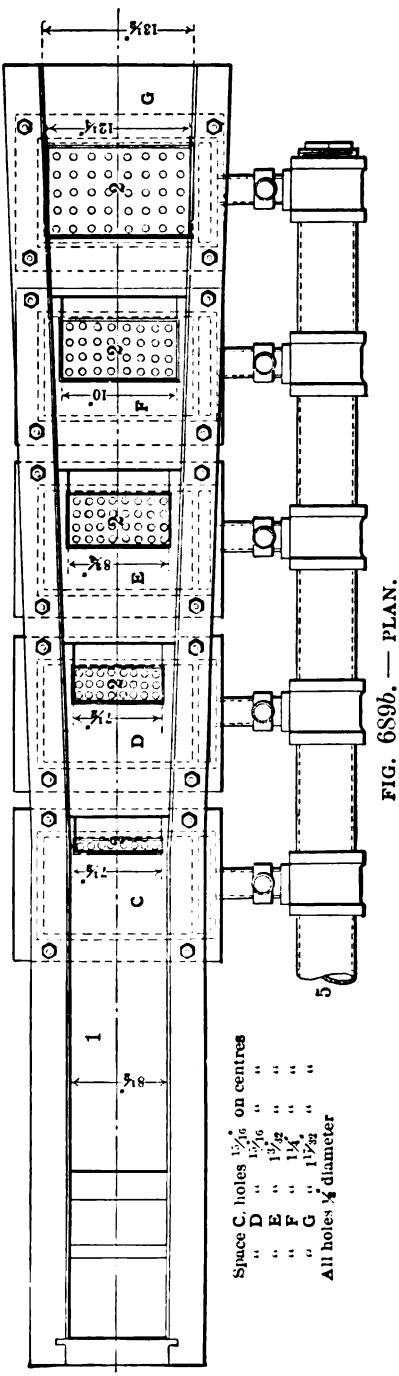

FIG. 689b. — PLAN.

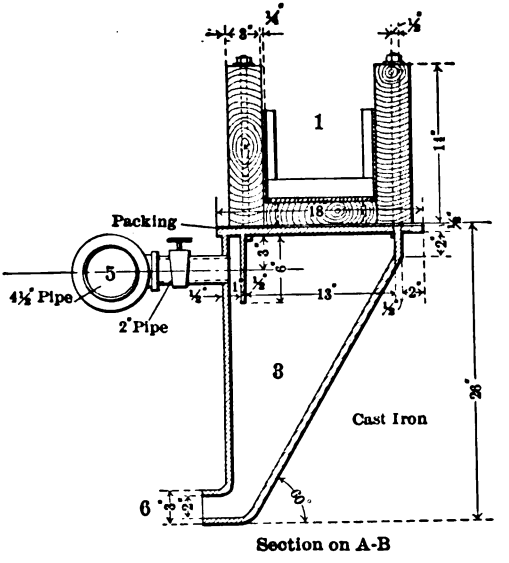

FIG. 689c. — CROSS-SECTION.

§ 1129. RICHARDS' UNDERCURRENT.[31] — The Richards undercurrent is essentially a hydraulic classifier of the type just described, applied to a sluice. It consists of a pit, *a* (Fig. 690), between the riffle blocks of the sluice, at the bottom of which is a screen plate *b*, with punched holes ¼ inch in diameter. Over this is to be laid rounded pebbles about the size of a hen's egg, which will take the blows of the boulders rolling over the top and prevent them from settling into the pit and wearing out the screen. These pebbles can come up to the level of the top of the riffles. Under the screen is a space *c*, which acts like the hutch of a jig, up which water to a limited extent is brought to pass through the screen. The wash water is introduced from a pipe *d* in a sepa-

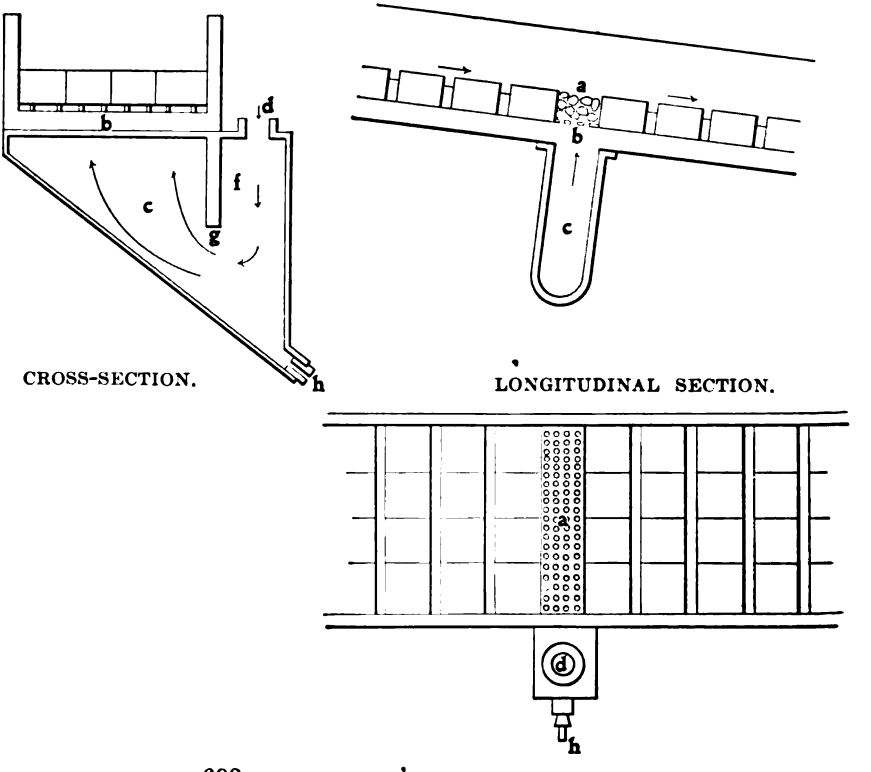

FIG. 690. — RICHARDS' UNDERCURRENT. PLAN.

rate side compartment, and between its portion of the hutch *f* and the space *c* is a vertical partition *g*, running part way down to force an equal rising current to all parts of the screen *a*. A spigot *h* is provided for discharging the sand as fast as it comes into the hutch. The bottom of this hutch has a steep slope, as much as 60°, to give a free discharge of the heavy sands.

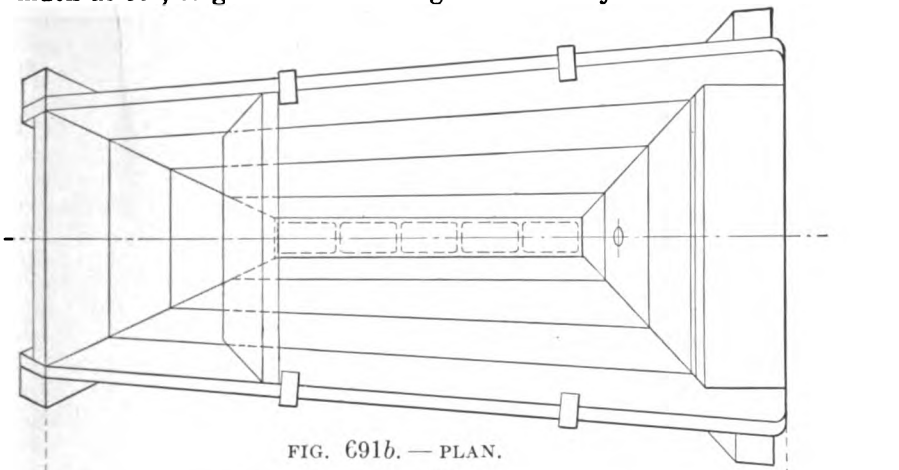

FIG. 691*b*. — PLAN.

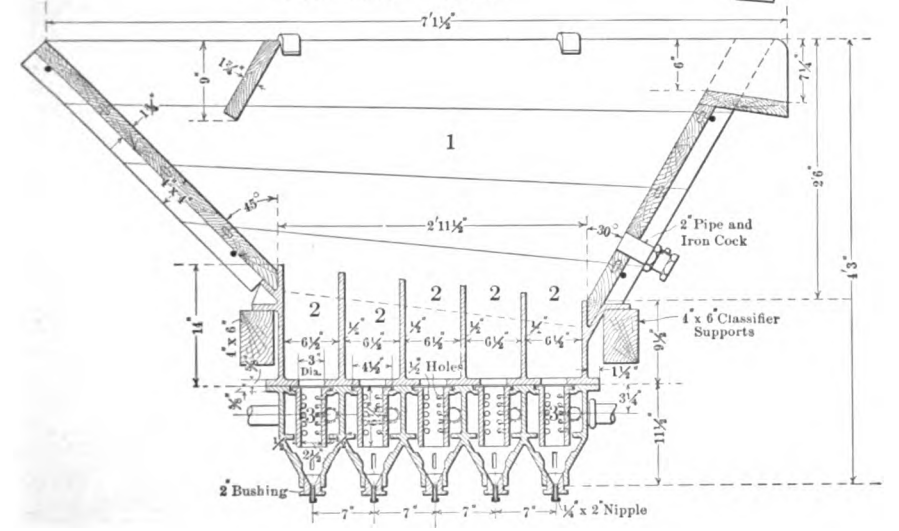

FIG. 691*a*. — LONGITUDINAL SECTION SHANNON CLASSIFIER.

Deep-Pocket Hindered-Settling Classifiers.

§ 1130. Hindered-Settling Classifier. — The hindered-settling classifier is to be had in a number of designs, only one of which is given here.

Figs. 691*a*, *b*, and *c* show the improved Shannon Classifier as made by Allis-Chalmers Company.

This hindered-settling classifier divides the work of classification into three parts; the work done in the pocket, the work done in the quicksand chamber, and that done in the sorting column.

The rough work is done in the pocket (1), the fine work is mainly done in

the quicksand chambers (2) where hindered-settling quicksand conditions prevail, while the sorting columns (3) below have less area of section than the last and in them the final cleaning is done. The sorting column is preferably made long vertically, and with a helical rising current obtained by admitting tangential streams of water all along the height of the column. The pressure box in this design is placed all around the sorting column and the product is delivered beneath in the cone leading to the spigot. It sometimes happens in the fine sizes that the pulp forms a solid wall in the hindered-settling chamber. To avoid this, the jets in the walls of the sorting column are made radial.

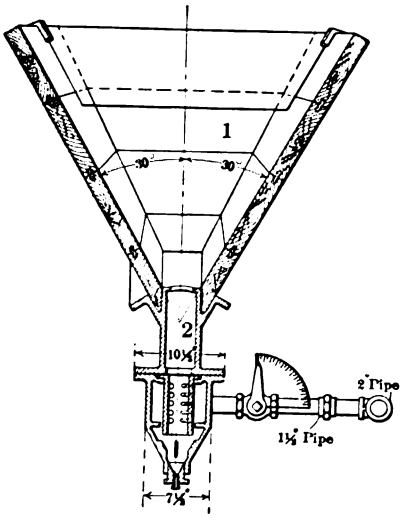

FIG. 691*c*. — CROSS-SECTION.

The classifier looks somewhat complicated, but it is really not so. The castings composing it require but little machine work, the way through it is large, free, and open so that no choking or obstruction is likely to occur. It is very easily regulated and gives a beautiful set of classified products well adapted for Wilfley table and vanner work.

The computation for this classifier is exactly like that of the pocket vortex classifier described in § 1122, taking into account only the tank above and the sorting column below. The sorting column is figured as if it were acting by free settling.

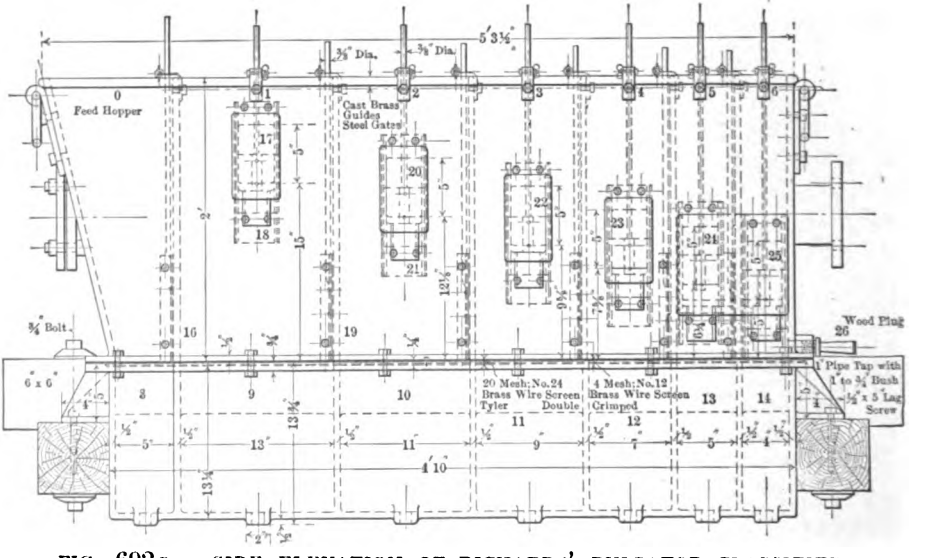
Feed Hopper
Cast Brass Gulded Steel Gates
20 Mesh: No.24 Brass Wire Screen Tyler Double
4 Mesh: No.12 Brass Wire Screen Crimped
Wood Plug
Pipe Tap with 1 to ¾" Bush
¾" Bolt
6 x 6"

FIG. 692*a*. — SIDE ELEVATION OF RICHARDS' PULSATOR CLASSIFIER.

§ 1131. RICHARDS' PULSATOR CLASSIFIER. — The Richards Pulsator Classifier while acting by hindered settling differs widely from any of the devices heretofore described.

Figs. 692*a*, *b*, and *c* show the usual inverted form of the pulsator classifier

as made by the Denver Engineering Works Company. The classifier consists of a feed hopper (0) and six treatment pockets (1), (2), (3), (4), (5), and (6). The bottom of the feed hopper and the six treatment pockets is a screen (7)

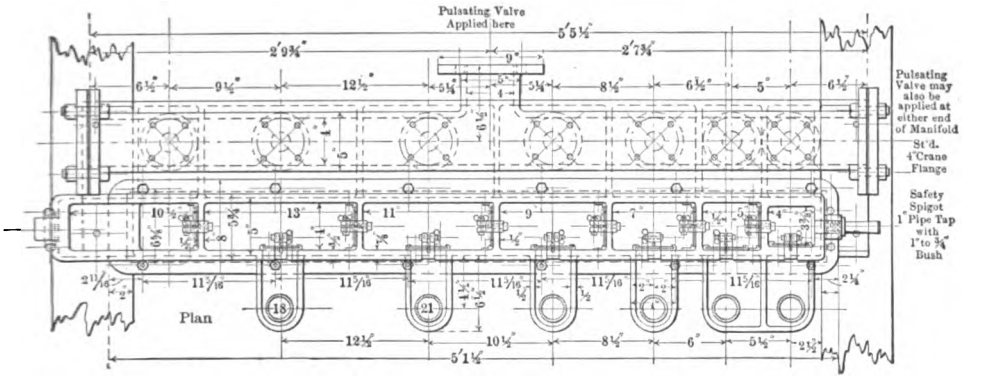
Pulsating Valve Applied here
Pulsating Valve may also be applied at either end of Manifold
St'd. 4" Crane Flange
Safety Spigot 1" Pipe Tap with 1" to ¾" Bush
Plan

FIG. 692*b*. — PLAN.

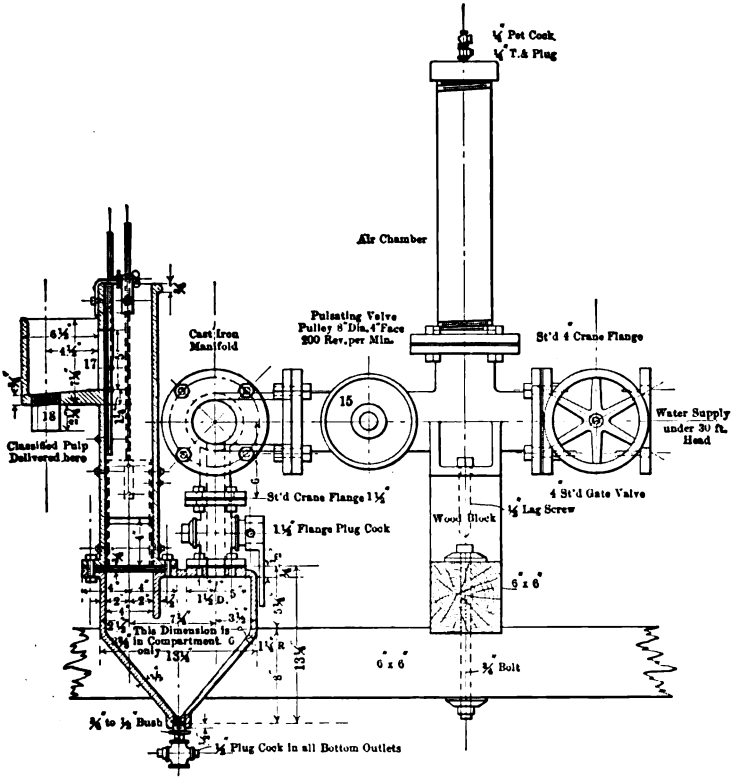
¼" Pet Cock
¼" T.& Plug
Air Chamber
Cast Iron Manifold
Pulsating Valve Pulley 8" Dia. 4" Face 200 Rev. per Min.
St'd 4" Crane Flange
Water Supply under 30 ft. Head
Classified Pulp Delivered here
St'd Crane Flange 1½"
1½" Flange Plug Cock
4" St'd Gate Valve
Wood Block
½" Lag Screw
This Dimension is ¾" in Compartment C only
6 x 6
⅝" Bolt
⅜" to ½" Bush
½" Plug Cock in all Bottom Outlets

FIG. 692*c*. — SECTIONAL END ELEVATION.

of two layers, one coarse mesh for strength, the other fine for size of hole. An intermittent rising current is admitted to the hutch or pressure boxes (8), (9), (10), (11), (12), (13), and (14) through the revolving cock (15). The ore is introduced at (0) and falls immediately to the screen level where it encounters

the rising pulsating current of water. This serves to agitate the ore, get it in partial suspension, and prevent clogging of the feed hopper. From the feed hopper (0) the ore passes below the gate (16) where it encounters and is subject to the action of the slowly rising, pulsating current of water in (1). This current further agitates the ore and raises to the discharge opening (17) the finest particles in the ore, whence they are discharged at (18). Through the gate (19) the ore passes from classifying compartment (1) on the screen (7) to classifying compartment (2) where it encounters a more swiftly rising, pulsating current and the next heavier grade of sands is lifted to the discharge opening (20) and discharged at (21). This process is repeated successively in pockets (3), (4), (5), and (6). In the latter compartment only the heaviest particles will have been left in the ore bed and these are discharged from (25). In cases where the ore contains particularly heavy particles which the current in the last pocket is unable to lift to the discharge (25), the plug (26) may be removed from its spigot. The discharge from this spigot may be made finished concentrates. To do this, however, requires constant attention, and it is far better to send the product directly to a jig for final cleaning up.

.The openings (17), (21), (22), (23), (24), and (25) are the only discharge openings in the machine, and (17) is considerably higher than (25). Hence the water in the machine tends to flow toward (25) washing the ore along the screen (7) to the final discharge (25) or (26) as the case may be. Gates are provided for varying the height of the discharge openings within wide limits. These discharge openings may in some cases require adjustment until they are almost in a horizontal line. With heavy ores, 2.5 to 0 millimeters in size, it is customary to have (17) 15 to 16 inches above the screen (7), and (25) about 5 inches, with the other openings on the diagonal line between. When treating ores 1.5 to 1 millimeter maximum grain, not heavily charged with mineral, (25) may be 10 inches more or less, and (17) 15 inches more or less, above the screen. By observing this adjustment, the difficulty of keeping fines out of the last discharges is greatly reduced. Properly adjusted, this classifier will discharge all the fines in the ore from the first two discharge openings, (17) and (21).

The sieve (7) serves to support the bed of ore and has no part in the classification. Particles of free mineral of sufficient size to settle against the classifying current in the first one or two compartments, but finer than the mesh of (7), may occur in the feed, in which event they will sink to the bottom of the hutch, whence they may be drawn off as rich concentrates through the spigots shown. This, however, will rarely occur and, in general, the hutch need not be drained more often than once a day. It is considered wise to prevent the formation of hutch product as much as possible.

The number of overflow or discharge openings in this classifier is six. The first and second overflow products are fines and the last overflow consists of a mixture of the heaviest ore particles in a true classified product.

This classifier is built in several sizes as shown in Table 485.

TABLE 485. — SIZES, CAPACITIES, ETC., RICHARDS' PULSATOR CLASSIFIER.

Type.	Size. Inches.	Number of Compartmens.	Approximate Capacity in Tons per 24 Hours.*	Dimensions Approximate Only.				Diameter Pulley. Inches.
				Length. Inches.	Height. Inches.	Width. Inches.	Pulley Face. Inches.	
Direct	2	6	40	51	30	21	1½	8
Inverted	2	6	40	37	31	19	1½	8
Inverted	3	6	100	53	35	21	3	8
Inverted	4	6	175	70½	38	22¾	4	8

* With pulp at a consistency of 3 parts water to 1 of ore by volume. Ore crushed to pass 2 mm.

The advantages of the pulsator classifier are: 1. A minimum dilution of slime. The slimes are diluted with the water rising in two pockets only. 2. The intermediate and coarse overflow products possess the advantages of hindered-settling ratio and are at the same time free from fine mineral which would contaminate the tailings of the fine concentrators. 3. The machine has low water consumption.

§ 1132. *The Richards Pulsator Classifier* is also made in a form known as the direct, in distinction from the inverted form just described. This classifier is made upon the same principle as the pulsator jig and is suited for low capacities, testing laboratories, etc. It is capable of quicker adjustment than is the inverted form, but dilutes the slimes with all the rising water. For a description of this type, the reader is referred to the description of the pulsator jig in a later chapter. (See also Table 485.)

§ 1133. *Tests on Richards Pulsator.* — Very complete tests of the Richards Pulsator Classifier have been made at Mill 162.[34] Table 486 gives the result of a fourteen-day test.

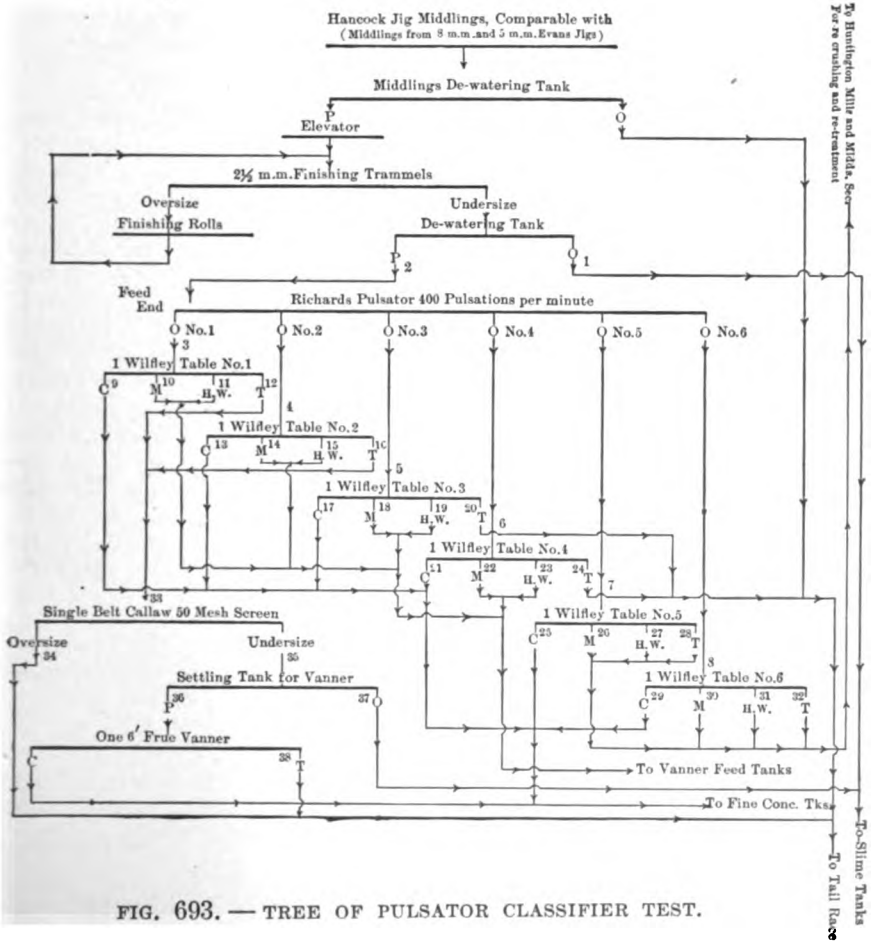

FIG. 693. — TREE OF PULSATOR CLASSIFIER TEST.

A few explanations may be necessary for the better understanding of the table. The pulsator was fed with material which had passed a 2½-millimeter opening. The feed was first sent to a dewatering tank, the thickened pulp going to the pulsator (see Fig. 693). By means of Fig. 693 we may be able

TABLE 486. — BOSTON AND MONTANA CONSOLIDATED COPPER AND SILVER MINING COMPANY, GREAT FALLS, MONTANA. TREATMENT OF "THROUGH 2½ MM." MATERIAL FROM FINISHING TROMMELS BY RICHARDS' PULSATOR. INSTALLED IN SECTION NO. 1 OF THE CONCENTRATOR. FOURTEEN (14) DAY TEST MADE AUGUST 24–26, AUGUST 29–30, AND SEPTEMBER 1, 3–5, 7, 8, AND 10–12 INCLUSIVE, 1907.

Name of Sample.	Sample Number.	Rate per 24 Hours.		Grams per Gallon.	Specific Gravity.	Percent of					Assay.			Copper.		
						Water.			Solids.		Percent.			Pounds per 24 Hours.	Percent of	
		Gallons.	Pounds.			In Original Feed.	To Individual Machine.	In Individual Product.	In Original Feed.	To Individual Machine.	Copper.	Insoluble.	Iron.		In Original Feed.	To Individual Machine.
Through 2½ millimeter		107,866	255,993	1.077							1.35			3,465		
Overflow of tank	1	57,365	22,182	175	2.83	53.18	53.18	53.18	8.67	8.67	1.45			322	9.30	9.30
Plug discharge tank	2	50,501	233,811	2,100	2.87	46.82	46.82	46.82	91.33	91.33	1.34			3,143	90.70	90.70
Total		107,866	255,933	1.077		100.00	100.00	100.00	100.00	100.00	1.35			3,465	100.00	100.00
Feed to pulsator	2	50,501	233,811	2,100		46.82			91.33		1.34			3,143	90.70	
Overflow No. 1	3	25,629	39,444	698	2.85	23.76	50.75	12.72	15.41	16.87	1.46			574	16.57	18.27
" " 2	4	29,706	40,730	622	2.86	27.54	58.82	14.74	15.91	17.42	1.41			573	16.54	18.24
" " 3	5	37,581	34,885	421	2.90	34.84	74.42	18.64	13.62	14.92	1.18			413	11.92	13.15
" " 4	6	40,266	29,413	331	2.85	37.33	79.73	19.98	11.49	12.58	1.20			353	10.19	11.22
" " 5	7	32,856	31,073	429	3.04	30.46	65.06	16.30	12.14	13.29	1.20			373	10.76	11.86
" " 6	8	35,580	58,266	744	3.00	32.93	70.34	17.62	22.76	24.92	1.47			857	24.72	27.26
Total products		201,558	233,811	526		186.26	399.12	100.00	91.33	100.00				3,143	90.70	100.00
Feed Willfley No. 1	3	25,629	39,444	698	2.85	23.76			15.41		1.46			574	16.57	
Concentrates	9	1,661	3,850	1,051	4.04	1.54	6.48	4.56	1.50	9.76	8.73	27.8	27.2	336	9.70	58.66
Middlings	10	2,071	1,586	347	2.78	1.92	8.08	5.69	0.62	4.02	1.14			18	0.52	3.10
Head water	11	24,529	11,742	217	2.77	22.74	95.71	67.40	4.59	29.77	0.94			110	3.17	19.12
Tailings	12	8,133	22,266	1,242	2.73	7.54	31.73	22.35	8.70	56.45	0.49			110	3.18	19.12
Total products		36,394	39,444	491		33.74	142.00	100.00	15.41	100.00				574	16.57	100.00
Feed Willfley No. 2	4	29,706	40,730	622	2.86	27.54			15.91		1.41			573	16.54	
Concentrates	13	1,187	3,947	1,508	4.29	1.10	4.00	2.60	1.54	9.69	8.44	20.4	30.5	333	9.61	58.07
Middlings	14	1,079	2,716	1,142	2.86	1.00	3.63	2.36	1.06	6.67	1.62			44	1.27	7.65
Head water	15	31,475	9,918	143	2.77	29.18	105.95	68.97	3.88	24.35	0.99			98	2.83	17.14
Tailings	16	11,897	24,149	921	2.72	11.03	40.05	26.07	9.43	59.29	0.41			98	2.83	17.14
Total products		45,638	40,730	405		42.31	153.63	100.00	15.91	100.00				573	16.54	100.00
Feed Willfley No. 3	5	37,581	34,885	421	2.90	34.84			13.62		1.18			413	11.92	
Concentrates	17	842	3,764	2,028	4.24	0.78	2.24	1.57	1.47	10.79	6.38	21.0	32.1	240	6.93	58.02
Middlings	18	3,009	13,319	2,008	2.79	2.79	8.01	5.60	5.20	38.18	0.78			104	3.00	25.24
Head water	19	38,465	632	7	2.80	35.66	102.35	71.53	0.25	1.81	1.58			10	0.29	2.36
Tailings	20	11,455	17,170	680	2.72	10.62	30.48	21.30	6.70	49.22	0.34			59	1.70	14.38
Total products		53,771	34,885	294		49.85	143.08	100.00	13.62	100.00				413	11.92	100.00
Feed Willfley No. 4	6	40,266	29,413	331	2.85	37.33			11.49		1.20			353	10.10	
Concentrates	21	626	3,756	2,722	4.12	0.58	1.55	1.23	1.47	12.77	6.02	24.8	30.7	226	6.52	64.09
Middlings	22	2,988	10,254	2,467	2.76	2.77	7.42	5.85	6.35	55.26	0.55			89	2.57	25.14

TABLE 486. — *Continued.*

Name of Sample.	Sample Number.	Rate per 24 Hours.		Grams per Gallon.	Specific Gravity.	Percent of					Assay.			Copper.		
						Water.			Solids.		Percent.			Pounds per 24 Hours.	Percent of	
		Gallons.	Pounds.			In Original Feed.	To Individual Machine.	In Individual Product.	In Original Feed.	To Individual Machine.	Copper.	Insoluble.	Iron.		In Original Feed.	To Individual Machine.
Head water	23	35,984	220	3	2.82	33.36	89.37	70.47	0.08	0.75	1.69	.....	.....	4	0.12	1.10
Tailings	24	11,466	9,183	363	2.73	10.63	28.48	22.45	3.59	31.22	0.37	.....	.....	34	0.98	9.67
Total products	.....	51,064	29,413	261	.....	47.34	126.82	100.00	11 49	100.00	.....	.....	.....	353	10.19	100.00
Feed Wilfley No. 5	7	32,856	31,073	429	3.04	30.46	.....	.....	12.14	.....	1.20	.....	.....	373	10.76	.....
Concentrates	25	1,758	4,158	1,073	4.03	1.63	5.35	3.90	1.62	13.38	5.72	27.2	29.8	238	6.87	63.94
Middlings	26	1,920	7,259	1,715	2.79	1.78	5.85	4.26	2.84	23.36	0.72	.....	.....	52	1.50	13.81
Head water	27	33,827	96	1	.....	31.36	102.96	75.04	0.04	0.31	1.67	.....	.....	2	0.06	0.51
Tailings	28	7,572	10,560	1,172	2.75	7.02	23.04	16.80	7.64	62.95	0.41	.....	.....	81	2.33	21.74
Total products	.....	45,077	31,073	313	.....	41.79	137.20	100.00	12.14	100.00	.....	.....	.....	373	10.76	100.00
Feed Wilfley No. 6	8	35,520	58,266	744	3.00	32.93	.....	.....	22.76	.....	1.47	.....	.....	857	24.73	.....
Concentrates	29	1,046	9,789	4,245	3.88	0.97	2.94	2.12	3.82	16.80	5.55	34.6	26.5	543	15.67	63.33
Middlings	30	3,387	15,248	2,042	2.89	3.14	9.54	6.86	5.96	26.17	0.96	.....	.....	147	4.24	17.21
Head water	31	34,172	76	1	.....	31.68	96.20	69.20	0.03	0.13	1.00	.....	.....	1	0.03	0.11
Tailings	32	10,776	33,153	1,395	2.77	9.99	30.34	21.82	12.95	56.90	0.50	.....	.....	166	4.79	19.35
Total products	.....	49,381	58,266	535	.....	45.78	139.02	100.00	22.76	100.00	.....	.....	.....	857	24 73	100.00
Feed callow screen	33	20,030	46,415	1,050	2.73	18.59	.....	.....	18.13	.....	0.45	.....	.....	208	6.00	.....
Oversize	34	24,102	27,663	519	2.71	22.40	120.03	46.13	10.81	59.60	0.32	.....	.....	88	2.54	42.67
Undersize	35	28,218	18,752	301	2.75	26.16	140.88	53.87	7.32	40.40	0.64	.....	.....	120	3.46	57.33
Total products	.....	52,380	46,415	402	.....	48.56	261.51	100.00	18.13	100.00	.....	.....	.....	208	6.00	100.00
Feed settling tank	35	28,218	18,752	301	2.75	26.16	.....	.....	7.32	.....	0.64	.....	.....	120	3.46	.....
Overflow	37	22,817	651	13	2.79	21.15	80.86	80.86	0.25	3.47	1.08	.....	.....	7	0.20	5.69
Plug discharge	36	5,401	18,101	1,520	2.75	5.01	19.14	19.14	7.07	96.53	0.62	.....	.....	113	3.26	94.31
Total products	.....	28,218	18,752	301	.....	26.16	100.00	100.00	7.32	100.00	.....	.....	.....	120	3.46	100.00
Feed to vanner	36	5,401	18,101	1,520	.....	5.01	.....	.....	7.07	.....	0.62	.....	.....	113	3.26	.....
Concentrates	.....	.....	731	.....	3.93	.....	.....	.....	0.29	4.04	7.39	.....	.....	54	1.56	47.41
Tailings	38	7,378	17,370	1,068	2.72	6.84	136.60	.....	6.78	95.96	0.34	.....	.....	59	1.70	52.59
Total products	.....	.....	18,101	.....	.....	.....	.....	.....	7.07	100.00	.....	.....	.....	113	3.26	100.00

to trace the material through the entire system. The numbers in Fig. 693 are the sample numbers referred to in Table 486 (see page 1392). Table 487 gives a summary of the products and details as to the water quantities.

TABLE 487. — SUMMARY OF FOURTEEN-DAY TEST ON RICHARDS' PULSATOR CLASSIFIER.

Tons treated per 24 hours by system	128.00
" concentrates produced per 24 hours	15.29
Ratio of concentration. Tons into one	8.37
Percent of copper recovered in concentrates	59.28
Gallons of fresh water added per 24 hours	267,179.00
" " " " " " ton fed	2,087.40

A later test under similar conditions showed a higher capacity (175 tons approximately), but the percentage of copper recovered fell off. This is due to the fact that fourth, fifth, and sixth discharges were united and treated upon the same Wilfley table, a practice most emphatically disapproved by the author. Table 488 gives the results obtained in this test and Table 489 the summary.

TABLE 489. — SUMMARY OF RICHARDS' PULSATOR TEST (NINE-DAY TEST).

	Using as Original Feed.	
	Huntington Mill Discharge.	Feed to Pulsator.
Tons of material treated per 24 hours	187.11	172.00
" " concentrates produced 24 hours	13.15	13.15
Ratio of concentration tons into one	14.23	13.08
Percent of copper recovered in concentrates	36.89	41.98
Gallons of fresh water added per 24 hours	212,147.	208,779.
" " " " " " ton fed	1,134.	1,214.
Pulsations per minute	400.	400.

Fig. 694 gives a graphical representation of the sizing test made upon the feed for the pulsator and the various discharges obtained. This is summed up in Table 490. By looking at Table 490 we shall see that while in the feed but 18% was finer than 100 mesh, the first discharge has 56% finer than 100 mesh, the second discharge 41%, but the third only 7%, the fourth 2%, the fifth but 0.5%, and the last none. This shows very nicely the character of the work done by this machine.

TABLE 490. — SUMMARY OF RESULTS SHOWN IN GRAPHICAL PLOT, FIG. 694.

Sizes.	Percentages Coarser than Given Size.						
Coarser Than.	Feed.	Discharge.					
		No. 1.	No. 2.	No. 3.	No. 4.	No. 5.	No. 6.
1.00 millimeter	12	0	0	12	31	52	71
0.500 "	61	5	16	68	84	91	97
100 mesh	82	44	59	93	98	99.5	100

PULP THICKENERS.

§ 1134. DEFINITION OF SLIMES. — Before passing to the various devices used more particularly for treating slimes, it may be well to stop a few moments and try to find out just what constitutes a slime. The mill man usually designates as slime that material which escapes treatment on the machine in question; for example, the head water of the Wilfley table is usually spoken of as slime. Considered from this point of view the term slime becomes of rather indefinite meaning. The obscurity as to what constitutes slime has arisen from the fact that the mill man has picked out the characteristic of slime which

TABLE 488.—TREATMENT OF HUNTINGTON MILL PRODUCT BY RICHARDS' PULSATING CLASSIFIER SYSTEM. NINE-DAY AVER.

Name of Sample.	Sample Number.	Rate per 24 Hours.		Grains per Gallon.	Specific Gravity.	Percentage of Water.			Solids.		Assay Percent.			Copper.		
		Gallons.	Pounds.			In Original Feed.	To Individual Machine.	In Individual Product.	In Original Feed.	To Individual Machine.	Copper.	Insoluble.	Iron.	Pounds per 24 Hours.	Percent of In Original Feed.	Percent of To Individual Machine.
Huntington Mill Discharge	1	207,330	374,219	819	2.82	100.00	100.00	100.00	100.00	100.00	1.32	.....	.....	4,934	100.00	100.00
Overflow Tank No. 1	2	148,916	33,113	101	2.83	71.83	71.83	70.69	8.85	8.85	1.77	.....	.....	588	11.92	11.92
Plug discharge No. 1	3	61,758	344,004	2,527	2.85	29.78	29.78	29.31	91.92	91.92	1.26	.....	.....	4,335	87.86	87.86
Total	.....	210,668	377,117	812	.....	101.61	101.61	100.00	100.77	100.77	.....	.....	.....	4,923	99.78	99.78
Feed to pulsator	3	61,752	344,004	2,527	2.85	29.78	100.00	100.00	91.92	100.00	1.26	.....	.....	4,335	87.86	100.00
Overflow No. 1	4	22,637	44,676	895	2.81	10.92	36.66	13.38	11.94	12.99	1.34	.....	.....	598	12.12	13.79
" " 2	5	23,181	61,226	1,198	2.80	11.18	37.54	13.70	16.36	17.80	1.22	.....	.....	745	15.10	17.19
" " 3	6	35,576	78,330	999	2.86	17.16	57.61	21.02	20.93	22.77	1.15	.....	.....	904	18.32	20.85
" " 4, 5 and 6	7	87,826	160,423	829	2.87	42.36	142.22	51.90	42.87	46.63	1.31	.....	.....	2,102	42.60	48.49
Pulsator hutch	8	.....	111	.....	4.26	.....	.....	.....	0.03	0.03	5.61	13.2	36.0	6	0.12	0.14
Total	.....	169,220	344,766	924	.....	81.62	274.03	100.00	92.13	100.22	.....	.....	.....	4,355	88.26	100.46
Feed Willley No. 1	4	22,637	44,676	895	2.81	10.92	100.00	100.00	11.94	100.00	1.34	.....	.....	598	12.12	100.00
Concentrates	9	1,550	3,731	1,092	3.92	0.74	6.85	4.74	1.00	8.35	9.00	26.5	27.2	336	6.81	56.19
Middlings	10	1,384	2,438	799	2.84	0.67	6.11	4.23	0.65	5.46	1.74	.....	.....	42	0.85	7.02
Head water	11	17,810	3,150	80	2.81	8.59	78.68	54.42	0.84	7.05	1.57	.....	.....	49	0.99	8.20
Tailings	12	11,983	34,892	1,321	2.72	5.78	52.93	36.61	9.32	78.10	0.48	.....	.....	169	3.43	28.26
Total products	.....	32,727	44,211	613	.....	15.78	144.57	100.00	11.81	98.96	.....	.....	.....	596	12.08	99.67
Feed Willley No. 2	5	23,181	61,226	1,198	2.80	11.18	100.00	100.00	16.36	100.00	1.22	.....	.....	745	15.10	100.00
Concentrates	13	1,281	3,946	1,397	3.95	0.62	5.53	3.59	1.05	6.44	8.44	22.6	29.5	333	6.75	44.70
Middlings	14	1,561	3,242	942	2.96	0.75	6.73	4.38	0.87	5.30	3.02	.....	.....	98	1.99	13.15
Head water	15	21,427	8,888	188	2.73	10.33	92.43	60.11	2.38	14.52	0.78	.....	.....	69	1.40	9.26
Tailings	16	11,378	45,965	1,832	2.73	5.49	49.08	31.92	12.28	75.07	0.54	.....	.....	250	5.07	33.56
Total products	.....	35,647	62,041	789	.....	17.19	153.77	100.00	16.58	101.33	.....	.....	.....	750	15.21	100.67
Feed Willley No. 3	6	35,576	78,330	999	2.86	17.16	100.00	100.00	20.93	100.00	1.15	.....	.....	904	18.32	100.00
Concentrates	17	1,678	5,205	1,407	3.83	0.81	4.72	3.71	1.39	6.64	6.68	27.8	28.3	348	7.05	38.50
Middlings	18	3,907	20,107	2,334	2.90	1.88	10.98	8.65	5.38	25.67	1.48	.....	.....	298	6.04	32.96
Head water	19	28,551	1,361	22	2.80	13.77	80.25	63.17	0.36	1.74	1.69	.....	.....	23	0.47	2.54
Tailings	20	11,059	50,013	2,051	2.73	5.34	31.09	24.47	13.36	63.85	0.46	.....	.....	228	4.62	25.22
Total products	.....	45,195	76,686	770	.....	21.80	127.04	100.00	20.49	97.90	.....	.....	.....	897	18.18	99.22
Feed tank No. 2	7	87,826	160,423	829	2.87	42.36	100.00	100.00	42.87	100.00	1.31	.....	.....	2,102	42.60	100.00
Overflow	21	55,793	478	4	2.80	26.91	63.53	61.91	0.13	0.30	2.02	.....	.....	10	0.20	0.48
Plug discharge	22	34,322	158,902	2,100	2.92	16.55	39.08	38.09	42.46	99.05	1.27	.....	.....	2,025	41.04	96.33
Total products	.....	90,115	159,380	802	.....	43.46	102.61	100.00	42.59	99.35	.....	.....	.....	2,035	41.24	96.81
Feed Willley No. 6	22	34,322	158,902	2,100	2.92	42.36	100.00	.....	42.46	100.00	1.27	.....	.....	2,025	41.04	100.00
Concentrates	23	1,380	12,463	4,097	4.03	0.67	4.02	3.00	3.33	7.84	5.96	26.9	29.6	743	15.06	36.69
Middlings	24	5,959	29,299	2,230	3.00	2.87	17.36	12.93	7.83	18.44	2.44	.....	.....	715	14.49	35.31
Head water	25	23,041	281	6	2.80	11.11	67.13	50.02	0.08	0.18	1.62	.....	.....	5	0.10	0.25
Tailings	26	15,686	119,250	3,448	2.75	7.57	45.70	34.05	31.86	75.05	0.54	.....	.....	644	13.05	31.80
Total products	.....	46,066	161,293	1,588	.....	22.22	134.21	100.00	43.10	101.51	.....	.....	.....	2,107	42.70	104.05
Feed callow screen	27	35,118	80,082	1,034	2.72	16.94	100.00	.....	21.40	100.00	0.46	.....	.....	367	7.44	100.00
Oversize	28	40,015	63,868	724	2.72	19.30	113.94	50.51	17.07	79.75	0.41	.....	.....	259	5.25	70.57
Undersize	29	39,201	15,244	176	2.74	18.91	111.63	49.49	4.07	19.04	0.72	.....	.....	109	2.21	29.70
Total products	.....	79,216	79,112	453	.....	38.21	225.57	100.00	21.14	98.79	.....	.....	.....	368	7.46	100.27
Feed tank No. 3	29	39,201	15,244	176	2.74	18.91	100.00	.....	4.07	100.00	0.72	.....	.....	109	2.21	100.00
Overflow	30	28,268	966	16	2.79	13.64	72.11	81.95	0.26	6.34	1.47	.....	.....	14	0.28	12.84
Plug discharge	31	6,226	13,726	1,000	2.75	3.00	15.88	18.05	3.67	90.04	0.70	.....	.....	96	1.95	88.07
Total	.....	34,494	14,692	193	.....	16.64	87.99	100.00	3.93	96.38	.....	.....	.....	110	2.23	100.91
Feed Johnston vanner	31	6,226	13,726	1,000	2.75	3.00	.....	.....	3.67	100.00	0.70	.....	.....	96	1.95	100.00
Concentrates	.....	.....	834	.....	.....	.....	.....	.....	0.22	6.08	6.47	.....	.....	54	1.10	56.25
Tailings	32	10,181	12,892	574	2.70	4.91	163.52	.....	3.45	93.92	0.32	.....	.....	42	0.85	43.75
Total	.....	.....	13,726	.....	.....	.....	.....	.....	3.67	100.00	.....	.....	.....	96	1.95	100.00
Total product system	.....	419,447	375,636	406	.....	202.31	.....	.....	100.39	.....	.....	.....	.....	4,904	99.39	.....

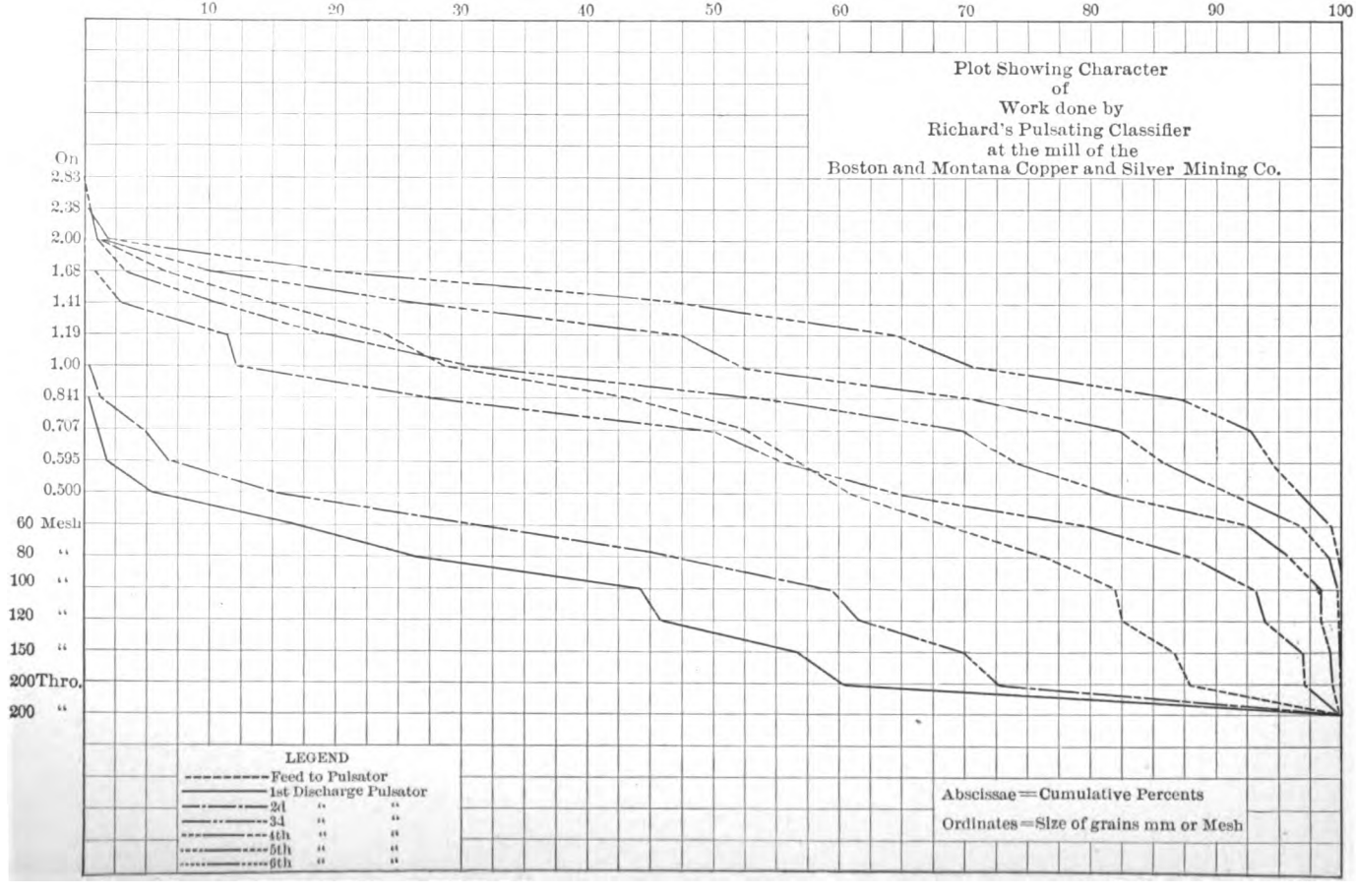

FIG. 694. — GRAPHICAL REPRESENTATION OF SIZING TEST UPON PULSATOR CLASSIFIER PRODUCTS.

most affects his operations; namely, the inability to settle in water, while the cyanide man has picked out other characteristics affecting his processes and each has framed a definition more or less suited to his own particular case.

A study of these various definitions should do much to show what characteristics an ore-dressing product must possess to entitle it to rank as slime. Many of these definitions are extremely arbitrary and, while holding very nicely in connection with some one particular ore, fall down in a very considerable number of cases. Slimes, while differing widely as far as their chemical composition is concerned, possess certain definite physical properties, possessing which alone entitles an ore-dressing product to be classed as a slime. Size cannot be made the determining factor; in other words, slimes are, of necessity, fines, but all fines are not slimes. A product containing particles finer than 200 mesh may or may not be a slime. It will be a slime if it is in the physical condition which causes it to remain in suspension in water, and if it possesses the unleachable characteristic of slimes. The author does not wish to offer a definition of slimes to cover all cases, but rather prefers to point out the physical conditions exhibited by so-called slimes as brought out in definitions proposed by others, and thus give the reader, instead of a brief definition, a general idea of what is usually meant by the word slimes.

§ 1135. "SLIMES." — That part of a crushed ore or rock known as "slime" has been encountered since the earliest times of ore milling and has always been the source of much trouble and loss. Its effects have been observed and studied by most mill men and much has been done to show its true nature.

The earliest definition of slime in English is found in "Mineralogia Cornubiensis," London, 1778: "Slime — Ore or slime tin; the pulverized mineral mixed with water in the state of slime or mud, or the superfine particles of ores, which are carried down by the water in stamping ore dressing until they settle in a pit of water called the slime-pit."

The word "slime" is equivalent to the German "Schlamm" and is related to the Latin "limus" or "slimus," generally meaning "mud."

The modern definitions of slime are many and varied and group themselves naturally under three heads: depending upon (1) the size or weight of particle, (2), the impermeability of the material to solutions, (3) the chemical or mineralogical character of the material.

Among the definitions falling under the first head the following have been found:

G. Caetani and E. Burt:[37] "In a general way 'slime' is that mill product of which from 90 to 95% will pass a 200-mesh screen (0.067-millimeter aperture). As a screen product, slime constitutes all material that will pass a 200-mesh screen."

An editorial in the *Engineering and Mining Journal* states:[22] "Rock so comminuted that it will pass through a sieve having 200 holes per linear inch, that is, 200 mesh, becomes slime when mixed with water."

Another editorial in the *Engineering and Mining Journal*[28] states that it has been suggested that "Slimes are that product which, after crushing or grinding, will pass a mesh having a number of holes to the lineal inch equal to 50 times the specific gravity of the product."

J. H. Collins[27] defines slime as "that material which will remain suspended in clear water for a perceptible time or will not sink in it at a greater rate than say 1 inch in 10 seconds, and is not perceptibly gritty when rubbed between the fingers."

W. Bettel[17] of South Africa would confine the term to "particles under one one-hundredth millimeter in diameter, that is, under one twenty-five-hundredth of an inch in diameter."

W. A. Prichard [25] states: "Running water will float anything from the finest kaolin to the heaviest boulders, according to the velocity and quantity of water. Slime and sand can only be relative terms, since there is no line of demarkation between the particles floating in muddy water and the pieces of ore raised from the mine or issuing from a rockbreaker. Therefore the definition is a matter of arbitrary choosing. By common usage the term slime in Western Australia has come to mean fine pulp which it is considered unprofitable to leach, as distinguished from leaching sand. The separation is made according to varying economical considerations."

Among the definitions dependent upon the effect of slime in preventing the percolation of solutions may be found the following:

A. von Gernet:[17] "The unleachable portion of the battery pulp."

J. Loevy:[17] "That portion of the crushed ore which, owing to its physical condition, is an unleachable product."

W. A. Caldecott:[17] "That portion of crushed ore which, owing to its finely divided condition, is non-leachable, and from which no leachable product can be separated."

W. J. Sharwood [17] says: "A complete and exact definition must take into account all these points: (1) The fact that the slime is a product of some process, some crushing or pulverizing treatment of ore or gangue; (2) The relative state of division or impalpable character of this substance; (3) Its non-leachable or its slow settling character. It should refer to physical conditions only, and not be restricted by chemical or mineralogical composition. A definition based on the exact dimensions of slime particles cannot be accepted, as these do not admit of determination by readily applicable methods. It seems preferable to omit any reference to the wet or dry condition; the material may be in suspension, a thin mud or in a plastic or even leatherlike condition while still remaining a slime." He further states that Mr. Caldecott's definition as given above is most generally accepted among cyanide men.

Definitions emphasizing the chemical or mineralogical character of slimes include the following:

Courtenay DeKalb [19] says: "Slimes are not slow in settling nor impermeable, because of any effect of crushing, but because of (1) apparent density, due to an originally flocculent condition, or (2) to the circumstance that each particle possesses one dimension excessively small relatively to the other two dimensions. Argillaceous material may be considered as fulfilling the former condition, and sericite is a good example of the second. It seems to me that true slimes are the result of an original condition of a part of the ore . . . and that a sharp distinction should be drawn between 'fines' which are a result of crushing, and 'slimes' which are due to the mineralogical character of the material treated."

W. Feldtmann [17] defines slimes as "the very fine, or in the case of free milling ores the clayey, portion of the tailings."

M. Eissler:[17] "The very fine particles of talcose and clayey material, mixed with the very fine grains of quartz, iron oxide, and sulphides."

F. L. Bosqui:[17] "By the term slimes we mean the finely divided clayey residues which settle in a tailings reservoir, at points furthest from the tailings sluice discharge, and pack in the form of dense adhesive layers. Pulverized slimes, with no admixture of coarser material, are practically impervious to cyanide liquors."

A. James,[17] speaks of slimes as "the finer and almost impermeable products of the mill," and "the portions of the tailings dump farthest from the intake yield a mass of matter practically untreatable by the percolation process. In Western Australia and other districts even coarsely ground dry-crushed ores

may contain so great a proportion of clayey calcareous slimes as to impede percolation."

J. R. Williams:[17] "The clayey portion of the ore, mixed with fine sands."

C. W. Merrill[7 16] calls attention to the distinction between "angular" or granular and "amorphous" particles in material passing a 200-mesh sieve, the former yielding a leachable product even when in an exceedingly fine state of comminution, the latter forming a flocculent slime.

M. P. Boss[53] states: "We know slime now as a condition of pulp that requires attention more or less different from that given to sand. In my own experience I have found that slime, as it appears to us, is not altogether a matter of extreme fineness; but the manner of creating it is also a factor. Aeration in process of crushing greatly increases the visual evidence of slime."

W. A. Caldecott[38] says: "$2AlHSiO_4 + H_2O$ (kaolin) $+ 2\ H_2SO_4 = Al_2\ (SO_4)_3 + 2\ Si\ (OH)_4 + H_2O$. The colloidal silicic acid formed in this way remains suspended for long periods in water or alkaline solutions in a gelatinous spongy form, and thus retards settlement of the non-colloidal slime particles. Similarly in leaching or filtering it retards the passage of solutions, but dehydration by drying, calcination, or roasting converts it into the non-colloidal state so that settlement or leaching can then proceed freely. Experiments made by adding a small percentage of artificially prepared silicic acid to current pyritic slimes show a remarkable decrease of rate of settlement in comparative trials. As kaolin is derived from the decomposition of feldspar it is possible that clayey ore may likewise contain colloidal silicic acid liberated from the alkaline silicate present in the feldspar, by carbonic acid derived from the air, and that to this cause likewise is partly due the plasticity of clay."

A. W. Warwick[62] proposes a new definition for the word slime as "that portion of crushed ore which, owing to its containing combined water, possesses the property of forming colloid hydrates when mixed with water." Commercially "slimes" obtained by the settlement of finely crushed material in still water will consist of those colloid hydrates in which there are suspended fine particles of crushed quartz or other crystalline material.

Among the colloids mentioned by Graham in the early sixties are hydrated alumina, hydrated peroxide of iron, gelatinous silicic acid, hydrated stannic oxide, etc. All these substances when placed in an excess of water appear to form what has been referred to as solid solutions and make viscous or gelatinous bodies. The following is a short list of the chief naturally occurring bodies, which make a large amount of mill slimes.

	Combined H_2O Percent.
Limonite	14.5
Talc	4 to 6
Sericite, Steatite	5 to 6
Kaolin	13 to 15
Ordinary clay	12 to 14

It will be noted that in all these cases these bodies possess a common characteristic in that they have water of combination. It is further noteworthy that when these bodies are calcined at a low temperature the dry material does not offer the same difficulties in treatment that the unbaked material does.

These sliming materials do not appear to obey the laws of discrete matter falling in water. It is also well known that electrolytes such as lime, sulphates of the alkalis, dilute sulphuric acid, etc., act rapidly upon masses of slime, coagulating the slimy particles and rapidly precipitating them.

Slimes yielded by the overflow from direct filling of cyanide vats, treating a siliceous ore carrying kaolin, yielded a product which contained:

SiO_2	64.2%
Al_2O_3	25.4
Combined H_2O	6.3
Fe_2O_3, etc.	4.1

It was therefore composed one-half of clay and rather less than one-half of finely divided silica.

An analysis made by Loevy, of Johannesburg, on slimes collected, after separation of the sands, from the Jubilee and Salisbury mill gave the following results:

SiO_2	72.15%
Al_2O_3	16.47
Fe_2O_3	4.42
MgO	1.26
$Ca_3(PO_4)_2$	0.04
S	0.70
SO_3	0.03
Alkalis	0.05
H_2O (combined)	3.40

It was estimated from the above that the "slimes" consisted of 35% clay and 51% silica.

The United States Department of Agriculture has conducted a series of experiments covering many years for the purpose of investigating the effect of water on rock powders and the manner in which alteration and decomposition takes place in minerals, for example feldspar, during the process of erosion. The results obtained appear to have direct bearing upon the question of slimes, and in some measure offer an explanation of certain phenomena exhibited by them. A very interesting paper is "The Effect of Water on Rock Powders," by Allerton S. Cushman,[1] Bureau of Chemistry, United States Department of Agriculture, in which will be found the results of these investigations. The summary of this paper is as follows:

(1) "The effect of wet grinding is to increase the binding power or cementing value of rock powders." . . .

(2) When water comes in contact with most rock powders immediate reactions take place which are to a certain extent analogous to those which take place with cement and powdered glass.

(3) These reactions are shown by the alkalinity indicated by phenolphthalein, but this alkalinity is to a great degree inhibited if the solid particles are filtered out.

(4) The microscope reveals an accumulation of amorphous material of gummy appearance largely associated with the surface of the crystalline particles as the action of water proceeds.

(5) Evidence is given to show that the basic ions set free associate themselves to a certain degree with the solid particles, leading to a concentration of the acid ions in the clear solution.

(6) It is shown that the behavior of rock powders after being acted on by water is similar to that of coagulated colloids artificially prepared in the laboratory, and that the formation of colloids upon the surfaces of the particles would account for the increased binding power under the action of wet grinding. The word "pectoid" is recommended to describe the condition of the particles as being more appropriate to the connection in which it is used than the words "colloid" or "hydrogel."

In a paper entitled "The Decomposition of the Feldspars," by A. S. Cushman and Prevost Hubbard,[2] United States Department of Agriculture, we find:

"So in the case of a rock powder subjected to the action of water immediate reaction takes place. The extent of these reactions seems to depend not only upon the degree of fineness of the powder, but also upon the removal of insoluble decomposition products formed upon the surface of each individual particle. Thus wet grinding has invariably resulted in greater decomposition of a rock powder than has been obtained by dry grinding for the same length of time and subsequent treatment with water."

These experiments, although applied to road-building and agriculture,

seem to show that the peculiar characteristics universally encountered in slime can be explained by the decomposition of the complex silicates, of which feldspar is a common and fair example, in water, and the formation of colloidal or pectoidal compounds about the grains of unaltered mineral.

A microscope designed to study very fine particles suspended in water has been devised by Zsigmondy and Siedentopf [10] which they call the ultramicroscope. It depends upon the fact that when a ray of light passes through a liquid, particles previously invisible can be seen in the path of the ray. The light is brought to a focus by means of a lense and the microscope is directed at right angles to the ray and focused on the focal point of the condensing lense. Particles the diameter of four millionths of a millimeter are rendered visible.

By the use of this instrument the particles of many colloidal solutions have been rendered visible and it has thus been proved that they are mixtures and not true solutions. The author mentions this instrument as a possible aid to the study of the question of slimes.

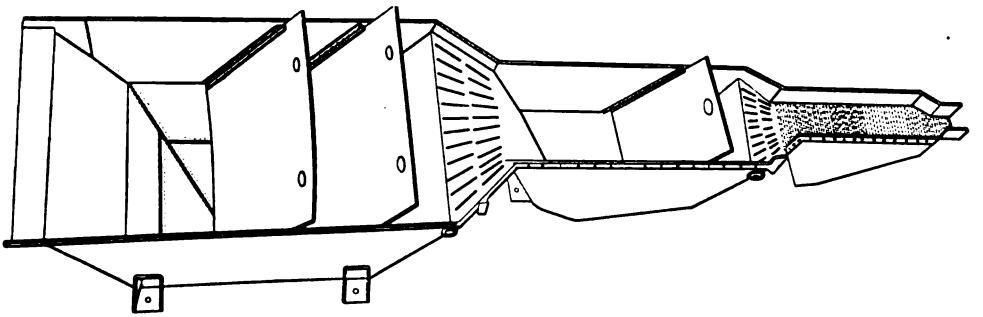

FIG. 695. — RICHARDS-SHEPARD SPITZKASTEN OR PERFORATED-BOARD CLASSIFIER.

After having gathered some ideas as to what constitutes slime, it may be well to pass to a consideration of what may be done to treat slimes so as to settle them and leave the clarified water to be returned to the mill circulation. The method best suited to any particular problem will depend largely upon the condition of the slimes to be treated. If it is a case of fines rather than slimes, that is to say, if there has been very little formation of pectoids or colloidal hydrates, the use of clarifying or settling tanks is usually sufficient; but in cases where true slimes are to be handled, various other expedients may be resorted to, such as calcining or treatment with various chemicals as will be described later on.

The question of treating slimes will be discussed under three headings: I. Pulp thickeners; II. Clarifying tanks with or without the use of chemical means of clarifying the water; and III. Distributing devices.

Surface-Current Box Classifiers.

§ 1136. Richards-Shepard Spitzkasten.[15] — The Richards-Shepard Spitzkasten or perforated board-classifier, made by the Denver Engineering Works Company, is shown in Fig. 695. These Spitzkasten consist of a series of compartments beginning with one of determined cross-section and increasing in cross-section as each section is added. The pulp flows from the launder into the first compartment and here the coarsest particles settle to the bottom

of the compartment. As the pulp flows into the second compartment it meets a much larger cross-section, hence the velocity of flow is less and particles of the next smaller size settle to the bottom and so on.

It will be noted in the illustration that a perforated board is used in the first compartment. In some cases clean water is introduced at the bottom of this compartment, which rising through the perforations allows only the heaviest mineral particles to pass through and down into the bottom of the compartment.

In certain cases it is advisable to use a perforated board in other compartments besides the first. In the largest size compartments, baffle boards are used as shown in the cut, and goose-neck discharges are provided, for the purpose of saving mill height. These classifiers are built with capacities of from 20 to 80 tons per day and either two, three, or four compartments.

§ 1137. *Courtenay DeKalb* [13] has modified the Richards perforated-board classifier, giving it a circular form, with a central radially distributed feed and peripheral overflow. The spigot is said to occasion but little trouble from plugging and the separation of the slimes from the sands has been uniformly good. The feed to this is Wilfley tailings. A split cuts out most of the coarse tailings so that relatively little sand is found in the classifier feed.

The screen analysis of Table 491 shows the quality of work done by this classifier.

TABLE 491. — SCREEN ANALYSIS OF PRODUCTS FROM DEKALB'S CLASSIFIER.

Mesh.	Diameter of Opening, Millimeter.	Spigot Percent.	Overflow Percent.
On 50	0.3302	2.58	.....
" 70	0.2286	18.33	0.72
" 90	0.1524	9.32	0.99
" 120	0.1016	14.53	1.24
" 150	0.0762	19.52	3.39
Fines	.....	35.71	93.64
		99.99	99.98

WHOLE-CURRENT BOX CLASSIFIERS.

§ 1138. Whole-current box classifiers will be found discussed in Vol. I., page 443 and following.

ASCENDING-CURRENT CONES OR CYLINDERS.

§ 1139. THE CALLOW CONE. — The Callow cone is the invention of J. M. Callow.[59] This is a conical settling tank with vertical central feed, peripheral overflow, annular launder to collect and convey away the overflow, and a spigot in the form of a gooseneck to discharge the settlings.

In Figs. 696*a* and *b* the angle between the sides of the cone is 60°. A diameter of 8 feet at the rim is found to adapt itself best to mill work. The rim launder is 4½ inches wide and deep. The overflow rim (1) is of rubber belt for ease of leveling. The central feed pipe (2) is 12 inches in diameter, and dips into the water 12 inches. The feed is admitted and the currents broken up by a feed box (3), a cone (4), and a disc float (5), as shown in the cuts. The spigot gooseneck (6) is of 1¼-inch pipe and 1¼-inch hose, with a gate valve (7) for shutting it off and a globe valve (8) for letting on pressure water from the hydrant in case of a stoppage. The discharge end of the gooseneck is from 12 to 16 inches below the water level in the cone, and it is constricted at the tip

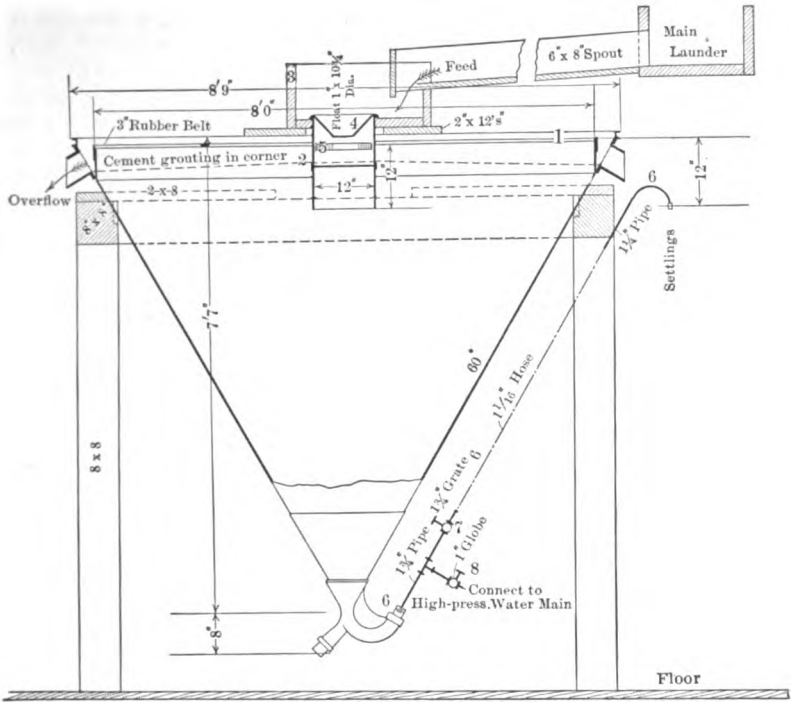

FIG. 696*a*. — CALLOW SETTLING CONE.

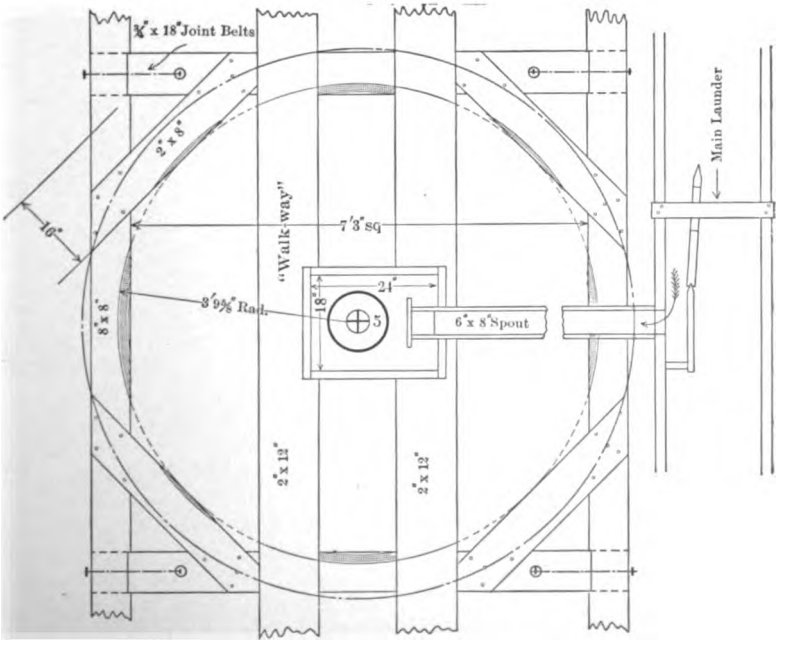

FIG. 696*b*. — PLAN.

to $\frac{3}{8}$ or $\frac{7}{16}$-inch diameter of discharge opening. This tank can be built of No. 16 steel plate, which is easy to work and has the advantage of low cost. Such a tank weighs 650 pounds.

On Butte copper slimes,[60] 57 Callow tanks, each supplied with 31.4 gallons of pulp per minute, yielded 5.2 gallons spigot product a minute, reducing the quantities of pulp at the ratio of 6.03 to 1, with details as shown in Table 492.

TABLE 492. — CALLOW CONE TEST ON BUTTE COPPER SLIMES.

	Total Gallons per Minute.	Grams per Gallon.	Tons per 24 Hours.	Assay Per-cent Copper.	Ounces Silver per Ton.	Total Contents 24 Hours.	
						Pounds Copper.	Ounces Silver.
Feed	1,792.7	41.15	117.16	2.8	2.81	6,559	329
Overflow	1,495.0	16.25	38.45	1.815	2.36	1,394	90.8
Spigot product	297.5	154.5	73.13	3.5	3.34	5,106	244.3

The tanks recovered 62.5% of the solids contained in the feed, reduced the same to 16.6% of its original bulk, and gave a spigot product carrying 77¾% of the copper and 74¼% of the silver. This pulp was treated on 30 Wilfley tables. The mill using them now recovers per month 80,000 pounds of copper and 3,500 ounces of silver from a feed of 2,000 gallons of slime water per minute, which previously was lost. The Butte slimes constitute 10% of the ore and the copper content is 10% of that in the ore. Half of this is saved on the tables. Later the spigot was thickened to 400 grams dry pulp per gallon to suit the Wilfley tables. In another Butte mill round tables give a good result in treating this spigot product.

As a general rule when treating Butte copper slimes each tank receives 30 gallons of pulp per minute carrying 40 grams (1.06% solids) dry slime per gallon, and delivers overflow with 3 to 4 grams per gallon (practically clear water) and thickened pulp 300 grams per gallon (8% solid), a settling ratio of 9.3 to 1, or about 2 tons per tank per 24 hours. For Coeur d'Alene slimes it is customary to feed 35 gallons of pulp per minute, and since the galena is heavier, the yield per tank is about 3 tons per 24 hours. The Uncle Sam Consolidated Mining Company [59] of Eureka, Utah, treating 80 tons per day where water is excessively scarce, requires 200 gallons per minute in its machines, and yet there is an actual loss of only 5½ gallons of water per minute. Eight Callow cones unwater the tailings and return clear water to the mill to be used again. The water actually lost to the mill circulation is only ½ ton per ton of ore treated.

The annular area outside the feed pipe is 4,595,689 square millimeters. Thirty gallons per minute gives a volume of 111,746,250 cubic millimeters. The cubic millimeters divided by the square millimeters give the rising current of 24.3 millimeters per minute, or 0.4 millimeter per second. Referring to Table 638 we can see that the size of the particle of quartz that can be lifted by this current is 0.024 millimeter in diameter. The writer believes that, when the investigation is made to ascertain the actual diameter of these grains, they will be found to be smaller than 0.024 millimeter. The great success of the Callow system is due to the fact that, instead of pushing the whole pulp from one end to the other of a long narrow settling tank, the clear water is allowed to rise to overflow, while the thickened pulp settles downward to be discharged.

§ 1140. SHERMAN SYSTEM.[58] — In the Sherman system of settling as practised at Mill 132, a series of cylindrical tanks with conical bottoms having central feed and peripheral overflow is employed. It is customary to use a number of these tanks in series, the feed coming first into a small tank which delivers its overflow to a tank of larger diameter and so on. In this way the

velocity of the water currents are successively decreased and a series of spigot products is obtained ranging in size from the coarsest material contained in the feed to the finest.

Fig. 697 represents the tank which treats the undersize of the last trommel.[44] This tank is 4 feet in diameter and 4 feet deep. Suspended within the tank is a galvanized iron cylinder *B*, of such diameter that it occupies one-half of the tank area and extending from 6 inches above the water surface to within 15 inches of the bottom of the tank. Resting on the bottom, and extending 3 inches above the bottom of the iron cylinder *B*, is a cast-iron cone *C*. Encircling the top of the tank and 3 inches higher than the top of the staves is a circular launder *D*, which slopes toward and joins the discharge spout *E*. This tank delivers an overflow of fine sands and slime to the Sherman classifiers proper, and a spigot product consisting of the coarser sands with only the necessary amount of water. The spigot product is discharged through a series of openings as at *F*. Further details with regard to the place of the tanks or classifiers in the mill scheme will be found under the description of Mill 132.

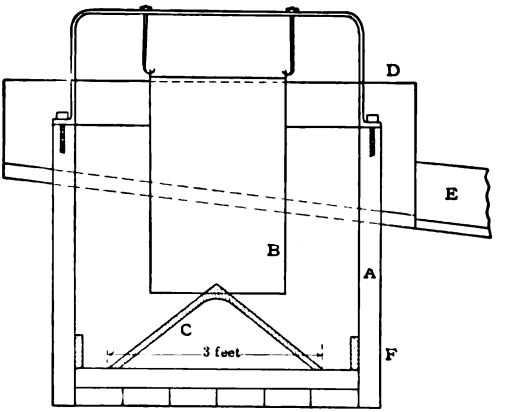

FIG. 697. — COARSE-SAND TANK. SHERMAN SYSTEM.

The overflow from this first tank just described, passes to the tanks of the slime-settling system proper. (See Fig. 698.) These tanks, which are six in

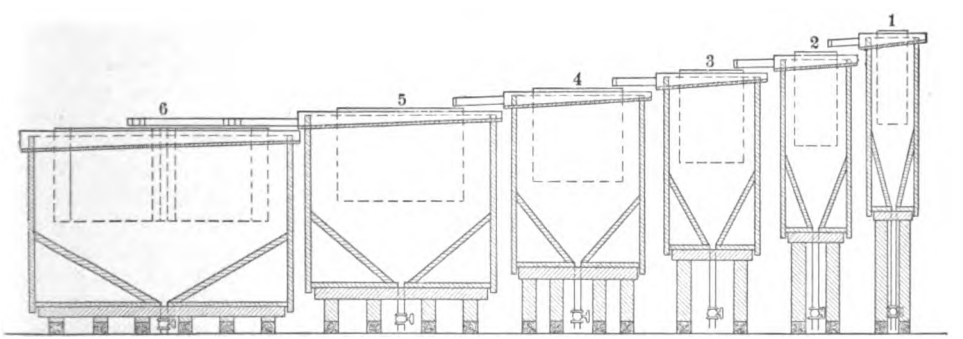

FIG. 698. — SHERMAN SETTLING TANK SYSTEM.

number, are cylindrical in shape and 12 feet high. The first tank of this series is 3 feet in diameter and each succeeding tank is double the capacity of the preceding one. Cylinders are suspended in these tanks similar to those in the first class of tanks and occupying one-half the water surface of the tanks. These cylinders extend from 3 inches above the water surface to a point 6 feet below. The tanks terminate below in a conical hopper with spigot discharge. Each tank has a peripheral overflow launder. As the tanks double in size the velocity of the carrying current is halved and material is therefore dropped in the different tanks according to the size of the particles. The discharge

spigots are so valved that the pulp may be delivered to the tables with only the required amount of water.

Table 493 gives a screen test of six tanks at Mill 132.

TABLE 493. — SIZING TEST OF PRODUCTS OF SIX TANKS AT MILL 132.

Size Mesh.	Percents.					
	No. 1.	No. 2.	No. 3.	No. 4.	No. 5.	No. 6.
On 30 mesh	4					
On 60 "	14	1.25				
" 100 "	54	40.25	12.80			
" 150 "	20	42.00	47.50	16.25		
" 200 "	4	12.50	23.50	31.25	22.50	1.25
Through 200 mesh	4	4.00	16.20	52.50	77.50	98.75

This system of tanks, once installed, can be kept in continuous service for years without repairs and requires little attention after the valves have once been set.

§ 1141. MERRILL LARGE CONES. — Fig. 699 shows a form of cone classifier or settling tank designed by C. W. Merrill [41] and in use at Mill 106. These

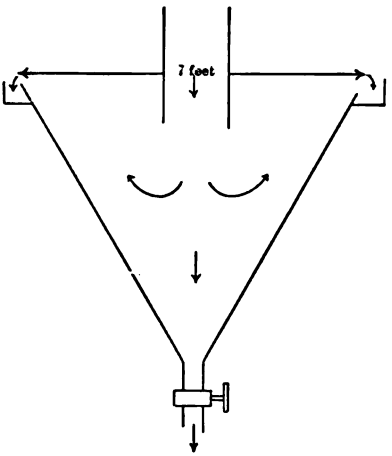

FIG. 699. — MERRILL CONICAL SETTLING TANK.

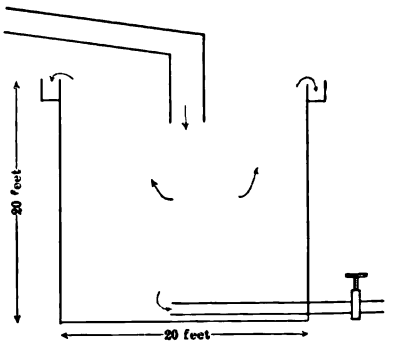

FIG. 700. — MERRILL CYLINDRICAL CLARIFYING TANK.

tanks, as indicated in the cut, are fed at the center and have a peripheral overflow launder. The dimensions and place occupied by these tanks in the mill scheme are given under the description of Mill 106. The combined overflows from the sixteen tanks of the first series and the twelve tanks treating the spigots of the first series are treated in Merrill cylindrical clarifying tanks.

§ 1142. MERRILL CYLINDRICAL CLARIFYING TANKS. — The Merrill cylindrical clarifying tanks are merely cylindrical tanks [41] some 26 feet, and some 18 feet in diameter, and 20 feet deep, provided with central feed, peripheral overflow, and false bottom for preventing a sudden rush of heavy slimes from clogging the spigot opening. The discharge of heavy pulp is made through a 3-inch pipe after the manner indicated in the diagrammatic sketch of Fig. 700.

In connection with these tanks Merrill calls attention to the fact that a higher efficiency can be maintained in the settling and slime tanks if the overflow is even at all points of the periphery. To this end he uses a lead strip on

the top of the tank, which allows the overflow to be readily adjusted by planing.

§ 1143. Colorado Iron Works Company Slime Tanks. — The Colorado Iron Works Company [11] makes two styles of slime tanks; both are sheet steel cylinders; one has a central feed and the other has the intake at the side.

The tank having the central feed (see Fig. 701) is a steel cylinder whose depth exceeds the diameter. The funnel *A*, through which the feed enters, slides in a sleeve *D*. The feed enters at *S* and passes down and out at the bottom of the sleeve. The tank has on its upper edge a strip of wood which can be dressed when needed so as to keep the overflow even all around. The overflow is conducted by the peripheral launder *C* to the discharge spout. The sleeve *D* is capable of vertical movement, and is raised by suitable mechan-

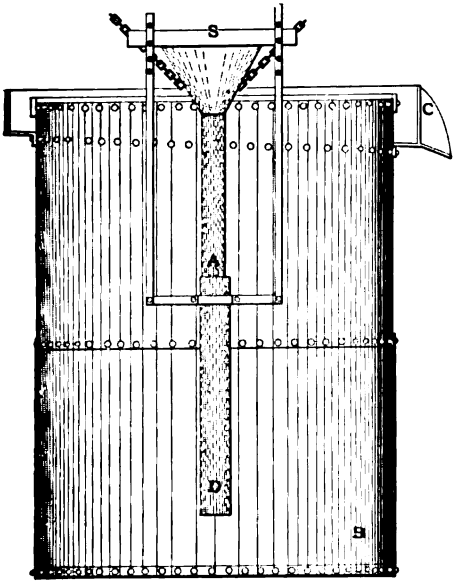

FIG. 701. — COLORADO IRON WORKS CENTRAL-FEED SLIME TANK.

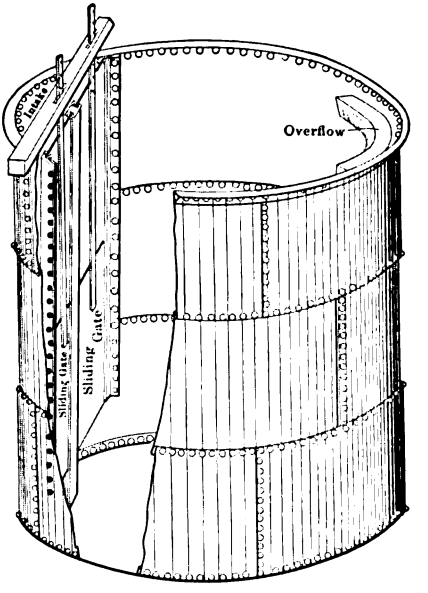

FIG. 702. — COLORADO IRON WORKS SIDE-FEED SLIME TANK.

ism, sliding on the funnel *A*. It is raised as the depth of slime on the bottom of the tank increases. By this means the settled slime is not agitated by the inflowing feed. The slimes are drawn off by means of jig cocks.

This type of tank is used in plants of small capacity.

The other tank, designed by the Colorado Iron Works Company, is shown in Fig. 702. It is similar to the one above except for the method of feeding and of discharge. There the intake is on one side, and passes almost to the bottom before getting into the tank proper. The overflow consists of a trough on the inside of the upper part of the tank. It extends only part way round.

The sliding gate is raised as the depth of the slimes increases, so that the distance between the settled slimes and the bottom of the gate is practically constant. The slimes are decanted off when they fill the tank half full. This type of settler is designed for plants of large capacity.

§ 1144. Berenger and Stingls Slime Tank.[4] — The slime-settling appararatus invented by Berenger and Stingls [3] is a cylindrical tank with a conical

bottom. The feed comes in through a pipe in the center which projects into an inverted cone situated near the bottom of the tank. Some of the slimes settle in this cone. The water rises very slowly in the tank, allowing the finer slimes to settle to the bottom. The settled slimes are drawn off from the mud cock in the bottom of the tank. The water overflows at the top of the tank into a peripheral launder which leads to the discharge spout.

§ 1145. A. H. Rogers calls attention to the use of round settling tanks[37] of very simple construction. The principle employed is the same as in the Callow cone. The slimy water is introduced through a vertical box into a round tank 10 feet in diameter by 18 feet deep, the inlet box extending down 12 feet below the surface. The top of the tank is planed level to make an even peripheral discharge, and the thickened pulp is drawn off below by a goose-neck. Twelve such tanks will return 1,000 gallons of clear water per minute from 1,400 gallons per minute of slime.

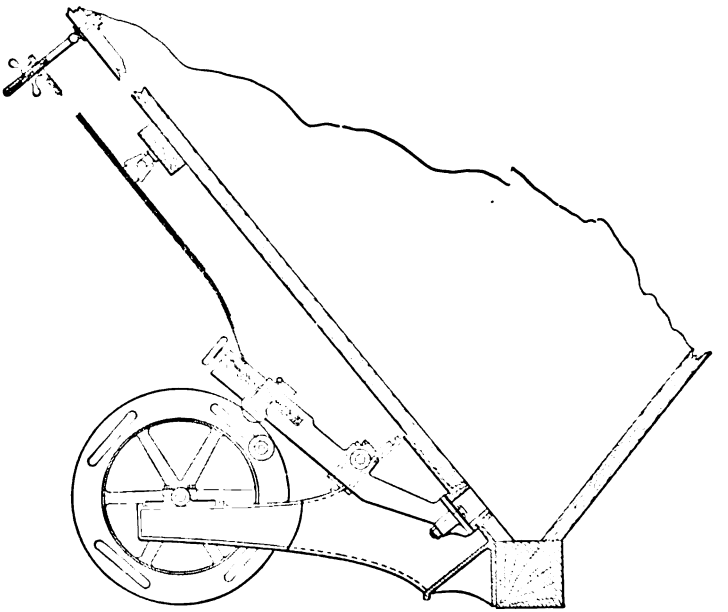

FIG. 703. — THE AYTON INTERMITTENT THICK PULP EXTRACTOR.

§ 1146. The pulp thickeners used at Mill 173[51], as described by O. P. Findlay, are round wooden tanks 10 feet in diameter and 18 feet high. The slimes enter through a 12-inch wooden pipe, placed in a vertical position in the middle of the tank and terminating within a short distance of the bottom. The tanks have conical bottoms terminating in a spigot which serves to discharge the thickened pulp. Water overflows at the top in a thin sheet and is used for wash water on tables, or is sent to clarifying tanks if necessary, as is the case when very slimy ore is being treated. Muddy water from the tables is returned to be clarified. About 80% of the water used is turned back into the mill system.

§ 1147. THE AYTON INTERMITTENT THICK PULP EXTRACTOR,[5] made by Allis-Chalmers Co., is a hopper-shaped unwatering box with a large spigot plug below, which is periodically opened by a mechanically driven cam and closed by a lever and spring. (See Fig. 703.) A box measuring 10 × 10 × 8½ feet deep should deliver 8 to 10 tons of thick pulp in 24 hours. At the El Bote

Mill, Zacatecas, Mexico, the pulp from the six Chili mills contains 85 to 90% water. This is sent to the pulp thickener, which returns 78 to 87% of the water to the Chili mills. The remaining 13 to 22% passes out of the spigot as thickened pulp containing only 40 % water.

Clarifying Tanks.

§ 1148. Many tanks used primarily as pulp thickeners also perform the function of clarifying tanks. Under this heading will be described only such devices as have been designed primarily with the view to returning clear water to the mill circulation. As is well known in certain districts where water is scarce, the entire success of many an ore-dressing project depends upon the ability to clarify and return to the mill circulation a very large percentage of the water employed in the ore-dressing operation. The use of electrolytes for precipitating slimes will also be discussed under this heading.

§ 1149. Binkley Settling System. — The following system of settling tanks was devised and used by George E. Binkley [47] with the idea of saving the largest possible percentage of water for return to the mill system. The system was so arranged that the mill tailings once elevated to the top of the mill would run by gravity through the entire system and deliver clear water to the mill storage tank without pumping. The arrangement of settling tanks is shown in Fig. 704. The sand tank *A* was 5 feet deep, 10 feet wide, and 20

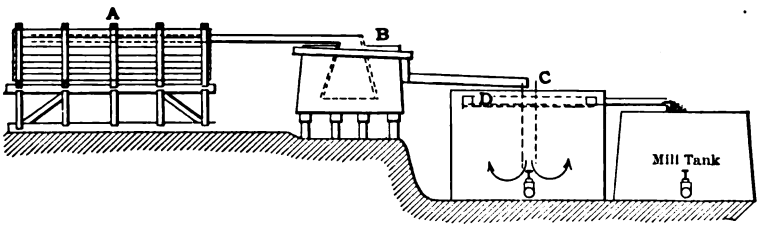

FIG. 704. — BINKLEY'S SETTLING SYSTEM.

feet long. It was divided into eight compartments so arranged that a continuous flow could be obtained through the whole or a part of the compartments. Each compartment had a discharge door in the bottom and was discharged intermittently after being cut out of circuit.

The slimes passing from the sand tanks were delivered to the heavy slime separator *B*. This was provided with pyramidal down-take box so that the velocity of the descending column of heavy slime would be decreased and the velocity of the ascending column also uniformly decreased, as the overflow lip of the tank was approached.

The overflow from the slimes separating tank was passed into a large slime tank *C* provided with a skimming trough *D* constructed as shown in Fig. 705 and introduced into the tank *C*, as shown. This scheme worked well as long as a thin layer of clear water remained at the surface of the water in the tank. This condition is maintained by regulation of the spigot discharge. Clear water was discharged even when over 30 gallons per minute were passing. The length of weir formed by the skimming launder was so great that the overflow over the lip did not exceed, in depth, $\frac{1}{32}$ inch. With this arrangement of tanks, even when treating a very slimy ore, 88% of the water was

FIG. 705. — SKIMMING LAUNDER.

recovered and returned to the mill system. Both tanks *B* and *C* discharge the settled material through gates at the bottom as shown in the cut.

§ 1150. E. A. H. Tays[50] suggests that, instead of a pyramidal down-take box, a baffle *B* (Figs. 706*a* and *b*) might be employed to advantage. This should be put across the heavy slimes box about 2 feet from the side where the slimes enter if the tank used is round, and 4 feet from the end if rectangular, the delivery trough discharging near the edge.

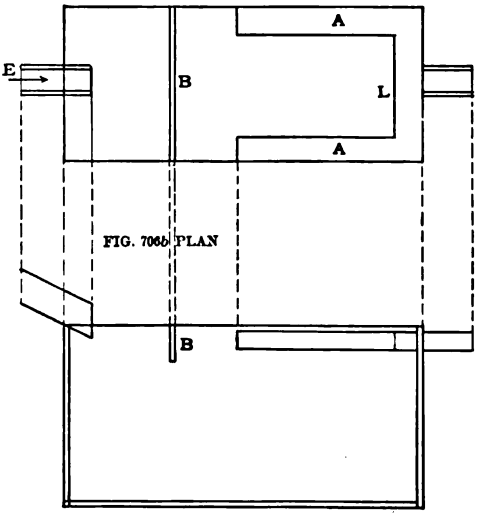

FIG. 706*b*. PLAN

FIG. 706*a*. — TAYS' CLARIFYING TANK.

FIG. 706*b*. — PLAN.

If the discharge trough *L* is placed just below the edge of the tank, 2 inches lower than top of the baffle board, and if 15 feet of skimming surface, more if possible, is available, then the water from the heavy slime tank of Binkley's system should be discharged practically clear. If slimes do pass over, the light slimes tank could be arranged in identical manner.

The baffle *B* need not be more than 1 inch thick and 12 inches deep, but should be set flush with the top of the tank. A rectangular tank should be not less than 20 feet long by 5 feet wide, and the baffle should be 4 feet from the end at which slimes enter. The skimming trough should be 4 inches wide and 6 inches deep, with side *L* cut 2 inches lower than the side nailed to the tank and flush with the top, leaving the side *L*, 2 inches lower than the top of the tank. A third tank might in extreme cases be used, but Tays has never found this necessary.

§ 1151. SLIME TREATMENT ON THE RAND. — The plant here described was being experimented with in 1903 at the Van Ryn Gold Mines Estate.[18] It was designed to take the whole of the slimes overflowing from the spitzkasten, and is so arranged that the flow is taken continuously at the top and the treated slimes continuously discharged at the bottom. Almost all of the water from the slimes is separated in one operation so as to be returned immediately to the mill reservoirs for use again. This saves losses by evaporation and absorption. These two losses are quite considerable in some places and justify the first cost of the plant. On the Rand it is generally estimated that it requires from 7 to 10 tons of water to treat 1 ton of ore. The average loss is 20% of the total amount of water used per day. Hence, on a basis of 100 stamps crushing 500 tons per day and using 5,000 tons of water, we have a loss of 1,000 tons of water per day, equivalent to 200,000 gallons; at 25 cents per 1,000 gallons this amounts to $50 per day or $1,500 per month. If it costs 62½ cents per 1,000 gallons, the water bill for one month amounts to $3,750.

Assuming 5 tons of crushed ore per stamp and 10 tons of water per ton of ore treated, there are, for 160 stamps, 8,000 tons of water per day required. The battery then discharges 8,800 tons of pulp. If the slimes are 25% of the rock crushed, then there are 200 tons of slimes per day (dry weight) with 600 tons of tailings retaining 10% of water; hence 8,140 tons are sent to the sliming plant per day. The slimes are so divided that each vat *A A* (Fig. 707) receives an equal proportion, or 4,070 tons of slime pulp per day.

Here the whole separation is effected, the slimes falling to the bottom and passing into the second vat *B*, the proportion of dry slimes to water being 1 : 4 by weight. The separated water goes to the mill again. Tank *B* receives 19 gallons of dry slime per minute and 111 gallons of water. Hence the water clarified and returned to the mill by *A A* is 1,103 — 130 = 973 gallons per minute.

A separation similar to that of *A A* takes place in *B*, the clarified water again going back to the mill reservoir, 83 gallons per minute, leaving 47 gallons of pulp per minute going into the solution chamber *b*. Here the pulp is brought into contact with cyanide solution, agitated by means of compressed air introduced in pipes and also by revolving arms. From this it passes to *C*, where

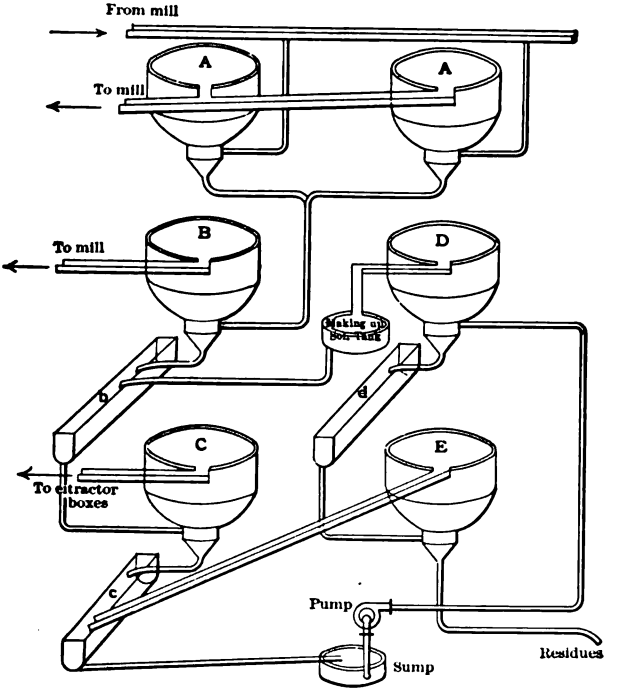

FIG. 707. — SLIME SYSTEM AT VAN RYN GOLD MINES ESTATE, SOUTH AFRICA.

the cyanide solution goes to extraction boxes, and so on through the cycle until the residue is finally discharged from *E*, as in the diagram. The capacity of each of the vats (20 feet in diameter) is 19,635 gallons.

§ 1152. SLIME TREATMENT IN ARIZONA. — At Washington, Arizona,[20] a 100-ton concentrating plant was run during the year 1903 without any running or surface water in sight. The water supply was accumulated in large storage tanks. While the plant was in operation, the water was in constant circulation, being alternately fouled and cleaned of both acid and slimes. In order to keep the plant running, it was necessary to minimize all water losses. The scheme about to be described saved and returned to the mill circulation 97% of the water used.

The water used in the mill was derived from a well capable of supplying

but 7,500 gallons per day in the dry season. The nine Wilfley tables required, in feed and wash water, 900 tons of water per day or 216,000 gallons. The table floor was laid in cement draining toward the center. Five percent of the ore was taken out as lead concentrates, which after being sacked and drained retained 15% water, making a loss of 0.75 tons of water per 24-hour day. The water remaining in the zinc concentrate caused a further loss of 3.75 tons of water per day, leaving 214,900 gallons discharging through the main launder,

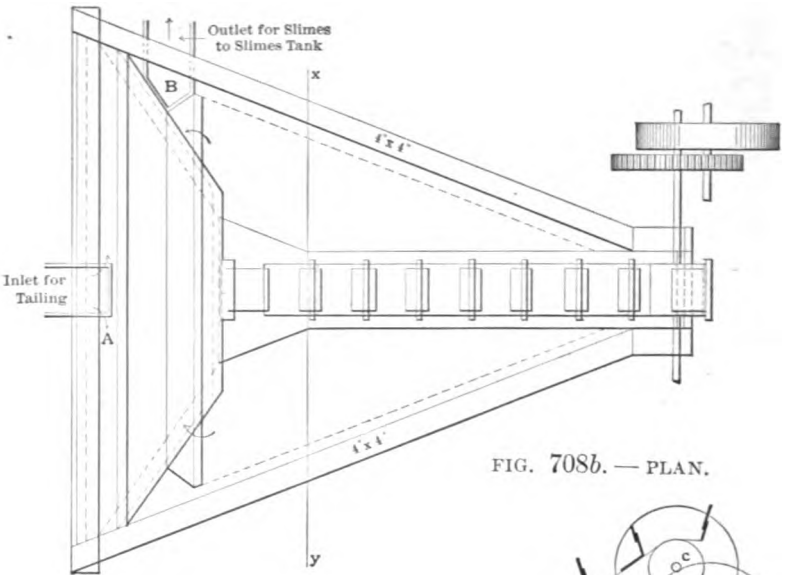

FIG. 708*b*. — PLAN.

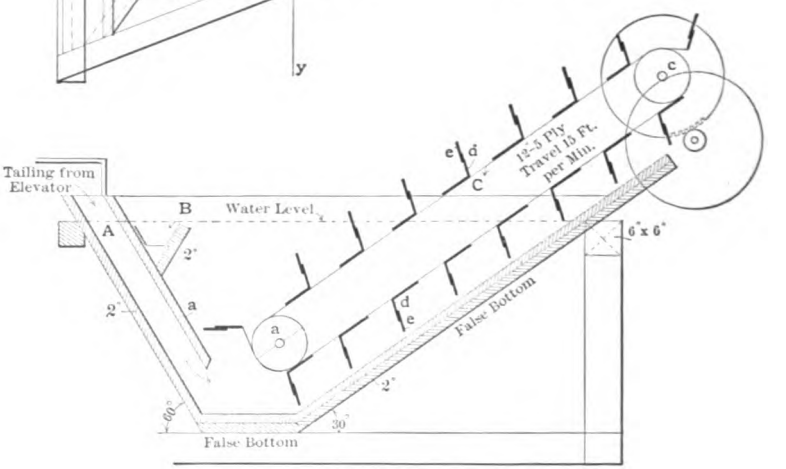

FIG. 708*a*. — SECTION OF SCOBEY SAND BOX.

the recovery of which is the question at point. The sands were separated from the slime water in a sand-settling tank. This was in the form of an inverted truncated pyramid, Figs. 708*a* and *b*. Five feet of water fills the tank to within 4 inches of the top. The sides slope 60° toward the bottom and 30° toward the edge up which the sands are dragged. All settled material in the box comes under a drag belt. The settling area of the top of the tank measures 35 square feet. The tailings enter the sand box at the back and are conducted by a false back or baffle to the bottom of the tank. The rising current is sub-

jected to a decrease of velocity which causes it to drop the sand. The overflow water is taken from the surface by a 6-foot weir over the edge, opposite to the sand discharge. The loss in water held by the sands is 12.5 tons per day, which leaves 211,900 gallons of mill water, which is contaminated with 10 tons of slimes. This latter goes to the slime tank.

The slime tank is a standard round tank measuring 16 × 16 feet. It has a false lining which gives the interior the appearance of an inverted cone with sides 60° from the horizontal and truncated at the bottom, in a circle 2 feet in diameter.

Around the upper rim is a 10 by 10-inch peripheral launder. A half-inch batten fastened on the top of the tank assures even discharge at all points on the periphery. In the center of the bottom there is cut a 6-inch hole. This is fitted with a 6-inch tee, to one end of which is fastened a gate valve for emergencies, and to the other, by means of a reducing nipple, a 2-inch hose. This hose is carried past the chime and raised 8 feet, its end being fitted with a wooden plug in the center of which is a half-inch nipple. The pulp enters the tank through a 12 by 12-inch pipe, passing down at the center to the bottom. The discharge pulp carries 2 parts of water to 1 of slime. This is further treated in a 6 by 8 by 6-foot V-shaped box, giving finally a loss of 10 tons of water per day. The losses summed up are 6,480 gallons. The estimated total loss is 6,500 gallons, giving a loss of 3%. Scobey noticed that where apparently muddy water was flowing over a wide weir, there was in reality a thin film of clear water on the surface. In the case of the 16-foot tank, 209,500 gallons of water was clarified in 24 hours. This was discharged over a weir equivalent to 50 feet. Such a weir would have then only 0.1875-inch head, giving the water a velocity of approach of 0.42 foot per second.

Scobey considers these figures important. He claims that such good work is not possible with a tank where the discharge is from a 12-inch opening, as is the case in the South African settling-tank system described in the previous article.

In this case the velocity of approach would be 1.6 feet per second with a head of 2.4 inches, and the discharge would be drawn below what he calls the "safe film." This indicates that the depth of the discharge may be more important than the velocity of discharge. While this may be true, the importance of the velocity of the current rising in the tank should not be overlooked. In the case of the tanks mentioned above this rising velocity amounted to about 1 millimeter per second, which is not excessive and indicates a maximum quartz grain of about 0.03 millimeter diameter in the overflow.

§ 1153. At Mill 173, six pulp thickeners[21] are used, each a cylindrical tank 10 feet in diameter, 18 feet deep with hopper bottoms, converging to a point in the center just below the feed pipe. The water constantly overflows at the top and is saved for use in the mill. The water recovery is 87.5%. The ratio of solids in tailings leaving the mill is 1 in 16. The settling room in the tanks per ton of material treated is; for coarse material, 0.612 cubic feet; for fine, 1.380 cubic feet; and for slime, 42.112 cubic feet. The ratio of solids in the tailings leaving the tank system is 1: 1.4. This type of settling tank has been largely developed at Morenci, Arizona.

§ 1154. Use of Chemicals for Slime Settling. — For an analysis of the phenomena of sedimentation of slimes, we recognize two distinct processes.[61] In one, material may be coagulated and sedimented by being mechanically absorbed or held by some precipitate which is produced in a liquid containing the suspension, such as might be done, for example, by producing a calcium carbonate precipitate in water in which silica was suspended. This kind of sedimentation is to be left out of account in connection with the other method

on which the recent studies of colloidal suspensions have thrown much light. The general rules are as follows.

Matter suspended in water acts as if it were statically charged with electricity. In some cases the charge seems to be negative and in others positive, as compared to the water. Therefore, when a suspension or a slime is subjected to the electrical current, the particles move in one or the other direction, depending on their charge. If seems that a neutralization of these charges causes sedimentation or coagulation of the slime, and this neutralization of charge can apparently be brought about in several ways.

1. A suspension which moves in the positive direction with the electric current has been found to coagulate one which moves in the negative direction, while two which move in the same direction do not coagulate each other.

2. It has also been found that the positive ions of salts cause the coagulation of the negative suspensions, while the negative ions of salts coagulate the positive suspensions (that is, those which move in the direction of the positive current). Certain numerical relationships have been discovered between the coagulating powers of the different ions of the same kinds. For example, all monovalent positive ions, such as sodium, potassium, etc., have a feeble coagulating power. The bivalent ions, zinc, barium, calcium, strotium, etc., have a much more powerful effect, while the trivalent ions like iron, aluminum, chromium, etc., have a still more marked effect. The relation between these powers for the three groups are approximately as 1:30 :1000. This same order of magnitude has been found to hold in the case of negative ions like chlorine, SO_4, etc., in the precipitation of those suspensions which move under the influence of the current as though they were positively charged. As a suspension or slime of powdered asbestos was, in a certain case, found to move in the opposite direction under influence of the current from that taken by a suspension of pure quartz, it is evident that a knowledge of the direction of migration of a particular slime ought to be obtained in order to learn which materials to use to coagulate it. It is true, however, that by far the larger proportions of slimes migrate with the negative current — that is, they appear to be negatively charged particles and are coagulated by positively charged ions. In such cases the trivalent ions are more powerful than the bivalent, and these in turn than the monovalent, but the bivalent salts, such as calcium, are exceedingly cheap compared with the trivalent, and in the case of most slimes only small amounts of salt are necessary, so that lime often becomes the most available precipitant.

§ 1155. In commenting upon the above, C. D. Demond [14] states that the electrolytic dissociation theory does not seem to fit the fact that if the precipitating power of an univalent ion is 1, that of a bivalent ion is about 30, and that of a trivalent ion 1,000, these figures being all out of proportion to the ionic charges of electricity. Neither does it fit the fact that a certain Virginian city slime after thorough washing in clean water, to remove all soluble salts, will still settle more rapidly and compactly in distilled water than in any solution that has been tried, either acid or alkaline. Whitney [36] recognizes the probable influence of surface tension, which is the explanation given on page 1149 of Ore Dressing. Porter ("Properties and Tests of Fullers' Earth") in contributions to Economic Geology, U. S. G. S. Bull. 315, p. 282, says, that as a certain amount of water is essential to the colloidal state, heating to a point at which combined water is driven off must in all cases destroy this state. It might possibly be that the settling effect of heating slimy water is due to partial dehydration of the colloid; although a change in surface tension seems a more probable explanation.

§ 1156. H. S. Nichols [55] has made a very careful study of the question of

settlement of slimes and has drawn some very interesting conclusions from his work with regard to the relative effects of temperature and electrolytes. Nichols concludes: Thin pulp may be settled either by heat or by electrolytes, but the former is the more potent. Thicker pulp may be settled either by heat or by electrolytes, but the latter is the more potent. In thick pulps containing higher than 15% of solid matter, the effect of both the addition of electrolytes and the increase of temperature becomes rapidly obscured.

These conclusions are explained as follows:

In thin pulps, repulsion of particles and counteracting of gravity, due to the electrostatic condition, are reduced by diffusion, the particles being farther removed from one another, and therefore any cause affecting the relative densities of the solid and liquid constituents of the pulp would produce more marked effect than that affecting the electrostatic condition.

In thicker pulps any cause counteracting the repulsion due to the electrostatic condition would be more and more potent, as the particles are crowded in closer proximity to one another.

As the pulp increases in density and free falling is interfered with, the settling effect produced by electrolytes becomes steadily greater than that produced by a reduction of the specific gravity of the liquid medium through an increase in temperature.

The economic use of electrolytes is limited, and it may therefore be assumed that the addition of any electrolyte will produce an effect limited in degree, and as the repulsive force due to the electrostatic condition is rendered more operative by closer packing of the solid particles, such electrolytes will become inefficient and finally of no avail when the pulp is very thick. This fact is further testified to as follows.

Increase of temperature always produces a more compact settlement than addition of electrolytes, for in the final stage of packing, settlement is assisted, though very slowly, by the slightest variations in the densities of solid and liquid. The case may be diagrammatically represented as shown in Fig. 709. With a given electrostatic charge or difference of potential, the force required to overcome repulsion *a* may be taken as 1, and the addition of an electrolyte capable of modifying ionization to this extent will settle row No. 5 at once and will help to settle succeeding lower rows in reduced ratio. Row No. 1, however, can never in any case be retarded in settlement by the electrostatic condition, and hence by removing this bottom row, not only is force *d* done away with, but the reaction *c* assists the settlement of row No. 2 and so on.

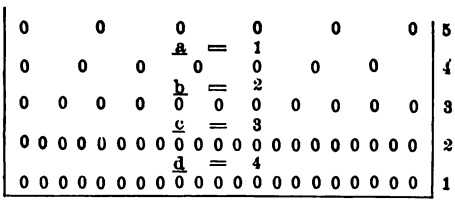

FIG. 709. — DIAGRAM ILLUSTRATING THE EFFECT OF ELECTROLYTES IN SETTLING SLIME.

By a series of tests Nichols has thus shown that the removal of the solid particles as they settle does produce more or less uniform results (temperature being constant) in pulp of any density.

Previous agitation, temperature, and diffusion, or state of density, make great difference in settlement in the same material. With the fine clay slime used in these tests, a pulp containing less than 1% of solids would not be clear for several days alone, but with the addition of an electrolyte settled almost at once. Again, a pulp containing 2.5% solids, which settled 130 millimeters in 4 hours after being heated at 200° Fahrenheit and violently agitated, showed no signs of settling after 48 hours.

§ 1157. PRECIPITATING AGENTS. — As has already been stated by Whitney,[35] lime is most extensively used where the use of a precipitating agent is required. Authorities vary as to the procedure required for the success of the operation. J. R. Williams,[6] of the Crown Reef Gold Mining Company, adds milk of lime to the slimes from the separating plant and obtains very satisfactory results. An automatic lime feeder is used, as too much lime interferes with the subsequent precipitation of the gold. The slimes are settled in three large spitzkasten, two 20 × 20 × 10 feet and the third 40 × 40 × 10 feet, the slimes being pumped from the bottom of these tanks to the treatment tanks. In this case ½ pound or less of lime is added to each ton of pulp treated. Caldicott states that with suitable spitzkasten 0.003% of alkali or 0.0021% quicklime is sufficient to insure settling. The amount usually added varies from 2 to 20 ounces of lime per ton of pulp, which may amount to from 3 to 10 pounds of lime per ton of dry slimes. The slimes are collected into large flocculæ which settle rapidly. In the gold mills the usual practice seems to be to add lime to the batteries, but at Mill 106 a special stamp is used to crush the lime, as it has been found that the size of the crushed particle is an important factor in the success of the settling operation. By adding lime in this way, the alkalinity of the water becomes 0.005 to 0.05%.

It is not essential that the material should be acid in order to settle with lime,[16] but excess alkalinity must be avoided, as too much lime is as bad as not enough. The addition, therefore, of lime to material to be cyanided must be made with caution.

In the Arizona copper mills the copper sulphate and sulphuric acid leached from the ore dissolves jig screens and precipitates copper in the trommels, clogging them. To avoid this, lime is slacked and a measured amount fed in with the ore to neutralize the acidity above mentioned. An excess is of course avoided as this gives trouble on the Wilfley tables.

The tailings from the West Yankee Mill are made to travel a circuitous course, and every effort is made to clarify the water, but owing to the large amount of slime it is next to impossible to return clear water.[26] It has been found that if milk of lime is introduced into the tailings launder it neutralizes the free acid and precipitates the dissolved metallic salts as flocculent hydroxides. These flocculæ catch up the small particles of alumina and silica, and carry them down, leaving the water comparatively clear. A little soap solution, added with the milk of lime, accentuates the precipitation by causing larger flocculæ. The addition of lime to the water also saves the iron parts of the mill by preventing corrosion. It is also used by the Arizona Copper Company and the Shannon Copper Company.

M. D. Stackpole[46] states that the value of a settling agent depends upon the character of the slimes to be treated. He found that a slime recently treated by him settled but slowly with lime, but settled rapidly with either sulphuric acid or salt. It was also discovered that after roasting the pulp the slimes settled rapidly with the sands in the first two compartments of the settling tanks, leaving the water perfectly clear. He notes that the addition of lime causes a very objectionable foaming, this foaming apparently being in direct proportion to the amount of lime added.

In certain cases[48] where filter pressing proved out of the question and agitation and flocculation with lime also failed, the sprinkling of 2½ gallons of finely pulverized lime over the surface of a 30-foot tank was found to make a perfect sedimentation of slimes in one hour.

The Kennicutt system[32] of softening water for use in steam boilers consists in adding solutions of soda and lime to the water to be treated and then passing the water through a suitably constructed settling tank. The results of a treatment of this sort are shown in Table 494.

TABLE 494. — ANALYSIS OF WATER BEFORE AND AFTER TREATMENT IN KENNICUTT APPARATUS.

	Before.	After.
Silica	0.79%	0.40%
Carbonate of lime	9.86	None.
Hydrate of lime	None.	3.45%
Carbonate of magnesium	3.51%	None.
Hydrate of magnesium	None.	0.20%
Sulphate of magnesium	7.03%	None.
Carbonate of soda	1.12	0.29%
Sulphate of soda	4.70	7.80
Chloride of soda	16.48	14.49
Total solids	43.49	26.63
Incrusting solids	21.19	4.05

In experimenting with material upon which both the decantation and filter pressing processes had failed, Argall [45] found that, after roasting, the slime settled readily in the cyanide solutions. In fact, after shaking, the solution would become clear in three minutes. Further experiments showed that the addition of one pound of sulphuric acid per ton destroyed colloidal substances to such an extent as to cause the slimes to settle at the rate of 5 feet in 12 hours instead of 5 inches in 24 hours. The extraction was, however, found to be lowered upon cutting down the percent of acid.

Distributing Devices.

§ 1158. The Dimmick Classifier. — The Dimmick Classifier [56] is a V-shaped tank, with the bottom of the V acting as a base. It is made of sheet steel and measures 16 feet long, 10 feet high, and 9 feet wide at the top. The ends are perpendicular to the lower edge. A vertical partition with an adjustable gate at the bottom divides the classifier into two equal parts. It classifies the pulp by allowing the grains to fall in a gradually moving current of water. The heavy grains drop out first, the lighter ones following.

The pulp is delivered to one end of the classifier and is directed against one of the sloping sides. The coarser sands pass at once to the bottom and the finer ones gradually settle as the current drags them along. Those that are not deposited in the first compartment are forced through the gate to the other. This gate is adjustable from the surface so any desired opening may be had while the classifier is in operation. Along the sides, near the bottom of the classifier, are placed jig cocks 2 feet apart. Between these cocks are placed partitions extending from the bottom of the tank as high as the openings in the central partition. By this arrangement the particles that by their superior weight get below the small partitions must stay there and pass out by their respective cocks in that compartment, and so on. The fine particles that have not settled in the first half of the classifier are carried through the gate to the second compartment where the same operation takes place. The carrying current decreases in the second part of the classifier, and very little, if any, current is noticed at the lower end. Under these conditions the finest slimes settle out. The water is clear in the second part of the classifier for about 2 feet from the top, showing the perfect settlement of the slimes.

§ 1159. Distributing or Sizing Launder. — The Dimmick Sizing Launder [39] built by J. O. Dimmick & Son, is a device whereby a stream of pulp, flowing in a launder with a bottom sloping downward toward both sides from the center, is subjected to a classifying action and prepared for subsequent concentration. As a result of the shape of the launder bottom the heavier particles of pulp, which always occupy the bottom, gravitate down the slopes, toward the sides, so that the coarsest material is constantly crowded against

the side and bottom in passing. At intervals in the side boards of the launder, opposite each other, openings for gates are cut. These openings are placed in front of and connecting with a race or sluiceway, cut into the beveled bottom of the launder. The race or sluiceways are of the same width as the gate openings and extend tangentially from the center apex of the bottom backward and sideward to the gate openings, the cut commencing at the center apex of the bottom, and increasing in depth on a true, even slope to the gates. The gate openings are covered by adjustable sliding gates which allow any desired amount of material to be drawn off, and always the coarsest in the first two gates, the next finest in the next two, and still finer in the third, while the very fine and slimes will pass on through, the coarser having been eliminated in graduated sizes, and by placing separate launders under the respective gate openings are taken separately to the concentrating tables.

The inside of the side boards is fitted with strips lengthwise, on which comb precipitators rest, and can be moved backward and forward on the strips to the point desired just in front of the sluiceways in the bottom and thus held in place by eccentric buttons above them on the sides. These comb precipitators consist of a series of pins staggered, and serve to arrest the motion of the pulp, and throw the particles to the bottom so that they may be drawn out into the sluice.

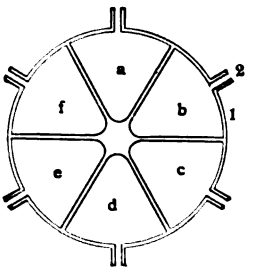

FIG. 710*b*. — SECTION SHOWING POCKETS.

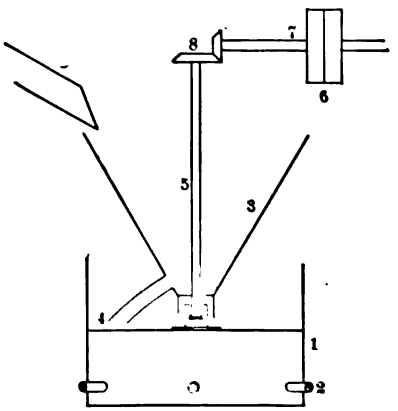

FIG. 710*a*. — MECHANICAL DIVIDER.

§ 1160. REVOLVING DISTRIBUTOR OR DIVIDER. — Figs. 710*a* and *b* show a form of mechanical divider which might be useful where it is desirable to divide a product between a number of machines assuring an equal feed to each. The device consists of a cylindrical tank (1) divided by suitable partitions into several equal compartments, *a*, *b*, *c*, *d*, *e*, and *f*, each furnished with a spout (2) which serves to deliver its product to the machine for which it is intended. Revolving above the pockets or compartments *a*, *b*, *c*, *d*, *e*, and *f* is a conical hopper (3) with one discharge spout (4). This hopper is secured to and revolves with the vertical shaft (5), which is actuated, in turn, through the tight and loose pulleys (6), shaft (7), and bevel gears (8). Pulp is conducted into the revolving hopper by way of the spout (9) and, as the hopper revolves, is divided into as many equal parts as there are compartments in the tank (1). Thus, if we have six jigs treating the same product, the device just described serves to give to each jig its proper share of the feed. If, moreover, it becomes necessary to shut down one jig, by plugging the discharge spout leading to that jig, the load can be divided fairly evenly between the remaining machines.

BIBLIOGRAPHY OF CLASSIFIERS.

1. Cushman, A. S. Bulletin 92, United States Department of Agriculture, Bureau of Chemistry. Effect of water on rock powders.
2. Cushman, A. S., and Prevost Hubbard. Bulletin United States Department of Agriculture. The decomposition of the feldspars.
3. De La Coux. Industrial Uses of Water. Translated by Morris. Beringer and Stingls Slime Settling Tank.
4. Collett. Water softening and purification. Beringer and Stingls slime-settling tank.
5. Mineral Industry, Vol. IX., p. 732. The Ayton intermittent thick pulp extractor.
6. Rose. "Gold." Edition (1901), p. 336, Edition (1902), p. 330. Use of milk of lime for slime settling.
7. *Am. Inst. Min. Eng.*, Vol. XXXIV., (1904), p. 585. C. W. Merrill. The metallurgy of the Homestake Ore.
8. *Ibid.*, Vol. XXXV., (1905), p. 624. John Gross. Cyanide practice at the Maitland properties, South Dakota.
9. Burgan, A. L. Hubbell, Michigan. Private communication and blue-print of Burgan classifier.
10. *Chemical Engineer*, September, 1906, p. 203. The Ultra-microscope.
11. Colorado Iron Works Company, Denver, Colorado. Catalogue containing description of two forms of slime tanks.
12. *Ibid.* Catalogue 7E. Description of double-cone classifier.
13. DeKalb, Courtenay, Los Angeles, California. Private communication with regard to perforated board classifier.
14. Demond, C. D., Anaconda, Montana. Private communication with regard to slime settling.
15. Denver Engineering Works Company, Denver, Colorado. Catalogues describing Richards-Shepard Spitzkasten, also Richards' pulsator classifier.
16. *Eng. & Min. Jour.*, Vol. LXXV., (1903), p. 372. C. W. Merrill. Cyanidation at the Homestake Mine.
17. *Ibid.*, Vol. LXXVI., (1903), p. 538. W. J. Sharwood. What constitutes a slime.
18. *Ibid.*, p. 619. H. S. Denny. Slime treatment on the Rand.
19. *Ibid.*, p. 650. Courtenay DeKalb. What constitutes a slime.
20. *Ibid.*, p. 891. J. C. Scobey. Economy in mill water.
21. *Ibid.*, Vol. LXXVII., (1904), p. 1045. Dwight E. Woodbridge. Ore dressing at Cananea.
22. *Ibid.*, Vol. LXXVIII., (1904), p. 579. Editorial. Tube mill and filter press.
23. *Ibid.*, p. 703. Herbert A. Megraw. What is a slime? Discussion of slime question.
24. *Ibid.*, pp. 945 to 948. T. A. Rickard. Copper mines of Lake Superior. Milling practice.
25. *Ibid.*, Vol. LXXIX., (1905), p. 333. W. A. Prichard. Definition of slime.
26. *Ibid.*, p. 1089. F. H. Probert. Concentration of copper ore.
27. *Ibid.*, Vol. LXXXI., (1906), p. 92. J. H. Collins. Definition of slime.
28. *Ibid.*, p. 380. Editorial. Definition of slime.
29. *Ibid.*, Vol. LXXXII., (1906), p. 969. C. W. Goodale. Ore dressing at Butte.
30. *Ibid.*, p. 1217. Recent Innovations in Rand metallurgical practice.
31. *Ibid.*, Vol. LXXXIII., (1907), p. 1251-2. R. H. Richards. Undercurrent for saving black sands.
32. *Engineering News*, Vol. XLVII., (1902), p. 386. The Kennicutt system of water softening.
33. Fried. Krupp Grusonwerk. Magdeburg Buckau, Germany. Private communication.
34. Goodale, C. W., Boston and Montana Consolidated Copper and Silver Mining Company. Great Falls, Montana. Private communication.
35. *Jour. Am. Chem. Soc.*, November 1, 1900, p. 842. Whitney and Ober. The Colloidal theory of slimes.
36. *Ibid.*, March, 1907, p. 328. W. R. Whitney. Use of chemicals for settling slimes.
37. *Jour. Chem. Met. & Min. Soc. of South Africa.*, Vol. VII., (1906-07), p. 185. G. Caetani and E. Burt. Treatment of gold ores in dry districts.
38. *Ibid.*, p. 217. W. A. Caldecott. Colloidal silicic acid in slimes.
39. McCabe, P. B. & Co., Los Angeles, California. Catalogue of New Standard Classifier.
40. *Ibid.* Private communication.
41. C. W. Merrill, Lead, South Dakota. Private communication.
42. *Mines & Minerals*, Vol. XXVI., (1905-06), p. 346. A. S. Atkinson. Facts with regard to Lake Superior milling practice.
43. *Mining Reporter*, May 28, 1903, p. 490. Slime Settling and Classifying by the Sherman System.
44. *Min. & Sci. Press*, Vol. LXXXVIII., (1904), p. 210. F. W. Sherman. Wet concentration of ores by the Sherman system.

45. *Ibid.*, Vol. XC., (1905), p. 357. P. Argall. Settling power of roasted slimes.
46. *Ibid.*, p. 358. M. D. Stackpole. Note on slime settling.
47. *Ibid.*, Vol. XCI., (1905), p. 123. Geo. E. Binckley. An Experience in Water Recovery.
48. *Ibid.*, p. 135. Note with regard to slime settling.
49. *Ibid.*, p. 238. Note with regard to slime settling.
50. *Ibid.*, p. 293. E. A. H. Tays. Discussion of slime settling by the Binckley system.
51. *Ibid.*, p. 359. O. P. Findley. Water consumption at Cananea.
52. *Ibid.*, p. 449. J. M. Callow. Classification as applied to the concentration of finely crushed ore.
53. *Ibid.*, Vol. XCIII., (1906), p. 473. M. P. Boss. Definition of slime.
54. *Ibid.*, p. 696. C. W. Goodale. Water consumption in Butte, Montana mills.
55. *Ibid.*, Vol. XCVII., (1908), p. 54. H. S. Nichols. Settling of slime.
56. Mine & Smelter Supply Company, Denver, Colorado. Catalogues describing Dimmick and Swain classifiers.
57. Rogers, A. H., New York. Private communication.
58. Sherman, F. W., Salt Lake City, Utah. Private communication.
59. Utah Mining Machinery Company, Salt Lake City, Utah. Catalogue of Callow tanks.
60. *Ibid.*, Private communication.
61. Whitney, W. R. Private communication.
62. *West. Chem. & Met.*, Vol. I., (1905), p. 50. A. W. Warwick. Metallurgy of finely ground slimes.

CHAPTER XXXIII.

LAWS OF CLASSIFYING BY SETTLING IN WATER.

§ 1161. Free and hindered settling have been defined in Vol. I., page 464, and after the discussion contained in the previous chapter the differences existing between these two distinct modes of settling should be sufficiently clear without further explanation at this point. The general principles of free settling as outlined on the above-mentioned page also apply in the case of hindered settling.

§ 1162. VELOCITY OF SETTLING UNDER FREE-SETTLING CONDITIONS. — Upon pages 465 to 471 of Vol. I., Ore Dressing, will be found an account of the earlier tests made by the author for determining the settling velocities of some of the chief economic minerals. Tables 259 and 260 give the settling velocities of thirteen different minerals varying in specific gravity from 1.473 for anthracite to 8.479 for metallic copper. The range of sizes used for these experiments extended between the limits of 1.84 millimeters and 0.119 millimeter. Table 259 gives the velocities of the fastest grains and Table 260 the velocities of the slowest grains. These results were further checked by a tubular classifier investigation, the results of which are given in Table 262.

The author has since undertaken a series of tests calculated primarily to extend the work mentioned above. A. Sidney Warren and M. L. Nagel undertook the investigation for the coarser sizes, from 12.85 millimeters down to 2.05 millimeters. Their work, because of its increased number of observations and consequent better averages, called for a revision of the former work. G. A. Barnaby and Ralph Hayden took up the work at 2.49 millimeters and carried it down to 0.28 millimeter, covering the field very minutely. The portion of the field between 0.48 millimeter and 0.03 millimeter was undertaken by E. S. Bardwell. The complete results obtained are given with suitable interpolations in Table 638 in the Appendix. As the methods of conducting these tests have been fully discussed in the author's paper entitled "Velocity of Galena and Quartz Falling in Water," [1] they will not be taken up in detail here.

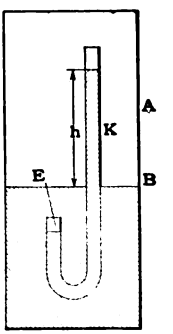

FIG. 711. — COLUMN OF WATER TO SUPPORT A CUBE OF MINERAL.

§ 1163. *Discussion of Results.* — In Table 495 we have the summing up of the work of all three fields re-computed to the uniform basis of millimeters a second for velocity. We have also a mathematical computation of the rate of fall and the ratio between this theoretical and the actual rate of fall.

Discussing these results mathematically from the point of view taken by Rittinger, we have, in Fig. 711, a jar A, with water in it up to B; K, a U-tube with a square section, which we will call D meters square inside section. Upon the lower end is a cube of mineral, E, D meters cube; and within the tube is a column h, of water just high enough to balance the weight of the cube E. Then D is the width of the cube of mineral in meters.

TABLE 495. — VELOCITY OF SETTLING OF PARTICLES OF GALENA AND QUARTZ, UNDER FREE-SETTLING CONDITIONS.

By Warren and Nagel — Average velocities are of 100 observations.

Diameters of Grains, Millimetres.			Galena Velocities.			Compt. Vel'cty V.	Ratio Average Divided by Compt. f.	Quartz Velocities.			Compt. Vel'cty V.	Ratio Average Divided by Compt. f.
Thro. mm.	On mm.	Av. mm.	Max. mm. Sec.	Min mm. Sec.	Aver. mm. Sec.	mm. Sec.		Max. mm. Sec.	Min. mm. Sec.	Aver. mm. Sec.	mm. Sec.	
12.85	11.01	11.93	1201.	647.	934.	1235.	0.7576	489.	271.	393.	621.5	0.6325
11.01	9.51	10.26	1016.	647.	865.	1142.	0.7576	489.	252.	361.	576.	0.6269
9.51	7.79	8.65	956.	678.	810.	1052.	0.7704	489.	231.	340.	532.	0.6390
7.79	6.85	7.32	895.	546.	729.	968.	0.7519	489.	227.	303.	487.5	0.6219
6.85	5.97	6.41	841.	506.	680.	906.	0.7512	416.	185.	289.	455.2	0.6349
5.97	4.95	5.46	793.	489.	631.	836.	0.7547	362.	172.	260.	421	0.6173
4.95	4.21	4.58	713.	372.	558.	765.	0.7299	345.	153.	240.	385.	0.6242
4.21	4.12	4.17	678.	393.	538.	731.	0.7353	345.	154.	225.	368.	0.6116
4.12	2.83	3.48	647.	382.	513.	671.	0.7634	307.	154.	209.	338.2	0.6179
2.83	2.82	2.83	525.	344.	450.	607.	0.7407	256.	127.	191.	303.	0.6305
2.82	2.05	2.44	546.	321.	420.	557.	0.7535	252.	119.	168.	280.5	0.5988

By Barnaby and Hayden — Average velocities are of 100 observations.

2.49	2.06	2.28	555.	278.	442.	539.5	0.8197	238	89.	166.7	272.	0.6135
2.06	1.63	1.85	555.	227.	370.	486.	0.7622	227.	71.	146.6	244.5	0.5988
1.63	1.46	1.55	417.	185.	330.5	445.	0.7435	192.	68.	126.6	224.8	0.5634
1.46	1.27	1.37	384.	167.	295.1	418.	0.7067	173.	82.	118.4	218.2	0.5435
1.27	1.10	1.19	332.	179.	270.1	390.	0.6935	156.	69.	105.6	210.5	0.5082
1.10	0.97	1.04	332.	161.	252.5	364.	0.6944	147.	64.	94.5	203.5	0.4604
0.97	0.84	0.91	312.	147.	227.5	341.	0.6667	119.	43.	84.1	171.7	0.4902
0.84	0.68	0.76	278.	109.	207.8	311.5	0.6667	114.	40.	76.7	157.	0.4890
0.68	0.57	0.63	263.	139.	192.8	283.5	0.6788	89.	36.	67.2	146.	0.4608
0.57	0.45	0.51	238.	82.	160.4	255.	0.6329	78.	32.	52.7	129.	0.4090
0.45	0.36	0.41	179.	75.	126.1	229.	0.5495	61.	27.	41.2	115.2	0.3571
0.36	0.28	0.32	152.	55.	103.1	202.	0.5102	47.	15.	31.9	101.7	0.3135

Abbreviations:
Aver. = Average.
Compt. = Computed.
Max. = Maximum.
Mim. = Minimum.
Thro. = Through.
Vel'cty = Velocity.

By Bardwell, elutriation test — Average diameters are of 10 microscopic fields.

Galena Diam., mm.			Vel'cty	Compt. Vel'cty V.	Ratio Average Divided by Compt. f.	Quartz Diameter, mm.			Vel'cty	Compt. Vel'cty V.	Ratio Average Divided by Compt. f.
Largest	Smallest.	Average.	mm. per Second.	mm. Sec.		Largest.	Smallest.	Average.	mm. per Second	mm. Sec.	
0.480	0.138	0.345	125.	209.5	0.5970	0.509	0.243	0.369	41.67	109.5	0.3802
0.426	0.119	0.279	111.1	189.0	0.5882	0.413	0.163	0.305	34.48	99.5	0.4202
0.409	0.0764	0.215	88.5	165.8	0.5344	0.339	0.144	0.234	28.57	87.1	0.3279
0.321	0.0523	0.160	74.6	145.5	0.5128	0.321	0.130	0.199	24.39	80.4	0.3030
0.254	0.0445	0.127	62.9	127.2	0.4717	0.298	0.103	0.182	20.41	77.0	0.2653
0.215	0.0296	0.106	52.6	116.2	0.4717	0.254	0.0827	0.156	17.24	71.1	0.2427
0.201	0.0273	0.0967	43.5	111.0	0.3922	0.252	0.0655	0.135	14.49	66.1	0.2193
0.187	0.0242	0.0839	37.0	103.5	0.3571	0.249	0.0803	0.126	12.05	64.0	0.1883
0.165	0.0179	0.0798	31.3	100.1	0.3125	0.237	0.0679	0.121	10.20	62.7	0.1626
0.184	0.0157	0.0714	26.3	95.2	0.2762	0.219	0.0655	0.116	8.55	61.3	0.1395
0.115	0.0195	0.0667	22.2	92.3	0.2404	0.235	0.0569	0.112	7.14	60.3	0.1183
0.0879	0.0125	0.0599	18.5	87.9	0.2105	0.168	0.0608	0.0912	6.02	54.4	0.1111
0.0946	0.00884	0.0572	15.6	85.6	0.1821	0.158	0.0429	0.0846	5.05	52.4	0.0904
0.0853	0.00780	0.0535	13.0	82.6	0.1575	0.147	0.0414	0.0800	4.26	50.9	0.0840
0.0827	0.00832	0.0484	11.0	78.4	0.1403	0.120	0.0364	0.0747	3.57	49.3	0.0725
0.0684	0.00624	0.0437	9.26	74.6	0.1241	0.0972	0.0387	0.0689	3.00	47.3	0.0635
0.0764	0.00676	0.0419	7.75	73.1	0.1059	0.0970	0.0315	0.0629	2.52	45.1	0.0558
0.0741	0.00546	0.0401	6.49	71.6	0.0906	0.0918	0.0317	0.0555	2.12	42.4	0.0500
0.0653	0.00520	0.0390	5.46	70.6	0.0774	0.0842	0.0200	0.0503	1.78	40.4	0.0441
0.0552	0.00419	0.0354	4.59	67.2	0.0683	0.0718	0.0164	0.0478	1.50	39.4	0.0380
0.0499	.....	0.0311	3.86	62.9	0.0614	0.0715	0.0138	0.0425	1.26	37.1	0.0340
0.0440	.....	0.0284	3.25	60.2	0.0541	0.0660	0.0109	0.0377	1.06	35.0	0.0303
0.0431	.....	0.0259	2.72	57.6	0.0473	0.0629	0.0109	0.0344	0.887	33.4	8.0265
0.0419	.....	0.0235	2.29	55.4	0.0413	0.0611	0.00806	0.0319	0.746	32.1	0.0230
0.0408	.....	0.0219	1.92	53.0	0.0362	0.0530	0.00962	0.0282	0.627	30.25	0.0207
0.0394	.....	0.0205	1.61	51.7	0.0312	0.0543	0.00780	0.0267	0.526	29.45	0.0179
0.0301	.....	0.0193	1.36	49.6	0.0274	0.0462	0.00868	0.0253	0.442	28.6	0.0155
0.0267	.....	0.0176	1.14	47.4	0.0241	0.0462	0.00666	0.0232	0.372	27.4	0.0136
0.0305	.....	0.0160	0.959	45.2	0.0212	0.0394	0.00419	0.0209	0.313	26.05	0.0120
0.0233	.....	0.0149	0.806	43.6	0.0185	0.0408	0.00326	0.0188	0.262	24.7	0.0106
0.0193	.....	0.0141	0.676	42.4	0.0159	0.0323	.....	0.0182	0.220	24.3	0.00905
0.0230	.....	0.0134	0.568	41.4	0.0137	0.0301	.....	0.0161	0.185	22.85	0.00810
0.0226	.....	0.0128	0.478	40.5	0.0118	0.0412	.....	0.0144	0.156	21.6	0.00723
0.0173	.....	0.0112	0.401	37.8	0.0106	0.0403	.....	0.0126	0.131	20.1	0.00709
0.0167	.....	0.00956	0.337	34.95	0.00965	0.0318	.....	0.00884	0.110	16.91	0.00649
0.0166	.....	0.00790	0.283	31.8	0.00890	0.0264	.....	0.00589	0.0924	13.81	0.00668
0.0130	.....	0.00700	0.238	29.9	0.00797	.....	.....	.....	.....	.....	.....
0.0124	.....	0.00593	0.200	27.5	0.00727	.....	.....	.....	.....	.....	.....
0.0104	.....	0.00493	0.168	25.1	0.00670	.....	.....	.....	.....	.....	.....
0.0117	.....	0.00431	0.141	23.42	0.00597	.....	.....	.....	.....	.....	.....
0.0112	.....	0.00330	0.118	20.52	0.00575	.....	.....	.....	.....	.....	.....
0.00745	.....	0.00152	0.0995	13.91	0.00715	.....	.....	.....	.....	.....	.....

δ is the specific gravity of the mineral, 2.65 for quartz, 7.5 for galena.
h is the column of water to balance the grain.
$h = D\ (\delta - 1)$.

Rittinger assumes that because a column h meters high balances the weight of a stationary grain, therefore the velocity due to h, if rising, is able to prevent the grain from falling; or, in other words, it is the velocity of the fall of the grain. On this basis he tells us from the formula $V = \sqrt{2gh}$ when $g = 9.8024$ meters, $\sqrt{2g} = 4.42773$ meters, that the velocity V of settling in water of grains of minerals is

$$V = C\sqrt{D\ (\delta - 1)}$$

where C is a constant.

$C = 2.44$ for average grains,
2.73 for roundish grains,
2.37 for long grains,
1.92 for flat grains.

Rittinger's C seems to be made up of $f\sqrt{2g}$ where f is a factor due to friction.

In Table 495 the column marked "Computed velocity" is obtained from Rittinger's formula $V = 2g\sqrt{D\ (\delta - 1)}$, omitting the f. In the column marked "Ratio of computed divided by average," we have a value for f. The value of this factor is practically constant for grains larger than 1.55 millimeters in diameter. For galena it is 0.7558; for quartz, 0.6157. But for grains smaller than 1.55 millimeters in diameter the value of f decreases in a most extraordinary degree. This discrepancy between the values shows that Rittinger's universal formula for all minerals is not universal, and that it needs some added factor which will provide for the differences in specific gravity. This may be overcome for practical purposes by simply determining the factors for different specific gravities, as has been done above for quartz and galena.

G. W. Eastman has kindly made a study of this question, and his line of argument with his conclusions is here given.

In Fig. 712 two curves for quartz and galena were drawn from the average diameters and velocities by using logarithms of the numbers instead of the numbers themselves. The abscissas are the logarithms of D, the ordinates are the logarithms of V. The advantage of the logarithmic curve is its compactness and the ease with which the formulas can be derived from it. A curve made from natural numbers would be many feet long.

The curves show at once two things — that they are practically parallel, and that they are divided in the main into two parts.

The points for the smaller grains, which follow one law (the Law of Viscous Resistance), are on a straight line A. The points for the larger grains, which follow another law (the Law of Eddying Resistance), are also on a nearly straight line, B. Between the two lines A and B is the critical or transition space C.

The derivation of the Law of Viscous Resistance is as follows:

For the case of a small sphere falling slowly through a viscous fluid, Sir G. G. Stokes[2] has deduced from purely theoretical considerations for the terminal velocity V, of the sphere, the following formula:

$$V = \frac{2}{9} g \left(\frac{\delta\ \delta'}{n}\right) r^2$$

where r = radius of the sphere,
g = acceleration due to gravity,
δ = density of the sphere,
δ' = density of the fluid,
n = the coefficient of viscosity or "inner friction" of the fluid, the quantities all being expressed in c-g-s. (centimeter-gram-second) units.

For water at 20° C., $\delta' = 1$, and $n = 0.010$; hence the formula would become

$$V = K\,(\delta - 1)\,D^2, \qquad (4)$$

where the constant K should theoretically be the same (about 550) for particles of all densities; but since it involves n, it would change about 2% per degree for temperatures different from 20° C.

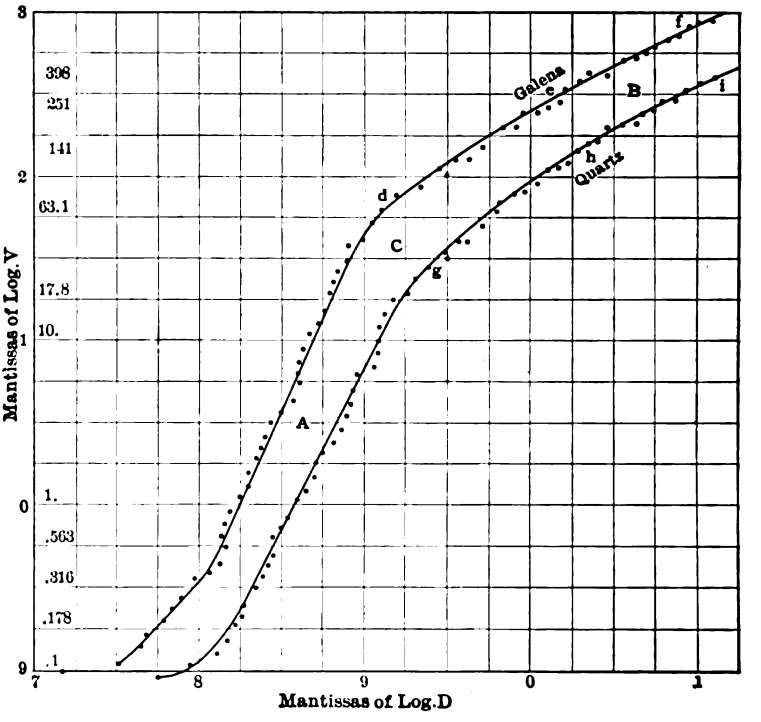

FIG. 712. — LOGARITHMIC CURVES OF AVERAGE VELOCITIES AND DIAMETERS OF THE COMPLETE SERIES.

If V and D are taken in millimeters instead of V and r in centimeters, the formula becomes, by substituting known quantities,

$$\left(\frac{V}{10}\right) = \frac{2}{9}\,0.981\left(\frac{\delta - 1}{0.01}\right)\left(\frac{D}{2 \times 10}\right)^2,$$

or $V = 545\,(\delta - 1)\,D^2$.

For a given substance $(\delta - 1)$ would also be constant; so we should expect to find that the velocity of settling would be simply a constant times the square of the diameter of the particle, or

$$V = K'\,D^2, \text{ where } K' = K\,(\delta - 1),$$

or taking logarithms, we have

$$\log.\ V = \log.\ K' + 2\ \log.\ D.$$

That such a simple law is followed closely by both quartz and galena is shown very clearly by reference to the logarithmic plots, Fig. 712. The points on the lines A lie very strikingly on a straight line, whose slope is nearly 2:1;

that is, log. V is increasing just twice as rapidly as log. D, as it should, according to the formula above. The value of log. K' is the intercept on the V axis (that is, the value of log. V when log. $D = 0$), from which we get readily the values for K' — namely, 700 for quartz and 4,100 for galena. The corresponding values for K in formula (A) would be

$$K = \frac{700}{(2.65 - 1)} = 424 \text{ for quartz,}$$

$$\text{and } K = \frac{4100}{(7.5 - 1)} = 631 \text{ for galena,}$$

values which differ considerably, it is true, but which lie on either side of the theoretical value 550.

The derivation of the Law of Eddying Resistance is as follows: Stokes's equation is derived on the assumption of small velocity and a resistance due entirely to viscosity proper, and it is known not to hold above a certain "critical velocity" when the resistance due to eddying motion set up in the fluid becomes appreciable and important. For such high velocities a complete theory seems to be almost impossible; but Sir Isaac Newton pointed out that the resistance might be expected to vary as the square of the velocity. In other words, $R = k\,V^2$ where R is the resistance to motion, and k is a constant. Evidently when dynamic equilibrium is attained R is just equal to the effective weight of the particle in the liquid. The effective weight has been shown above to be $D\,(\delta - 1)$. Substituting this value $D\,(\delta - 1)$ for R in the equation above, we have

$$D\,(\delta - 1) = kV^2,$$

from which we get, by extracting the square root, Rittinger's formula:

$$V = C\sqrt{D\,(\delta - 1)} \qquad (B)$$

(using C outside the radical in place of $\frac{1}{k}$ inside).

We should expect this to hold only when Newton's law of resistance is followed, and the results indicate that this is more nearly true the greater the velocity; that is, when the true viscous resistance plays a continuously less important part, and the eddying resistance an increasingly important part.

The existence of the "critical velocity" and the transition from the Law of Viscous Resistance (A) to the very different Law of Eddying Resistance (B) is strikingly shown on the plot by the decided change in the slope of the lines for both quartz and galena between the lines A and B. Actually the slope for both quartz and galena does become about $\frac{1}{2}$ from e to f and from h to i. The formulas thus indicated are: for quartz, $V = 113\sqrt{D}$, and for galena, $V = 250\sqrt{D}$. (The data would be represented over a somewhat larger range, g to i and d to f, by the formulas $V = 89\ D^{0.67}$, for quartz, and $V = 240\ D^{0.75}$, for galena).

Bringing in the specific gravities (in other words, finding C for the Rittinger formula), would change these two expressions into $V = 87\sqrt{(\delta - 1)\,D}$, for quartz, and $V = 100\sqrt{(\delta - 1)D}$, for galena. (The constants 87 and 100 would correspond to 2.7 and 3.2 in Rittinger's formula, when V and D are expressed in meters instead of in millimeters.)

We see again a distinct individuality in the constants for the two substances.

The critical velocities are apparently about 63 millimeters a second for galena and 28 millimeters for quartz, and the corresponding critical diameters are about 0.13 millimeter for galena and 0.20 for quartz. Of course, in this neigh-

borhood, neither of the derived formulas will apply very closely. Owing to the decided change here, a simple formula to cover the entire range seems quite out of the question.

It will be noticed that the four or five observations on the smallest galena particles lie a little off the line A, as do also two observations on quartz. It is difficult to see why these cases should deviate from Stokes's law, unless the already very slow settling of the particles is made apparently still slower by slight currents in the water, due to temperature changes, which would be almost unavoidable outside of a well-regulated thermostat or chamber supplied with means of maintaining a constant temperature. An empirical formula could be made to fit these few observations, but it seems hardly necessary. In fact, the values of the velocity over the whole range can be read off from the plot as accurately and more readily than they could be computed from the formulas.

§ 1164. *Summary.* — The above discussion of the experiments thus indicates that two quite different laws are followed by settling particles, depending on whether the velocity is above or below a certain transition or critical point. Below this critical velocity the law is expressed by the formula:

$$V = K\,(\delta - 1)\,D^2 \qquad (A)$$

and above this critical velocity the law is expressed by the formula of Rittinger,

$$V = C\sqrt{D\,(\delta - 1)}. \qquad (B)$$

The values of K indicated by the experimental data are 424 for quartz and 631 for galena; and the values for C are 87 for quartz and 100 for galena.

§ 1165. FREE-SETTLING RATIOS. — Table 496 is given for the purpose of showing the manner in which the free-settling ratio of quartz and galena varies with the different sizes. The average free-settling ratio for quartz and galena is 3.9 to 1. A point of especial interest is the marked drop in the ratio when we pass below the so-called critical point, 0.2 millimeter in the case of quartz and 0.13 in the case of galena. From the formulas of § 1164 the average ratio above the critical point is 5.23 to 1, and below the critical point 2.43 to 1. Here we note a very close agreement between the theoretical values and those obtained by experiment.

TABLE 496. — DIAMETERS, VELOCITIES, AND FREE-SETTLING RATIOS OF QUARTZ AND GALENA.

Velocity mm. Second.	Diameter Average Quartz Grain. Millimeters.	Diameter Average Galena Grain. Millimeters.	Ratio Diameter Quartz Diameter Galena.
393	11.93	1.99	5.995
361	10.26	1.78	5.764
340	8.65	1.62	5.340
303	7.32	1.41	5.191
289	6.41	1.33	4.820
260	5.46	1.10	4.963
240	4.58	0.98	4.673
225	4.17	0.89	4.686
209	3.48	0.77	4.519
191	2.83	0.63	4.492
166.7	2.28	0.533	4.278
146.6	1.85	0.470	3.936
126.6	1.55	0.410	3.780
118.4	1.37	0.314	4.360
105.6	1.19	0.263	4.525
94.5	1.04	0.231	4.502
84.1	0.91	0.198	4.596
76.7	0.76	0.161	4.720
67.2	0.63	0.139	4.533
52.7	0.51	0.106	4.812
41.2	0.41	0.0921	4.452
31.9	0.32	0.0802	3.991
28.57	0.234	0.0752	3.258
24.39	0.199	0.0692	2.876

TABLE 496. — (*Continued*).

Velocity mm. Second.	Diameter Average Quartz Grain. Mlilimeters.	Diameter Average Galena Grain. Millimeters.	Ratio Diameter Quartz Diameter Galena.
20.41	0.182	0.0634	2.870
17.24	0.156	0.0587	2.658
14.49	0.135	0.0545	2.477
12.05	0.126	0.0509	2.475
10.20	0.121	0.0446	2.713
8.55	0.116	0.0429	2.704
7.14	0.112	0.0411	2.725
6.02	0.0312	0.0396	2.303
5.05	0.0846	0.0374	2.262
4.26	0.0800	0.0335	2.388
3.57	0.0747	0.0305	2.449
3.00	0.0689	0.0272	2.533
2.52	0.0629	0.0242	2.599
2.12	0.0555	0.0228	2.434
1.78	0.0503	0.0213	2.361
1.50	0.0478	0.0200	2.390
1.26	0.0425	0.0186	2.285
1.06	0.0377	0.0169	2.231
0.887	0.0344	0.0155	2.219
0.746	0.0319	0.0145	2.200
0.627	0.0282	0.0138	2.044
0.526	0.0267	0.0131	2.038
0.442	0.0253	0.0121	2.091
0.372	0.0232	0.0105	2.210
0.313	0.0209	0.00882	2.370
0.262	0.0188	0.00747	2.517
0.220	0.0182	0.00702	2.593
0.185	0.0161	0.00546	2.948
0.156	0.0144	0.00465	3.097
0.131	0.0126	0.00389	3.256
0.110	0.00884	0.00253	3.494
0.0924	0.00589	.....	.....

§ 1166. THEORETICAL VALUE FOR HINDERED-SETTLING RATIO. — In § 1163 it has been shown that the velocity of mineral grains under free-settling conditions is given by Rittinger's formula $V = C\sqrt{D\ (\delta - 1)}$ where $C = 87$ in the case of quartz, or 100 in the case of galena. We may write this formula $V = C\sqrt{D\ (\delta - L)}$ where L equals the specific gravity of the medium in which settling takes place; 1 in the case of water. As we pass from free settling to hindered settling it is very evident that there is no dividing line, upon one side of which grains are obeying the laws of free settling, and upon the other the laws of hindered settling. The average specific gravity of the sand and water in the sorting column or quicksand column will always vary as the amount of sand varies. It is, therefore, only natural that in the case of hindered settling we should place L equal to the average specific gravity of the material in the sorting column. This, under the usual conditions, has been experimentally determined as 1.5 where the bulk of the sand in the sorting column is quartz. The hindered-settling velocities of quartz and galena may now be determined as follows, applying Rittinger's formula with the proper coefficients.

$$Vq = 87\ \sqrt{Dq\ (2.64 - 1.50)}$$

$$Vg = 100\sqrt{Dg\ (7.50 - 1.50)}$$

Equating velocities we get

$$87\ \sqrt{Dq\ (2.64 - 1.50)} = 100\sqrt{Dg\ (7.50 - 1.50)}$$

or the hindered-settling ratio

$$\frac{Dq}{Dg} = \frac{60{,}000}{8{,}628.66} \text{ or } \frac{6.95}{1}, \text{which, as will be seen,}$$

agrees very closely with the latest determinations made by the author. This value is not in reality a constant, but remains fairly constant until we come to the fine sizes, particularly sizes smaller than 0.2 millimeter. Below this size the ratio may be obtained from the formula $V = K(\delta - L)D^2$, using the proper coefficients, for which see § 1164. The values obtained from this latter formula are rather smaller than those obtained in practice. V in either case gives the average interstitial velocity.

§ 1167. HINDERED-SETTLING TESTS. — Since the appearance of Ore Dressing, several tests have been made on the tubular classifier described in Vol. I., page 611, with the view in mind of obtaining a more accurate ratio for hindered settling. Table 307 on page 617 of Ore Dressing gives the ratio between the grain of quartz and the grain of galena that are equal-settling under hindred-settling conditions, as 5.842: 1.

The latest test, and the one which has given the most satisfactory results, was made upon a tubular classifier similar to the one shown in Fig. 345 of Vol. I., but using a glass tube 6 feet long and bulb of 25 cubic centimeters capacity. The ratio here obtained as the hindered-settling ratio of quartz and galena was 6.9: 1. Below are given the actual ratios contained in a number of the drawings or spigots.

Spigot.	Ratio.	Spigot.	Ratio.
16	6.03	26	6.39
17	6.11	27	8.00
18	6.07	28	6.60
19	6.73	29	7.36
20	7.22	30	6.24
21	6.93	31	6.30
22	6.95	32	6.95
23	6.93	33	6.75
24	7.50	34	6.97
25	6.91	35	5.88
.....	.....	36	6.12

In calculating the average hindered-settling ratio it is of course necessary to leave out of consideration spigots 1 to 12 which are pure galena. The spigots 12 to 16 are omitted in order that the classifier may have time to get into good working condition. The last spigots 37 to 45 are also omitted since they do not show sufficiently the hindered-settling characteristics. The value for the ratio, *i.e.*, 6.9: 1, is then obtained by taking the weighted mean.

Fig. 713 shows a photograph of this run. In the cut the particular points of interest are, first, the range of clean quartz hills occupying the upper right-hand corner of the illustration; second, the range of clean galena hills occupying the lower left-hand corner; and third, the valley between these two ranges. This valley, almost destitute of grains, is made up of mixed heaps containing both quartz and galena. If one were to compare this illustration with a similar one obtained under free-settling conditions, the true significance of hindered settling would at once be apparent. In the case of free settling we should see a much greater number of mixed heaps, particularly in the later bulbs. The valley also would be much less apparent. In other words, hindered-settling conditions result in a very considerable increase in the ratio existing between the diameter of the average grain of quartz or light mineral and the diameter of the average grain of galena or heavy mineral. In order that hindered-settling conditions may obtain, a quicksand column must be maintained in which the mineral grains are able to move up or down freely, and at the same time the discharge below must be free. This brings up the question of designing a hindered-settling classifier so as to realize the above conditions. This

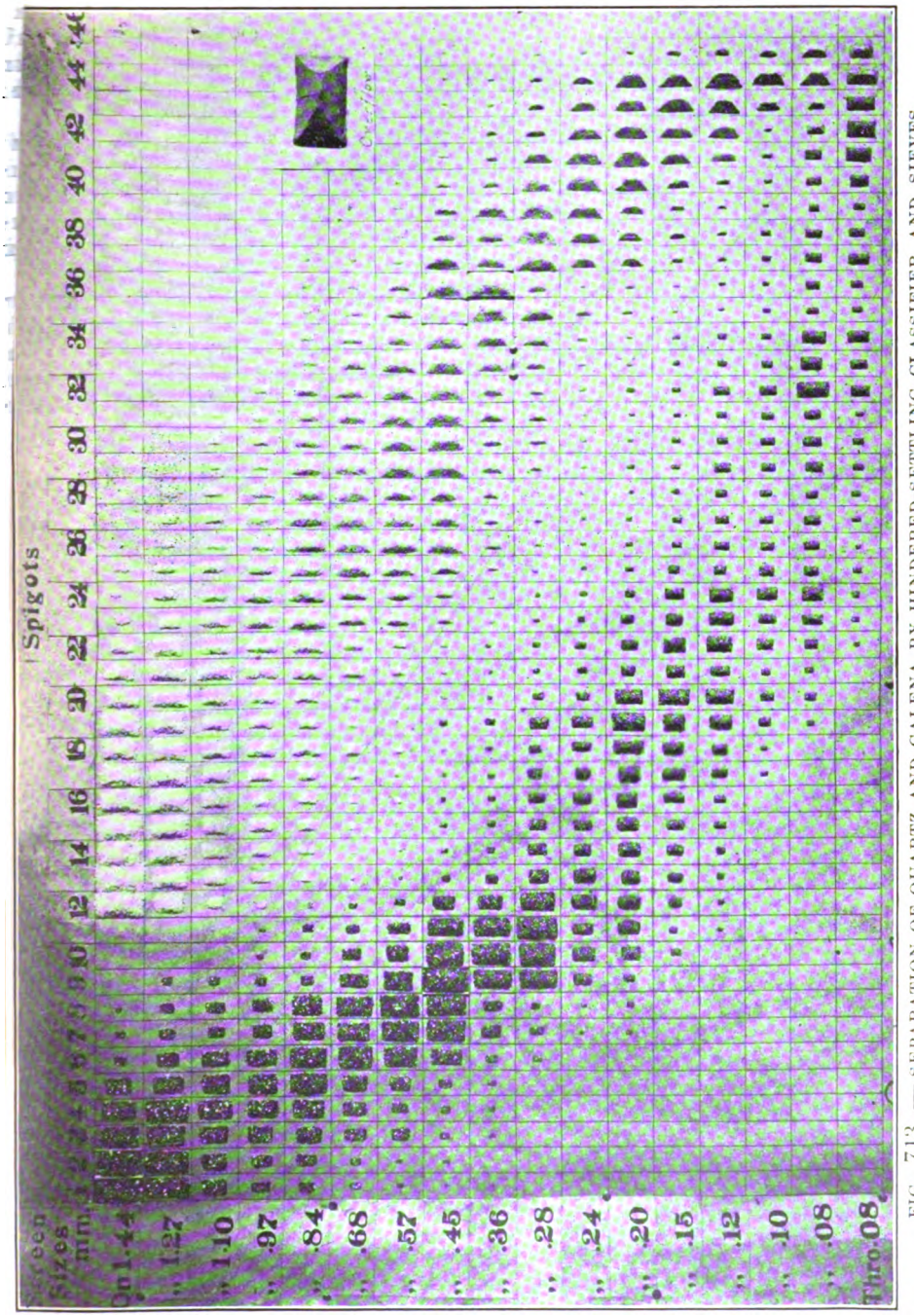

FIG. 713. — SEPARATION OF QUARTZ AND GALENA BY HINDERED-SETTLING CLASSIFIER AND SIEVES.

question will be treated later, and before discussing the matter further something needs to be said as to the velocity of rising current necessary to realize hindered-settling conditions; that is to say, the rising current necessary to keep the grains in condition of full teeter.

§ 1168. FULL-TEETER VELOCITIES OF QUARTZ AND GALENA. — The objects of the test about to be described were, first, to determine the velocity of rising current necessary to keep a definite volume of grains of known size in a state of full teeter, and second, to determine the ratio between this velocity and the free-settling velocity of grains of the same size, this latter fact being of value in designing a hindered-settling classifier, as will be shown later on.

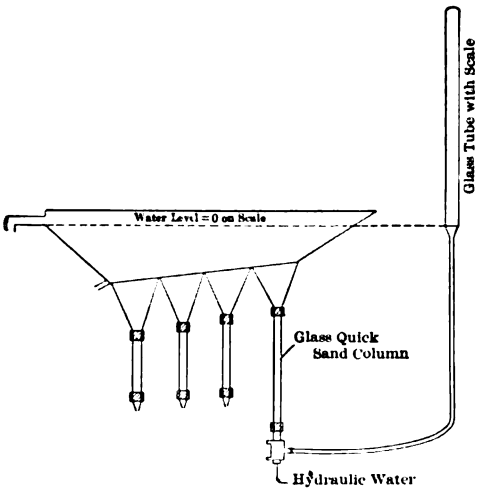

FIG. 714. — HINDERED-SETTLING CLASSIFIER AS ARRANGED FOR FULL-TEETER TEST.

The apparatus was arranged as shown in Fig. 714. A definite amount of pure quartz or pure galena which had been carefully sized and its volume accurately determined was introduced into the first sorting column of the classifier arranged as shown, and several observations were made. 1. With the material quiet in the tube, the length of the tube necessary to contain the material was measured. 2. Material just not teetering; — measuring the length of tube now filled by the material, the reading of the water column which was used to measure the pressure of the rising current and the number of seconds necessary to obtain one liter of overflow. The latter measurement was for the purpose of determining the rising current in millimeters per second. 3. Material in full teeter. Same observations as in 2. From these observations the data given in Table 497 are derived.

TABLE 497. — FULL-TEETER VELOCITIES OF QUARTZ AND GALENA.

Size on mm.	Average Size mm.	Area Tube Inside Square. mm.	Velocity mm. Sec. Full Teeter.	Velocity Free Settling.	Ratio Free to Hindered Settling.
Quartz Velocities.					
2.83	.....	.....	.....	.....	.....
2.49	2.66	430.87	72.8	181	2.48
2.06	2.28	572.56	72.8	167	2.29
1.63	1.85	"	61.5	147	2.39
1.46	1.55	"	60.3	127	2.10
1.27	1.37	"	53.3	118	2.21
1.10	1.19	"	42.6	106	2.49
0.97	1.04	"	36.4	95	2.61
0.84	0.91	"	33.0	84	2.55
0.68	0.76	"	28.1	77	2.74
0.57	0.60	"	24.6	67	2.72
0.45	0.51	"	19.86	53	2.67
0.36	0.41	"	14.41	41	2.84
0.28	0.32	"	10.19	32	3.14
0.24	0.26	615.75	7.28	30	4.12
0.20	0.22	"	6.11	26	4.25
0.15	0.175	"	5.22	19	3.64
0.119	.....	.....	.....	.....	.....

TABLE 497. — (*Continued*).

Galena Velocities.					
Size on mm.	Average Size mm.	Area Tube Inside Square mm.	Velocity mm. Sec. Full Teeter.	Velocity Free Settling.	Ratio Free to Hindered Settling.
2.83					
2.49	2.66	490.87	177.2	437	2.46
2.06	2.28	"	181.0	442	2.44
1.63	1.85	572.56	116.5	370	3.17
1.46	1.55	"	100.4	331	3.30
1.27	1.37	"	97.1	295	3.03
1.10	1.19	615.75	72.0	270	3.75
0.97	1.04	"	66.1	253	3.83
0.84	0.91	"	65.0	228	3.52
0.68	0.76	"	59.8	208	3.48
0.57	0.60	"	47.8	193	4.03
0.45	0.51	"	44.9	160	3.57
0.36	0.41	"	45.7	126	2.75
0.28	0.32	"	42.6	103	2.42
0.24	0.26	"	30.8	104	3.37
0.20	0.22	"	30.5	89	2.91
0.15	0.175	"	19.5	80	4.10
0.119	0.135	"	15.05	66	4.38

The reader should not get the idea that the velocities given in Table 497 as full-teeter velocities are something separate and distinct from free-settling velocities. They are not. These velocities are merely the velocities of the rising water currents in the sorting column at a time when there is no sand in the column. The moment hindered-settling conditions are reached and the grains are in a state of full teeter, we have a new condition of affairs to take into consideration. A large part of the area of the sorting column is now occupied by sand and the actual velocities of the water currents in the interstitial spaces are much greater than is indicated by the so-called full-teeter velocities. In fact the actual velocities may momentarily equal the free-settling velocities. These actual velocities may be computed from the formula $V = C\sqrt{D(\delta - L)}$ or determined by experiment. The whole matter comes down to this: a rising current that is totally unable to lift a single grain of given size is able to keep in condition of full teeter a considerable mass of grains of the same size and weight. The application of this work to the designing of a classifier we shall take up in another article.

§ 1169. FREE SETTLING VERSUS HINDERED SETTLING. — As has been indicated heretofore, the essential difference existing between a product classified under hindered-settling conditions and one classified under free-settling conditions is the higher ratio between the average diameters of the lighter and heavier minerals in the case of hindered settling. High ratios do not, however, mean hindered settling or even good classification. It is possible, by overfeeding a free-settling classifier, to throw large grains of light mineral that should go into the first spigot, into the later spigots and thus obtain high ratios. If such a product be screened and the various sizes spread out as in Fig. 713, no valley will be found to exist or at best only slight evidences of such a valley. A product of this sort is not well suited for further treatment. The true hindered-settling product, on the other hand, shows not only the high ratio, but if screened and laid out as in the above-mentioned cut shows very distinctly the characteristic valley. In the free-settling classifier there is a great tendency for fine particles of the light mineral to be carried down mechanically into an earlier spigot than that in which they really belong. This holds true to a considerable extent even in the most perfect classifiers and under the best conditions obtainable in the laboratory. In the case of the hindered-settling classifier, however, the fact that the grains are kept in a state of agitation in

the quicksand column, constantly colliding with neighboring grains and teetering up and down tends to break up any such couples and allow each grain to take its proper position. The smaller grains of light mineral then have an opportunity to pass over into the next pocket and so on until they reach their destination. This fact alone is capable of accounting for the higher ratios obtained in hindered settling and the better classified product.

§ 1170. APPLICATION TO CLASSIFIER DESIGN. — In designing a classifier the problem arises of how much hydraulic water per minute is required to give the desired rising current or, to look at the matter from another point of view, given that grains of certain specified sizes are wanted in the spigot product, what shall the rising current be and how much water is required? At the start, it should be stated that it is the author's practice to design the classifier for the light mineral, allowing the heavy mineral to take care of itself as it will always do. Suppose then that we have a product crushed through 2 millimeters and wish to have in the first spigot grains from 2 millimeters to 1 millimeter, taking into consideration the quartz or light mineral alone. The required rising current may be obtained from Table 638 or from the formula $V = C\sqrt{D\,(\delta - 1)}$ where V is the required velocity in millimeters per second, C is a constant equal to 87 for quartz, D equals diameter in millimeters, or 1.0 in the above case, and δ equals specific gravity of the mineral, 2.64 in the case of quartz. In the case of quartz this formula may be simplified to $V = 111.36\sqrt{D}$. This formula holds approximately true down to grains 0.2 of a millimeter in diameter; from 0.2 millimeter down the formula for quartz becomes $V = 695.36\ D^2$.

From the table the required velocity would be found to be 91.3 millimeters per second, or from the formula $V = 111.36\sqrt{D}$, V would be found to be 111.36 millimeters per second, which would not be excessive. The figures taken from Table 638 should be given the preference in all cases where they are available.

Given now from other considerations, explained in the preceding chapter, the size of the sorting column, its area is obtained in square millimeters, and the product of this area and the velocity in millimeters per second gives the cubic millimeters of hydraulic water per second. This can easily be computed to gallons per minute or cubic feet per minute as required. In case of classifiers running with open spigot, a quantity of water must be used in excess of this sufficient to make up for that discharged through the spigot.

It will be noted that the author uses as the rising current the free-settling velocity of the smallest quartz or light mineral grain which it is desirable to have in the spigot. The actual rate of settlement thus becomes 62.3 millimeters per second in the case of the 2-millimeter grain of quartz and 0 millimeters in the case of the 1-millimeter grain of quartz. Thus the average actual rate of settling considering the quartz grains alone is 31.1 millimeters per second. This plan has been used successfully for a number of years, and sizing tests of the products show that it yields practically 90% of grains coarser than the desired size.

When computing the area of the sorting column for a classifier as explained in line 9 of the Key to the computation of the four-spigot vortex classifier (§ 1122 of this volume), it has been the author's custom to divide the cubic millimeters of water and sand per minute by the desired current in millimeters per minute and thus obtain the area in square millimeters. There is a slight error involved in this method, inasmuch as the sand does not settle at the same rate at which the water is rising. If this were taken into account, the resulting area would be slightly larger or smaller than the area computed in the above-mentioned manner. It seems, however, to be near enough for all practical purposes since

we assume tonnages at the start which vary to a greater or less extent when the classifier is in operation.

When we come to the hindered-settling classifier (see § 1130), the only difference that arises is that instead of taking into consideration the area of the quicksand column, only the sorting column below is taken into consideration and is figured exactly as in the case of free settling. In designing a hindered-settling classifier the ratio existing between the area of the sorting column and the area of the quicksand chamber is of great importance. The figures given in the last column of Table 497 are of interest at this point, and up to date the author has found no better figures to use in determining this ratio. In the case of a four-spigot classifier the ratios between the area of the sorting columns and the area of the quicksand columns are accordingly made 2.5 for the coarsest spigot, 3 for the next, 3.5 for the third, and 4 for the last. Where very fine material is being treated the latter ratio may need to be increased. If the ratio between the area of the quicksand column and the sorting column is too large we have full teeter but no discharge. If the areas are properly proportioned as above we get full teeter and full discharge, which are the ideal conditions for a hindered-settling classifier. If the ratio is made too small we have full discharge and free-settling conditions in the sorting column.

§ 1171. EXTENT OF CLASSIFICATION. — It is obviously impracticable to employ in a mill a classifier with a great number of spigots. On the other hand the author does not advise using a classifier that yields less than six spigots when classifying material for treatment on the Wilfley or other concentrating tables. The extraordinary results shown in Fig. 713 are due to the fact that the material has been separated into forty-five separate groups of particles equal settling under hindered-settling conditions. If, now, we group these 45 spigots into six groups, we may get the equivalent of a six-spigot hindered-settling classifier. We will group the spigots as follows:

Spigots	1 to 11	inclusive	=	Spigot 1
"	12 to 22	"	=	" 2
"	23 to 32	"	=	" 3
"	33 to 36	"	=	" 4
"	37 to 41	"	=	" 5
"	42 to 45	"	=	" 6

If we look at Fig. 713 in the light of this we shall see that the valley, so characteristic of hindered settling, still remains. Spigot number one is composed of nearly clean galena, but the remainder of the spigots, with the exception of the sixth, show the valley and are ideal products for table work. If we compare this with Fig. 715, which represents the work done by a twelve-spigot free-settling classifier, we at once see that it is impossible to make any grouping of the 12 spigots that will give 6 spigots showing the characteristics exhibited in Fig. 713. The fact that the first spigot is not a truly classified product and that the last spigot is not altogether satisfactory, makes it desirable to use as many spigots as is practicable in order that the advantages of a properly classified feed may be realized as fully as possible.

BIBLIOGRAPHY OF LAWS OF CLASSIFYING BY SETTLING IN WATER.

1. *Am. Inst. Min. Eng. Trans.*, Vol. XXXVIII., (1907), p. 210. Robert H. Richards. Velocity of Galena and Quartz Falling in Water.
2. *Mathematical and Physical Papers.* Sir G. G. Stokes, Vol. III., (1901), p. 60. Velocity of a sphere falling through a viscous liquid.
3. *Philosophical Magazine*, September and November, 1900. H. S. Allen. Motion of a solid through a liquid.
4. *Text Book of Physics.* Ed. 1902, p. 221. Poynting and Thomson. Motion of a solid through a liquid.

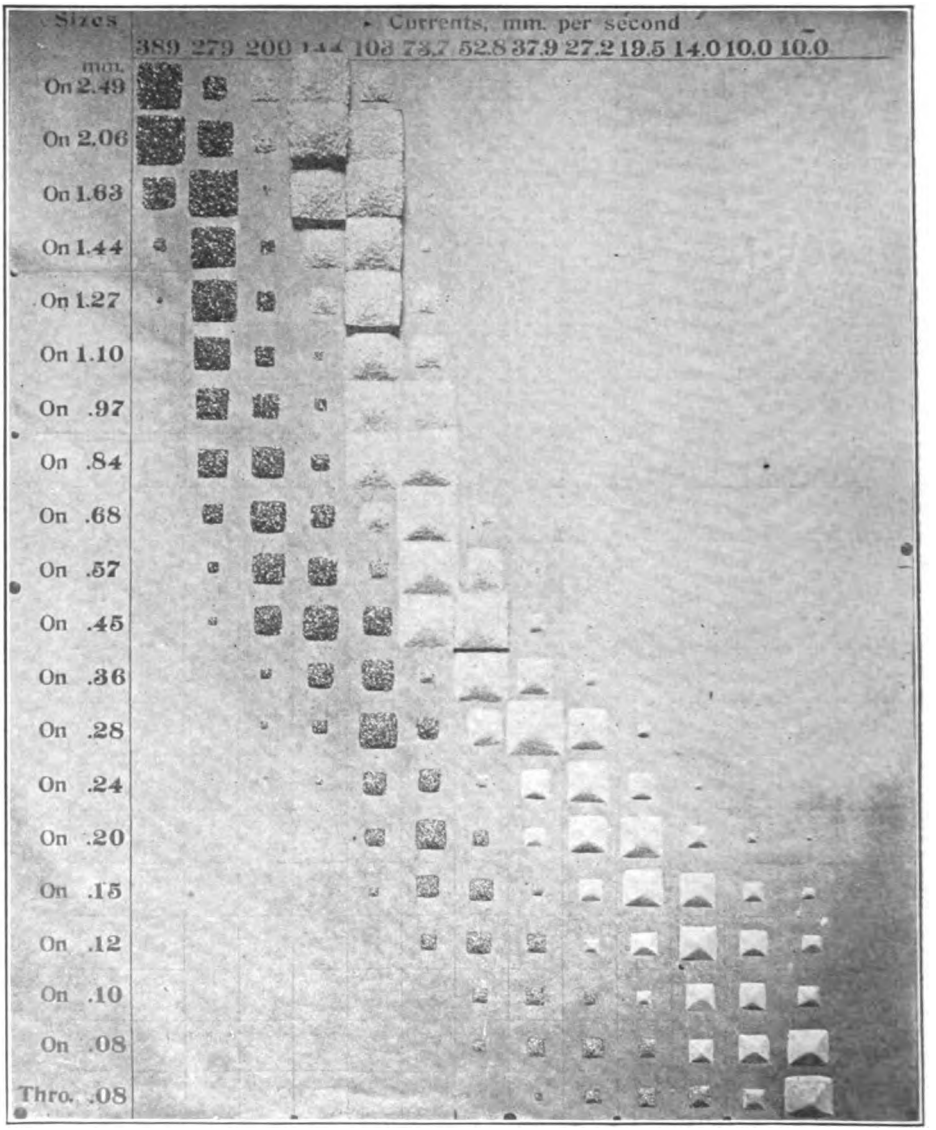

FIG. 715. — SEPARATION OF QUARTZ AND GALENA BY FREE-SETTLING CLASSIFIER AND SIEVES.

CHAPTER XXXIV.

HAND PICKING.

§ 1172. The process of separating by hand ores that have already been broken into classes is known as hand picking. In a great many of the ore-dressing problems of to-day hand picking as a necessary step takes, or should take, an important place. The tendency to slight hand picking and to regard it as an antiquated method has been remarked upon by many to whom its value as a process has been made apparent. Hand picking has already been discussed very fully in Vol. I., and this chapter is intended to deal chiefly with facts which have come to notice since the publication of Ore Dressing.

§ 1173. BREAKING. — Breaking previous to hand picking may be accomplished in two ways: first by mechanical breakers, and second by hammers.[1] In breaking by means of hammers less fines are made than when mechanical breakers are used. Hammers with 6-inch heads forged out of 1½-inch octagonal steel bars and provided with long springy handles of oak, hickory, or hornbeam have been found best for this work. These hammers weigh approximately 2.75 pounds without handles.

§ 1174. PICKING TABLES OR BELTS. — The broken ore, after having been screened for the removal of the fines and rinsed off to facilitate the picking operation, is brought upon the picking tables or belts as the case may be. Success in the picking operation depends upon how the pickers are stationed. The pickers may be stationed along a bench on which they may draw ore from pockets, or the ore may be discharged on large circular or annular tables of wood or iron which are slowly revolved while pickers stand around the periphery to do their work; better still the ore may be discharged upon a traveling picking belt, upon either side of which the pickers are stationed. When a picking belt is in use each picker throws various classes of ore into receptacles placed directly in front of him. Endless picking belts can be made of linked tablets of wood or iron, billets of wood, or ordinary rubber belting.

§ 1175. *The Allis-Chalmers Company*[1] makes an annular picking table which has found quite an extended use. The ore is brought to the table through a chute, spreads out, and is picked over, and the residue carried by the revolution of the table until it meets an inclined, stationary scraper and is swept off into a chute which delivers it to cars or to a continuous conveyor conducting it to the next operation. These tables are constructed of punched iron or steel plate. Experience has shown that it is best for pickers to throw the sorted material away from them. The annular tables are admirably adapted to this sort of thing. A conical receptacle divided by radial partitions into various compartments is placed inside the ring at the center and the various classes of ore thrown by the pickers into the compartments designed for them, from whence the material slides down into suitable compartments or receptacles beneath the machine.

§ 1176. *The Fried. Krupp Grusonwerk*[2] supplies picking tables of several patterns. The smaller picking tables (see Fig. 716), in which the work is per-

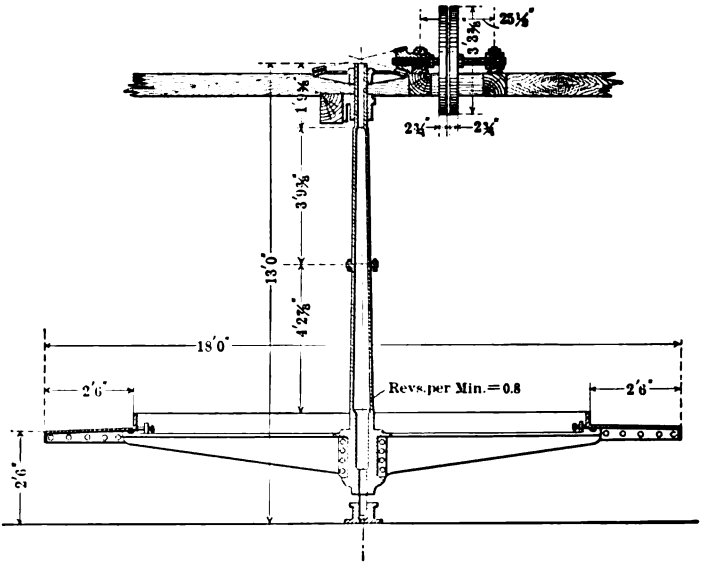

FIG. 716. — SMALL SORTING TABLE. KRUPP TYPE.

formed only on the outer periphery, consist of a cast-iron ring, made up of several segments and supported by a spider attached to a vertical shaft. The shaft is supported below in a step bearing, and above in a collar bearing, and is revolved from above by bevel gears with tight and loose pulleys.

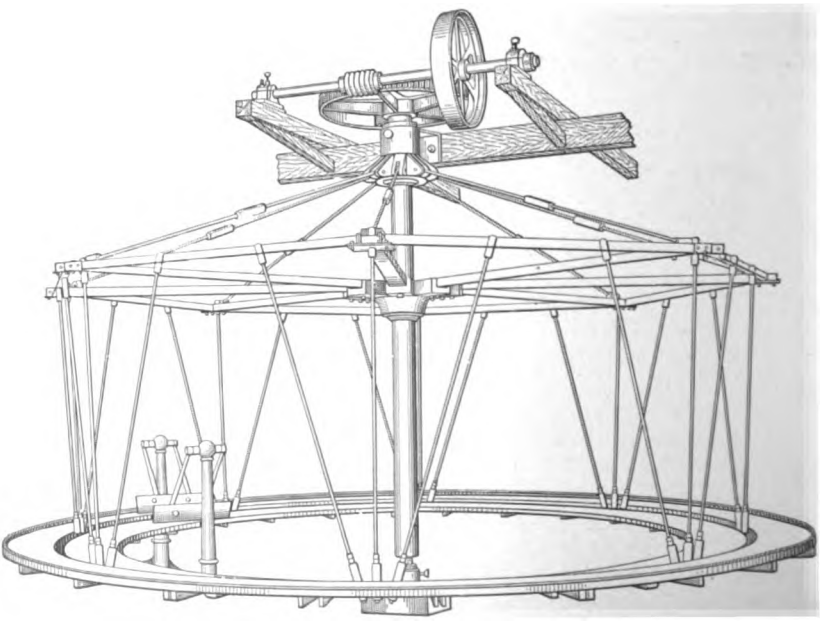

FIG. 717. — SUSPENDED SORTING TABLE. KRUPP TYPE.

If the sorting is to be done on both the outer and inner periphery, the cast-iron ring serving as the table is suspended from an iron spider by means of iron tie rods, as shown in Fig. 717. The shaft rotates — as in Fig. 716 — in a step bearing below, and a collar bearing above, and is driven from above by a worm and gear. The material remaining upon the table after a complete revolution is automatically removed by properly adjusted scrapers.

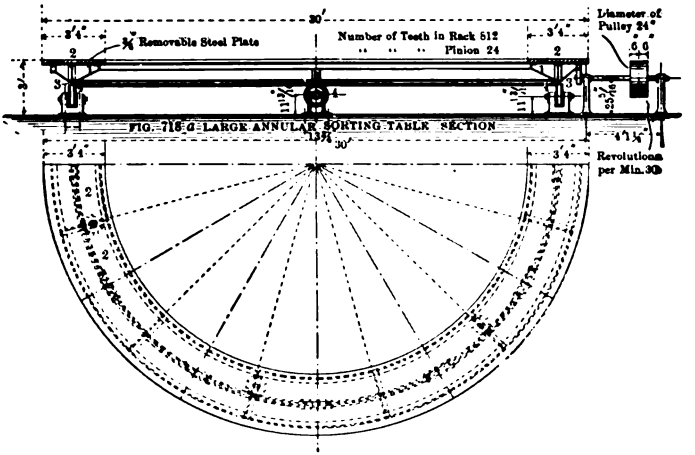
Removable Steel Plate
Number of Teeth in Rack 512
Pinion 24
Diameter of Pulley 24"
FIG. 716a. LARGE ANNULAR SORTING TABLE SECTION
Revolutions per Min. 30

FIG. 718*b*. — PLAN.

FIG. 718*a*. — LARGE ANNULAR SORTING TABLE SECTION.

Larger picking tables up to 30 feet in diameter (Figs. 718*a* and *b*), consist of an angle-iron frame (1) with replaceable steel plates (2) arranged thereon. This frame beneath is provided with an annular rail (3) running in guide rollers (4). The table is revolved by a spur gear which engages a toothed rim located beneath the table. On the larger tables, the picking is generally done both outside and inside. The scrapers are as a rule placed near the driving pulley.

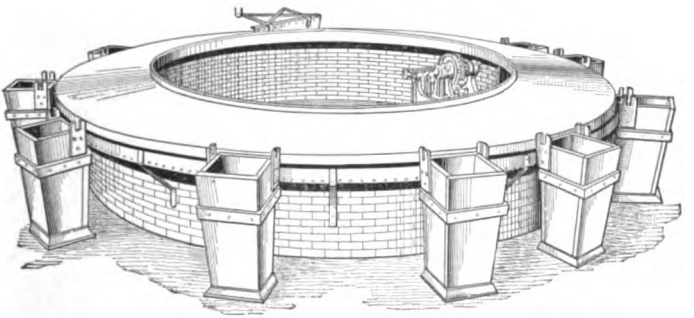

FIG. 719. — REVOLVING PICKING TABLE.

§ 1177. *The Humboldt Engineering Works Company* [3] manufactures picking tables of a number of different designs, only one of which can be described in this place. The revolving picking table shown in Fig. 719 is made in sizes up to a diameter of 16 feet 5 inches. The table top runs on ball bearings; the ball races beneath the same, and the race in the annular-shaped table top, form the guides. In this way friction is reduced to a minimum and the table is rendered exceedingly easy to drive. The gear drives the annular wheel of

the table top direct and imparts to the same a smooth uniform motion. This is of importance not alone for the work of picking itself but also for the work people. In special cases the annular picking surface can be inclined inwards as well as outwards, thus permitting of picking being done simultaneously on two kinds of ore, different in size or nature. The removal of the picked product is by a scraper, as is shown in the cut. Pickers may stand on both sides of the table to work.

§ 1178. *The Robins Conveyor Belt Company*[4] makes a special picking belt. This belt is extra heavy, 32 to 36 inches wide and is so supported upon idlers as to give a broad flat surface with narrow raised edges. It travels from 30 to 60 feet per minute and is sufficiently strong to stand spalling directly upon its surface. The material occurring in greatest quantity is allowed to remain on the belt until it reaches the delivery pulley, whence it drops either directly into the breaker or direct upon a belt conveyor. This second conveyor is frequently placed directly under the picking belt, parallel with it, and far enough back to receive the undersize from the grizzly as well as the discharge from the picking belt.

A few added details with regard to conveyor belts in general will be found under that heading in the chapter on Accessory Apparatus.

Picking belts are furnished by most of the large Engineering Companies in this country and abroad.

§ 1179. At Mill 137 in Sardinia,[1] sizes larger than 30 millimeters in diameter are picked by hand on an endless wire belt. All the valuable ore is removed, waste being allowed to fall into cars at one end. The belt is supported by two series of rollers. At the ends it passes around two drums, of which one supplies the tension as well as the motive power. The belt is 0.60 meter wide, woven of galvanized wire 3.5 millimeters in diameter, twisted in flattened spirals and joined by transverse wires. This renders it easy to lay open the belt in order to shorten it, or to change a defective part. The velocity of the belt is 12 centimeters per second or approximately 24 feet per minute. With favorable ores a speed of 20 centimeters per second or 40 feet per minute can be used. The height of the belt from the ground varies from 0.60 meter to 0.75 meter according to the stature of the pickers. For a length of 10 meters 1.25 horse-power is required. If the feed is very regular 3 tons of material may be sorted per hour. At Monteponi an average of 1,800 kilograms per hour is obtained in picking material of highly irregular size.

The same system of sorting is applied to the tailings from the jigs which treat sizes from 20 to 30 millimeters and from 14 to 20 millimeters, in order to extract from this waste material the hydrozincite and spongy zinciferous limonite which cannot be separated by gravity from the dolomite. The tailings fall on one oscillating carrier, like the Ferraris vibrating screens, but longer and not so wide, and are carried to a picking belt 8 meters long.

§ 1180. Speed and Capacity. — The ordinary speed of belts is 35 feet per minute. When picking 3-inch lump material on a 36-inch belt running 35 feet per minute with material weighing 100 pounds per cubic foot we have a capacity of 35 tons per hour. Under the same condition a 24-inch belt would have a capacity of 20 tons per hour. For a given width within reasonable limits the capacity is proportional to the speed and to the average size of the lumps carried, *e.g.*, the above conveyor running 42 feet per minute instead of 35 has a capacity of 41 tons per hour. For close work the speed should be reduced.[4]

§ 1181. Costs.[4] — A few figures from practice show that hand picking is an inexpensive process even when compared with the cost of milling per ton of crude ore, and astonishingly inexpensive when compared with milling cost

per ton of concentrate produced. Hand picking is often made use of on the Rand for removing waste from fairly low-grade gold ores where milling costs are only $1.10 per ton. From 10 to 30% of ore is picked out with native labor at 50 cents per day at a cost of 14 cents per ton picked out. Obviously a considerable saving would result even with labor at $3.00 to $3.50 per day. The waste picked out in this way in some plants assays less in gold than the tailings from the cyanide plant. Hand sorting is extensively practised in European zinc mines, including some with galena-blende-siderite mixture, and at Leadville, Colorado, where a large part of the lead is prepared for market in this manner. In picking ore at the Moyer mine at Leadville, one man is able to produce in a 9-hour shift 10 tons assaying 31% zinc, making the cost of the latter 30 cents per ton. At the Square Deal Mine in Wisconsin, the ore is passed over a ⅝-inch grizzly and delivered to a picking belt where one boy, paid $1.50 a day, picks out 20 tons of waste rock per shift, making the cost 7.5 cents per ton, whereas if this waste was run through the mill the milling cost would be 30 cents per ton. One can safely reckon that, with proper facilities and ore crushed to 1½-inch size, with wages 37½ cents per hour, on ore yielding 6% lead and 12% zinc, hand picking can be carried out for two minerals at an average cost of 66 cents per ton of mineral produced.

§ 1182. COBBING DEVICES. — Wood, hammer heads, pick points, etc., are often picked out by hand. Machines known as magnetic cobbers are also utilized to prevent stray iron from getting into the breakers. This class of machine will be discussed under Chapter XXXIX. Under Chapter XL., also, will be found a very interesting device for the removal of wood from mine ore before it goes to the breakers.

BIBLIOGRAPHY FOR HAND PICKING.

1. Ferraris, Erminio, Monteponi, Sardinia. Private communication containing references to ore-dressing practice at the Monteponi Mill.
2. Fried. Krupp Grusonwerk, Magdeburg-Buckau, Germany. Catalogues containing description of picking tables, etc.
3. Humboldt Engineering Works Company, Kalk, near Cologne, Germany. Catalogue containing description of picking tables, etc.
4. Report of the Commission Appointed to Investigate the Zinc Resources of British Columbia and the Conditions Affecting their Exploitation. Bulletin Canadian Department of the Interior Mines Branch, pp. 76 to 80. Walter Renton Ingalls discusses the hand-picking question.

CHAPTER XXXV.

JIGS.

§ 1183. The chief advances in the art of jigging have been along the lines of increasing the capacity and decreasing the water consumption. The Hancock jig, described briefly upon pages 504 and 505, Vol. I., has found favor in a number of our large American mills. The Collom jig, formerly extensively used in the Lake Superior region, has given place to the Hodge jig in all of the mills except the Calumet and Hecla, in which latter the Woodbury system is giving excellent satisfaction. For treating materials under 2 millimeters, tables of the Wilfley type have to a large extent supplanted jigs. This has been due to the fact that products 2 millimeters in size and under can be treated in general much more efficiently by means of tables than by jigs. Less water and less power are required and a greater capacity is obtainable.

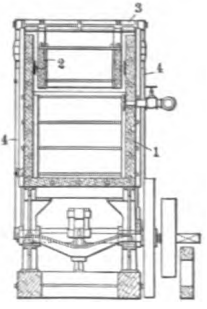

FIG. 720*c*. — CROSS-SECTION.

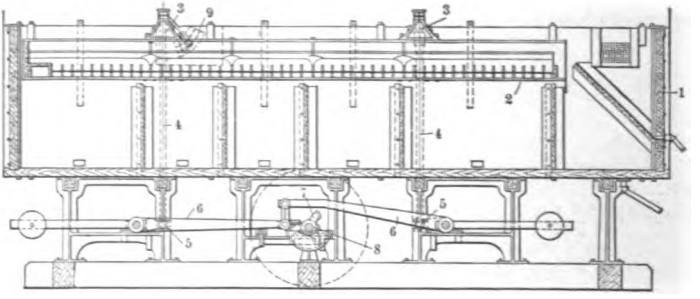

FIG. 720*a*. — OUTLINE OF THE HANCOCK JIG.

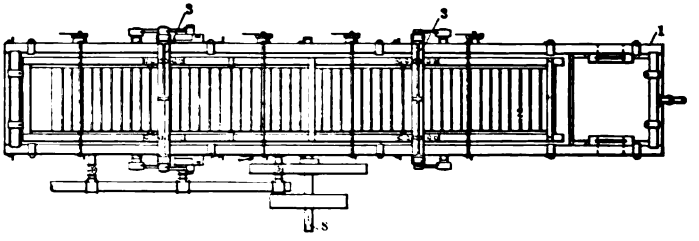

FIG. 720*b*. — PLAN.

MOVABLE-SIEVE JIGS.

§ 1184. THE HANCOCK JIG. — The Hancock jig is of Australian origin and was invented by H. R. Hancock. It was designed to treat low-grade sulphides such as chalcopyrite, bornite, sphalerite, etc., and proved to be a great success. It is manufactured in the United States by Allis-Chalmers Company.[1] A cut of this machine is shown in Figs. 720*a*, *b*, and *c*.

The jig consists of a box (1) 25 feet long, 4 feet 2 inches wide, and 5 feet 9 inches high, which forms the hutch. In the hutch box, and submerged in the water, works the screen frame (2), or sieve, of the jig. This sieve is 20 feet long and 2 feet 8 inches wide and is divided into a series of pockets extending across the screen. These pockets maintain and hold a bed, through which the concentrates are drawn into the hutch. This screen, or sieve, is carried on two cast-steel cross-bars (3) securely fastened to the screen. The cross-bars are supported by four upright arms (4), two on each side. These arms or rods are connected at the bottom to rocking-arm shafts (5), the rocking-arm shafts being connected to levers (6), the ends of which engage a three-way cam (7) on the main drive shaft (8) of the jig. This main drive shaft revolves at 60 to 65 revolutions per minute, and the result of this motion is a reciprocatory movement imparted to the sieve, which can be described as an upward and forward movement and downward and backward movement. The upward and forward movement is produced by the rocking arms, the downward movement of the sieve is produced by gravity, and the "bump" or backward movement is produced by the radial bar (9), which is connected to the end of one cross-arm, as shown in the illustration. The up and down motion is about ⅜ inch, the backward motion, or the "bump," is only sufficient to advance the feed properly along the screen. Both the amount of the up and down motion and the "bump" are controlled by proper adjustment, so that this movement can be regulated to suit different kinds of ores. The number of reciprocations of the screen is 180 to 195 per minute.

Alexander Veitch states [1] concerning his experience with a Hancock jig:

"*Capacity:* The machine is treating about 350 tons of crude ore per 24 hours.

"*Amount of Sizing Necessary:* The Hancock jig is dealing with the whole of the material formerly treated by eight Harz jigs (four sizes), except that material over ⅜-inch size which is removed and dealt with by one of the old jigs.

"*Quality of Work:* Notwithstanding the great range of sizes dealt with by the single machine, the concentrates average as rich as with the Harz jigs, while the tailings average distinctly poorer.

"*Power Required:* While this has not been determined exactly, it is believed to be decidedly lower per ton of ore than with the Harz jigs.

"*Quantity of Water Required per Ton of Ore:* This is found to be about one-fourth of that necessary for the Harz jigs.

"*Wear and Tear of Screens:* This appears, as far as can be judged, less by about 60% than with the Harz jigs.

"*The Simplification of the mill,* which will result from the great reduction in the number of jigs, trommels, and launders, is so apparent as scarcely to need comment."

At Britannia Beach, British Columbia,[9] the Hancock jig is treating 500 tons of ore per 24 hours, and gives results as shown in Table 498.

TABLE 498. — RESULTS OBTAINED WITH HANCOCK JIG AT BRITANNIA BEACH, BRITISH COLUMBIA.

	Feed.	Concentrates	Tailings.
Tons per 24 hours	500	90	410
Size of material	⅜ inch to 0	.....	.....
Ounces gold per ton	0.049	0.10	0.036
Percent copper	1.41	3.30	0.96

The jig makes 180 strokes per minute, requires 4 horse-power and approximately 400,000 gallons of water per 24 hours. The jig could have handled a greater tonnage. The first three hutch products were sent to the smelter, the fourth was returned to the jig part of the time and was sent to the smelter the rest of the time. The fifth and sixth were re-ground, while the seventh hutch product was shipped as fine slime concentrates and ran 2 to 3% copper.

Very careful and thorough tests covering a period of ten days have been made of the Hancock jig treating Montana sulphide copper ores.[8] These tests were made for the purpose of determining the efficiency of the jig in handling coarse material, the maximum tonnage that the jig can treat in 24 hours, and the durability of the wearing parts. The jigs were fed with a mixture of material through 8 millimeters on 2½ millimeters and through $\frac{9}{16}$-inch on 5 millimeters. The results of this test are shown in Table 499.

TABLE 499. — HANCOCK JIG TEST ON MONTANA SULPHIDE COPPER ORE.

Product.	Rate per 24 Hours.		Assay Percent.		Percent Total Copper in Feed.
	Gallons.	Pounds. Solid.	Copper.	Insoluble.	
Feed.	268,010	1,293,830	2.91	76.4	100.0
Concentrates plugs 1, 2, and 3	234,500	161,500	11.44	27.5	49.06
Middlings 5 and 6	540,600	1,134,400	1.77	83.9	53.22
Total	775,100	1,295,900			102.28
Material Produced by Jig and Re-treated.					
Middlings plug 4 returned to jig for re-treatment	29,511	155,300	5.24	61.9	21.62

The $\frac{9}{16}$-inch material sent to the Hancock jig was exceptionally poor in free mineral, and as a result of this, while the concentrates produced from plugs 1 and 2 were exceptionally high grade, that from plug 3 was of much poorer grade. This explains the high percent insoluble in the concentrates. The quality of plug 3 could be improved by carrying a higher bed over the third compartment. The average recovery of 49.06% is good work. The middlings assay of 1.77% copper is exceptionally good when compared with the Evans jig middlings produced daily in the plant where the test was made.

Maximum Tons Per 24 Hours. The average tonnage per 24 hours was 646.9. This could not be exceeded for the reason that the rolls and elevator following the jig were unable to handle, on $\frac{9}{16}$-inch stuff, more than 650 tons. The highest tonnages satisfactorily attained by the jig, namely 794 and 880, could not be maintained any considerable length of time. The recovery in the concentrates of 45.52% of the copper, together with a middling product assaying 1.7% copper which was obtained with a tonnage of 794, would indicate that the jig has a capacity of more than 650 tons per 24 hours if operated under sufficiently favorable conditions. The w ter required per 24 hours was 507,100 gallons or 783.8 gallons of fresh water per ton of ore fed. This is less than ¼ the water required for the Evans jig. Treating material through 8-millimeter round hole on 2½ millimeter, 443.7 tons were treated per 24 hours, using 1327.5 gallons of fresh water per ton of ore and making concentrates assaying 12.15 % copper and middlings assaying 1.73%.

A sizing test of the feed to the jig and of the middlings from the jig showing the distribution of the values may prove to be of interest. These are given in Tables 500 and 501.

TABLE 500. — SCREEN SIZING TEST OF FEED TO HANCOCK JIG.

Sizes. Millimeters or Mesh.	Percent of Total Weight.	Percent Copper.	Percent Total Copper.
On 8.00 mm.	1.62	1.50	0.84
Through 8.00 mm. On 6.78 "	13.45	2.35	10.89
" 6.78 " " 5.66 "	12.70	2.80	12.27
" 5.66 " " 4.76 "	16.76	2.65	15.31
" 4.76 " " 4.00 "	14.12	2.90	14.12
" 4.00 " " 3.36 "	8.51	3.00	8.81
" 3.36 " " 2.83 "	10.54	3.30	12.00
" 2.83 " " 2.38 "	6.76	3.15	7.34
" 2.38 " " 2.00 "	3.18	3.59	3.83
" 2.00 " " 1.68 "	5.74	3.40	6.73
" 1.68 " " 1.41 "	2.06	3.35	2.38
" 1.41 " " 1.19 "	1.22	3.45	1.44
" 1.19 " " 1.00 "	0.33	3.60	0.42
" 1.00 " " 0.841 "	0.74	3.85	0.99
" 0.841 " " 0.707 "			
" 0.707 " " 0.595 "	0.41	3.85	0.54
" 0.595 " " 0.500 "	0.17	3.85	0.22
" 0.500 " " 60 mesh	0.24	4.30	0.35
" 60 mesh " 80 "	0.20	4.45	0.31
" 80 " " 100 "	0.20	4.60	0.16
" 100 " " 120 "	0.03	4.50	0.06
" 120 " " 150 "	0.14	4.65	0.22
" 150 " " 200 "	0.03	5.60	0.07
" 200 "	0.64	5.70	1.42
Loss	0.31		
Total	100.00		100.72

TABLE 501. — SCREEN SIZING TEST OF HANCOCK JIG MIDDLINGS.

Sizes. Millimeters or Mesh.	Percent of Total Weight.	Percent Copper.	Percent Total Copper.
On 8.00 mm.	1.68	2.25	2.13
Through 8.00 mm. On 6.78 "	11.45	1.45	9.38
" 6.78 " " 5.66 "	12.30	1.55	10.03
" 5.66 " " 4.76 "	17.95	1.75	17.75
" 4.76 " " 4.00 "	13.84	1.70	13.29
" 4.00 " " 3.36 "	7.79	1.75	7.70
" 3.36 " " 2.83 "	10.55	1.60	9.53
" 2.83 " " 2.38 "	7.24	1.90	7.78
" 2.38 " " 2.00 "	2.71	1.80	2.75
" 2.00 " " 1.68 "	6.11	1.75	6.05
" 1.68 " " 1.41 "	2.37	1.85	2.48
" 1.41 " " 1.19 "	2.09	1.75	2.06
" 1.19 " " 1.00 "	0.14	1.80	0.14
" 1.00 " " 0.841 "	0.67	1.60	0.60
" 0.841 " " 0.707 "	0.07	1.75	0.06
" 0.707 " " 0.595 "	0.51	1.65	0.47
" 0.595 " " 0.500 "	0.21	1.75	0.21
" 0.500 " " 60 mesh	0.25	2.15	0.32
" 60 mesh " 80 "	0.28	2.35	0.36
" 80 " " 100 "	0.11	2.50	0.17
" 100 " " 120 "	0.07	2.80	0.10
" 120 " " 150 "	0.05	4.20	0.10
" 150 " " 200 "	0.16	4.00	0.38
" 200 "	0.46	5.80	1.52
Loss	0.94		
Total	100.00		95.34

The wearing parts all stood up well under the tonnages treated. At the end of the test, which lasted ten days actual running time, the movable tip on the rocking lever was worn about half-way through. The wearing pieces on the cam were, however, in excellent condition. The worst defect noted was the wearing away of the wooden partitions forming the pockets on the screen frame.

Fixed-Sieve Jigs.

§ 1185. The New Century Jig.[2] — (See Fig. 721.) The essentially important features of this jig are: 1, a differential motion imparted to the plunger giving it a quick down stroke, an instant at rest, and a slow return; and 2, a flap-valve plunger which fits tight on its down stroke and loosely on the return stroke. The plunger (1) instead of fitting its compartment has a one-inch water way on all of its four sides. Along its edges, which are beveled, rubber belting (2) is secured, which acts as flap valves and which fits tightly when the plunger makes its down stroke. At each corner of the plunger is an adjustable guide (3) which works in an angle iron in the corner of the compartment. Motion is imparted to the plunger by means of a cam (4) which works on a

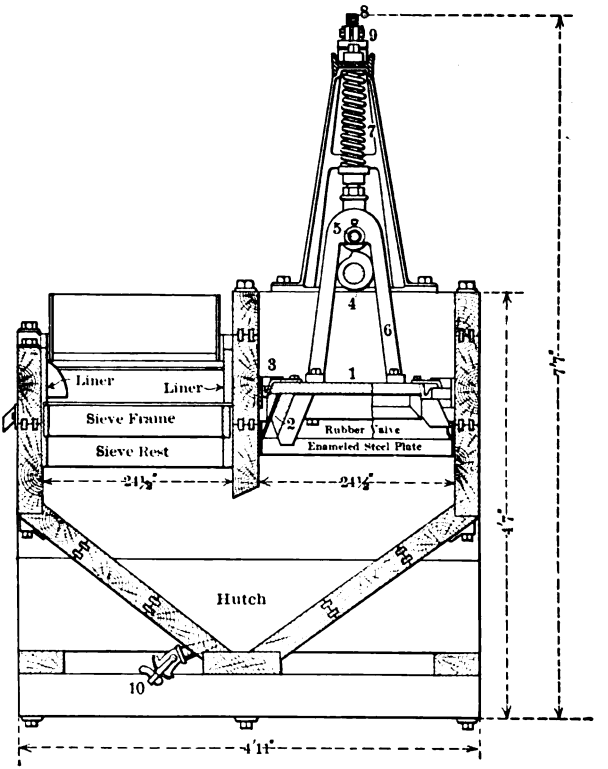

FIG. 721. — NEW CENTURY JIG.

roller (5) carried in the elbow of a yoke (6) which is bolted to the plunger. A coiled spring (7) of adjustable pressure bearing on top of the yoke serves to force the plunger down when the cam runs off the roller. At the end of this quick downward stroke the plunger is stopped by the nut (8) at the top end of the guide rod upon which the spring is coiled, coming in contact with a rubber buffer (9) on top of the upper frame. The motion of the plunger is not stopped by the cam. As the cam revolves again it lifts the plunger slowly until the highest point is reached, when this cycle is repeated. The cam makes 150 revolutions per minute.

The hutch product of this machine is removed in the usual manner by a tap (10) at the lowest point. A multiple valve is utilized to draw middlings

from the last of several compartments for sizes of grains under ¼ inch. This is shown in Figs. 722*a*, *b*, and *c*.

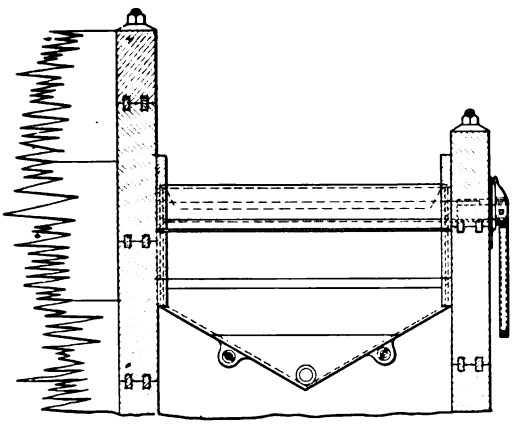

FIG. 722*a*. — NEW CENTURY MIDDLINGS DISCHARGE.

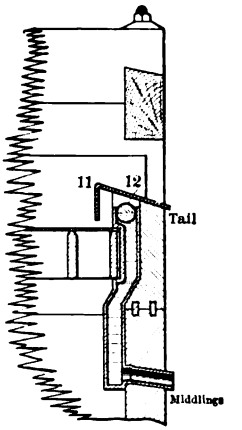

FIG. 722*b*. — SECTION THROUGH CENTERS.

Referring to the cross-section, it will be seen that a shield (11) which extends downward into the middlings serves to make a passageway upward and outward for that product. Its passage outward is regulated by the valve (12) which in the cross-section shows as a circle, and which is there represented closed. The valve consists of a plug with six or more notches in it, which can be rotated about its axis by a handle. If the valve as shown in the cross-section were rotated 90° this would afford a passage outward for the middlings. For sizes of grain larger than ¼ inch, the middlings are discharged from the last compartment by the jig discharge shown in Figs. 723*a*, *b*, and *c*. Two shields (13)

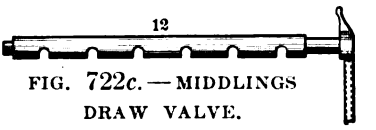

FIG. 722*c*. — MIDDLINGS DRAW VALVE.

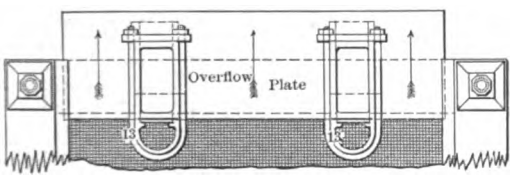

FIG. 723*a*. — NEW CENTURY DOUBLE END DRAW FOR COARSE MIDDLINGS. PLAN.

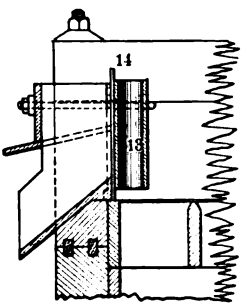

FIG. 723*b*. — SECTION ON "A–B."

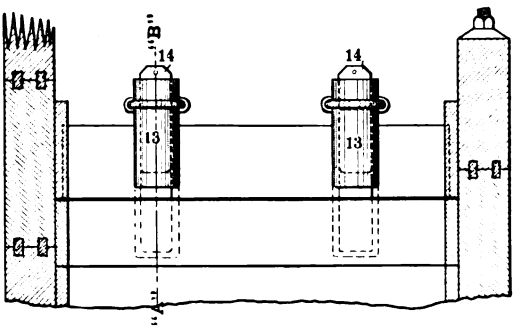

FIG. 723*c*. — END VIEW FROM INTERIOR OF TANK.

dip into the middlings and make a passageway outward. A gate (14), which in the cross-section is represented closed, regulates this operation.

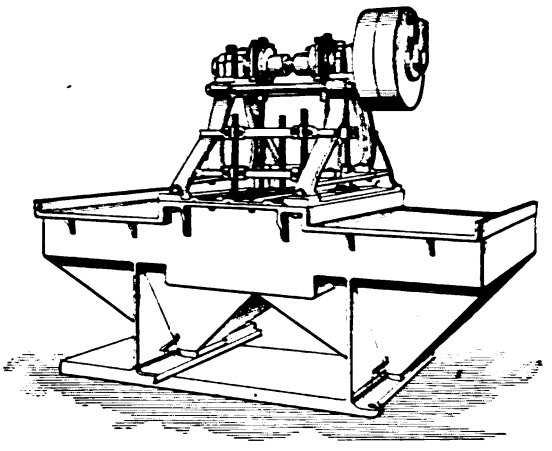

FIG. 724. — HODGE JIG.

This jig has given satisfaction [12] in the treatment of zinc ores in Austinville, Virginia, where it is thought that the differential motion of the jig is of less importance, however, than the form of the plunger, which is highly recommended as doing good work and keeping the screen bed clean.

§ 1186. HODGE JIG. — The Hodge jig has replaced the Collom jig in all the Lake Superior mills except the Calumet and Hecla. It is manufactured by the Portage Lake Foundry, Hancock, Michigan. A cut of this jig is shown in Fig. 724. This jig has a differential motion, a description of which will be found in § 1196.

§ 1187. THE FRIED. KRUPP GRUSONWERK [7] makes a jig of the Harz type. (See Fig. 725.) The hutches are of wood, forged iron or cast iron.

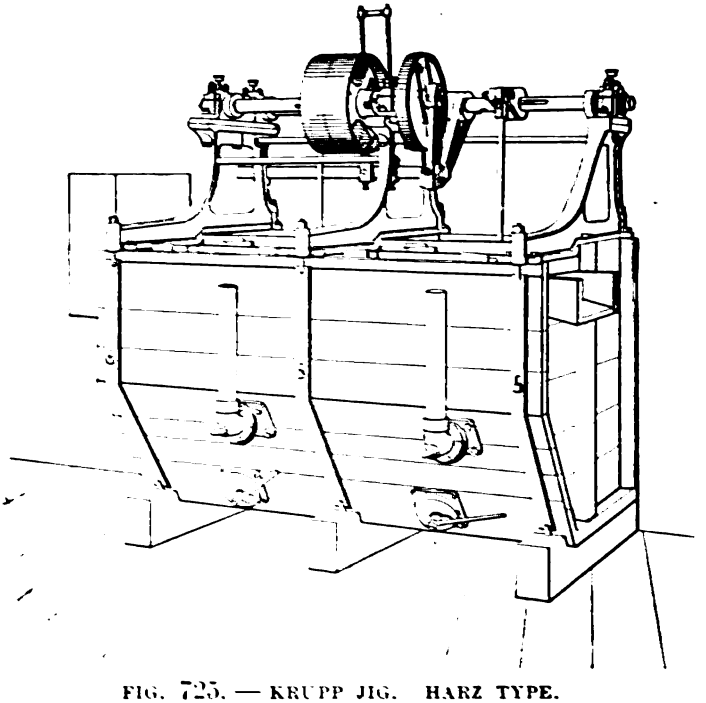

FIG. 725. — KRUPP JIG. HARZ TYPE.

Self-tightening rotary valves are employed for discharging the hutch products.

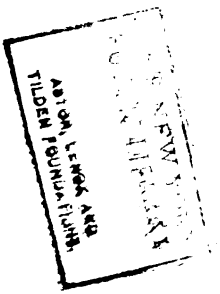
ASTOR, LENOX AND
TILDEN FOUNDATIONS

THE NEW YORK
PUBLIC LIBRARY

lves consist of two plates provided with pentagonal openings, one rotat-
the other, thus regulating the amount of discharge. The pentagonal
of opening is adopted because even in the case of a small sectional area
ing, comparatively large grains may pass through, whereas in the case of
opening, an elliptical sectional area would form, allowing the passage of
nall grains but much water. For a continuous discharge the rotating
s placed on the inside of the valve and the outer plate carries a gooseneck.
e side discharge is so arranged that a movable gate and an adjustable
re provided for the concentrates.

e center discharge is practically the same as that described in Ore
ng, Vol. I., § 376, but the closure of the discharge pipe is worthy of
At the end of the pipe there is a chute which is capable of being rotated,
egulating the quantity of material and water discharged. The discharge
s rotatably connected to a rising pipe outside the hutch. The discharged
ial and especially the quantity of the outflowing water are regulated by
esponding adjustment of this pipe.

sides the common eccentric motion these machines can be equipped with a
-lever movement. This arrangement gives a downward motion which is very
on the start and gradually diminishing, while the up stroke is the reverse.

1188. CLASSIFIER JIGS.—Jigs intended to affect a preliminary separation of
imes from the coarser particles of ore have been introduced in a number of
These devices are known as "slime classifiers" or classifier jigs. They are
rictly speaking classifiers, but jigs with a slime-separating device added. In
me sense a Wilfley table might be spoken of as a slime classifier for the reason
it separates slime from sand. The machine of this type which has thus far
the most extended application in the mills is the Woodbury slime classifier.
the slime classifier differs only in minor details from the Woodbury jig, it has
thought best to take up the entire Woodbury system under a single heading.

1189. THE WOODBURY JIG.—The Woodbury all-iron slime classifier and jigs
nanufactured by the National Ore Concentration Company [10] and comprise in
nary mill phrase a three-compartment jig, the compartments of which Wood-
y names as follows: a jig classifier, a clean-up jig, and a middlings jig.

The Woodbury Slime Classifier, as has already been said, is primarily a jig
a plunger compartment at the head end. A device for separating slimes
n the sands is fastened to the tail of the jig. The feed comes on to the classi-
over the plunger compartment unclassified, with slimes included, and is
bjected to a jigging action, causing stratification, heavy mineral to the bot-
n, then middlings, sands, and slimes. The pressure of hutch water upwards
ough the screen holds the light particles or slime in suspension. A large
ass shield (1) (Figs. 726*a* and *b*) extends down into the bed of sand, which
ds it against the entrance of slime, the slime being warded off and pass-
g around the shield over the tail of the jig and away for further treatment.
ie sands pass under the slime shield and discharge through a gate (2) at a
wer level than the slimes. This gate is regulated to suit quantity and size
material discharged. This discharge ordinarily is a middlings product
hich goes to subsequent jigs for further treatment. Fine material is jigged
rough the screen into the hutch and discharges through plugs. A brass
ncentrate cup (3) inside the slime shield extends down and into the bed of
ineral, which seals it against the entrance of sands, the mineral passing under
ie shield and out through a discharge away from the machine. The hutch
built entirely of cast iron except where there are acid waters, when a wooden
utch is provided. A quick and slow-motion device, consisting of a variable
rank connection between driving pulley and eccentric shaft, gives to the plunger
quick downward and slow upward motion. Eccentrics are of the double

design with eccentricity of 0 to 3 inches and are arranged for ready adjustment.

The advantages of the Woodbury slime classifier or first compartment of the Woodbury system are as follows: The uniting of classifying and jigging operations into one and the consequent saving of floor space; diminishing the dilution of slimes as a help to slime treatment; the saving of water and power; the doing away of settling-tank systems; the increased capacity, this jig having six times the capacity of the old Collom and Evans jigs.

Clean-up Jig. In the Woodbury system of concentration [3] the pulp from the first jig, or classifier, passes into the clean-up jig flowing over the plunger compartment. (See Fig. 726). The clean-up jig has a differential motion imparted to the plunger, whereby the plunger makes a quick downward stroke and returns slowly. The clean-up jig discharges concentrates from the sieve by means of ovoid brass shields *C*, which are located near the tail end of the jig, and placed where they draw on the bed of concentrates equally from both sides. The shields extend into the bed of concentrates which seals them against the entrance of low-grade material. The concentrates are discharged from the center of these shields by adjustable brass discharges through the pipe *P* out of the machine. The adjustment is made by varying the height of the end of the discharge pipe, which controls also the depth of concentrates on the screen, and consequently regulates the quality of the discharged product which goes through the bed of concentrates and the sieve and is drawn off below. The middlings are drawn off through the hydraulic middlings discharge. An angle from shield *S* is fastened across the tail end of the jig, extending down into the middlings product which seals it against the entrance of tailings. The pipe *A* permits the sand under the shield to take on the jigging motion. From under this shield, a number of openings, placed at intervals of six or seven inches, lead into the closed compartment *M*.

The middlings discharge from under the shield through openings into the closed compartment and discharge through plugs in the bottom. A fresh-water supply pipe *W* in this compartment regulates the quality of middlings which can pass under the shield and so be able to get into the re-grinding plant. The tailings pass over the tail of the jig into the compartment *G*. The ore enters the next jig through openings *O* at the bottom of this compartment, and the excess of water which comes to this compartment from the clean-up jig flows over the top into the trough marked *water lesseners* and is directed into the hutch of the next jig.

Middlings Jig. In this next jig, called the middlings jig, the same products are made in the same way as in the clean-up jig, except that the tailings are discarded. This jig is like the clean-up jig except that it has a simple eccentric without differential motion. The dimensions of the parts are given in the drawing.

In this system of concentration, hydraulic classifiers are eliminated, while the slimes are nevertheless separated, and sent to the slime tables with little dilution. Also a true middlings product of included grains is made by the hydraulic middlings discharge on each jig. The feed to the jig classifier is under $\frac{3}{8}$ inch to and including slimes. Under certain circumstances more than two jigs follow the jig classifier. If the tailings values of the middlings jig warrant it, the tailings are run upon another similar jig and re-treated in the same manner.

At Mill 177 [3] two sets of these jigs, of five sieves each, handle all the tonnage from one stamp on the conglomerate; and three such series are used on the amygdaloid. The conglomerate stamping rate averages 325 tons per 24 hours, all of which goes to the jig classifiers where about 45% is separated as slimes. The first two of the five compartments yield copper, and the succeeding three, discharge middlings for re-crushing in the Chili mill. On the amygdaloid the stamping rate is 600 tons, all of which goes to the jig classifiers

where some 40% is separated out as slime. This gives a maximum capacity of the 24 by 36-inch jig as 120 tons per 24 hours. On coarser material, where the tailings of the jig are to be re-crushed, these capacities can be greatly exceeded.

For coarse jigging the Woodbury "Bull Jig" has been introduced to cover the field of and replace the "Bull Harz Jig." It is built of wood or iron on the Woodbury principle and has large capacity. It can be used on unsized material from ⅜ inch up. It can be equipped with a classifying device for separating wood chips or pulp.

At Mill 162[8] a test has been made treating the crushed product from Huntington mills by the Woodbury system. The character of the material fed is shown in Table 502.

TABLE 502. — SCREEN SIZING TEST ON FEED TO WOODBURY SLIME CLASSIFIER. MILL 162.

Size.	Percent of Size.	Assay. Percent Copper.	Percent of Total Copper.
On 2.00 mm.	0.2	1.35	0.14
Through 2.00 mm. " 1.68 "	3.1	0.65	1.43
" 1.68 " " 1.41 "	6.3	0.65	2.93
" 1.41 " " 1.19 "	8.9	0.65	4.14
" 1.19 " " 1.0 "	3.7	0.65	1.71
" 1.0 " " 0.841 "	14.8	0.75	7.93
" 0.841 " " 0.707 "	10.1	0.90	6.50
" 0.707 " " 0.595 "	4.8	1.10	3.79
" 0.595 " " 0.500 "	8.3	1.20	7.14
" 0.500 " " 60 mesh	13.9	1.70	16.86
" 60 mesh " 80 "	10.4	2.20	16.36
" 80 " " 100 "	4.7	2.75	9.21
" 100 " " 120 "	0.6	2.90	1.21
" 120 " " 150 "	2.9	3.50	7.28
" 150 " " 200 "	0.8	3.75	2.14
" 200 "	6.1	3.60	15.71
Loss	0.4		
Total	100.00		104.48

The classifier jig yielded slimes, 87% of which was finer than 100 mesh, middlings to be re-ground and fed to the clean-up jig. The clean-up jig made hydraulic middlings running 1% copper, and hutch middlings running 2.7% copper. The tailings obtained in this test ran 0.84% copper distributed as shown in Table 503.

TABLE 503. — SCREEN SIZING TEST OF WOODBURY JIG TAILINGS. MILL 162.

Size.	Percent.	Percent Copper.	Percent of Total Copper.
On 2.00 mm.	0.2	0.60	0.12
Through 2.00 mm. " 1.68 "	3.3	0.45	1.79
" 1.68 " " 1.41 "	6.9	0.40	3.33
" 1.41 " " 1.19 "	10.0	0.40	4.75
" 1.19 " " 1.00 "	4.7	0.40	2.26
" 1.00 " " 0.841 "	16.9	0.40	8.10
" 0.841 " " 0.707 "	11.0	0.50	6.55
" 0.707 " " 0.595 "	4.8	0.55	3.09
" 0.595 " " 0.500 "	9.3	0.60	6.66
" 0.500 " " 60 mesh	15.1	0.87	15.60
" 60 mesh " 80 "	9.6	1.30	14.89
" 80 " " 100 "	4.7	2.05	11.55
" 100 " " 120 "	1.1	3.40	4.40
" 120 " " 150 "	1.2	5.40	7.76
" 150 " " 200 "	0.2	7.95	1.90
" 200 "	0.6	10.20	7.25
Loss	0.4		
	100.0		100.02

TABLE 504. — WOODBURY CLASSIFIERS AND JIGS. MILL 162.

	Screens.				Stroke Inches.	Speed Revolutions per Minute.
	Length Inches.	Width Inches.	Area Square Inches.	Mesh.		
Classifier No. 1 using slime shield	36	22	792	4	1½	195
" " 2 " " " but operating as a jig	36	22	792	4	1¾	195
Jig No. 1	24[1]	48	1152	6	1¼	205
" " 2	24[1]	48	1152	10	⅞	205
" " 3	24	48	1152	12	⅝	205

[1] Size of screen is 30 inches by 48 inches, but in order to obtain better ratio between screen and plunger area, 6 inches is blinded at head end.

TABLE 505. — COMPARISON OF EVANS WITH WOODBURY SYSTEM OF CONCENTRATION. MILL 162.

Machines.	Evans.	Woodbury.
	1 8mm. Trommel. 1 5mm. " 1 2½mm. " 1 Classifier. 1 Settling Box. 4 8mm. Jigs. 4 5mm. " 4 Fine Jigs.	1 8mm. Trommel. 1 Classifier. 1 " used as a jig. 3 jigs with Hydraulic Classifiers on each.
Total screen area jigs and classifier jig	18,252	5,040
Screen area retired by Woodbury system	.....	13,210
Ratio Woodbury to Evans sieve area	.....	1: 3.62
Trommel screen area	24,432	8,144
" " " retired by Woodbury system	.....	16,288

TABLE 506. — SUMMARY AND AVERAGES OF TEN TESTS ON WOODBURY SYSTEM AT MILL 162.

	Number of Sample.	Total. Gallons.	Total. Number of Tests.	Total. Pounds. Solid.	Rate per 24 Hours Pounds. Solid.	Percent of Total Weight of Feed.	Percent of Feed to Individual Machine.	Percent of Total Weight of Concentrates.	Assay. Percent Copper.	Assay. Percent Insoluble.	Percent of Total Copper in Feed.
Woodbury Classifier.											
Feed	1	1,446,609	10	4,871,100	442,827	.....	.....	.....	3.01	73.2	.....
Cup concentrates	2	514,152	10	32,448	2,950	0.67	.....	4.52	12.00	26.1	2.66
Middlings	3	526,792	10	2,477,600	225,236	50.86	.....	.....	1.58	84.1	26.74
Slimes	4	1,712,165	10	871,690	79,245	17.90	.....	.....	3.52	78.7	20.92
Slimy Water	5	627,493	10	13,550	1,232	0.28	.....	.....	4.32	74.7	0.40
Hutch product	6	606,950	10	1,516,200	137,836	31.13	.....	.....	5.11	57.0	52.93
Total	.....	3,987,552	10	4,911,488	446,499	100.84	.....	.....	.....	.....	103.65
Woodbury Jig.											
Feed	5 & 6	1,234,443	10	1,529,750	139,068	31.41	.....	.....	5.10	57.1	53.33
Cup concentrates	7	86,307	10	106,580	9,690	2.19	6.97	14.86	12.9	15.8	9.38
Hutch concentrates	8	416,122	10	578,320	52,574	11.87	37.80	80.62	8.98	15.4	35.43
Middlings, hydraulic	9	436,388	10	555,640	50,513	11.41	36.32	.....	1.74	84.6	6.61
Tailings	10	946,987	10	233,910	21,264	4.80	15.29	.....	0.76	90.9	1.22
Middlings, hutch	11	161,560	10	134,850	12,259	2.77	8.82	.....	2.68	81.2	2.46
Total	.....	2,047,364	10	1,609,305	146,300	33.04	105.20	100.00	.....	.....	55.10
Wilfley Table.											
Feed	11	161,560	10	134,850	12,259	2.77	.....	.....	2.68	81.2	2.46
Concentrates	12	23,211	10	29,920	2,720	0.61	22.19	.....	9.41	45.3	1.92
Tailings	13	43,507	10	104,793	9,527	2.15	77.71	.....	0.63	92.4	0.45
Head water	14	185,329	10	2,792	254	0.06	2.07	.....	2.25	84.6	0.04
Total	.....	252,047	10	137,505	12,501	2.82	101.97	.....	.....	.....	2.41

TABLE 506. — (*Continued*).

	Number of Sample.	Total. Gallons.	Total. Number of Tests.	Total. Pounds. Solid.	Rate per 24 Hours Pounds. Solid.	Percent of Total Weight of Feed.	Percent of Feed to Individual Machine.	Percent of Total Weight of Concentrates.	Assay. Percent Copper.	Assay. Percent Insoluble.	Percent of Total Copper in Feed.
Evans Jig.											
Feed	1A	1,474,298	10	4,171,200	379,200	.....	.....	.....	3.29	72.8	.....
Feed "A" tank	4A	939,979	9	305,500	33,444	8.66	.....	.....	3.25	81.6	8.47
" "B" "	4B	1,076,922	9	426,300	47,337	12.09	.....	.....	3.32	79.0	12.06
Tailings	10A	958,592	10	164,810	14,983	3.95	.....	.....	0.69	92.7	0.83

TABLE 507. — COMPARISON OF WOODBURY WITH EVANS SLIMES. MILL 162.

	Gallons per 24 Hours.	Solid. Pounds per 24 Hours.	Solid. Percent of Total Feed.	Solid. Percent of Total Weight of Slimes.	Copper. Pounds per 24 Hours.	Copper. Percent Copper in Total Feed.	Copper. Percent Copper in Total Weight of Slimes.	Average Assay. Percent Copper.	Average Assay. Percent Insoluble.	Average Assay. Grams per Gallon.
Slimes classifier No. 1	171,216	79,245	17.90	98.47	2,786	20.92	98.13	3.52	78.7	231
Slimy water classifier No. 2	62,749	1,232	0.28	1.53	53	0.40	1.87	4.32	74.7	10
Total Woodbury slimes	233,965	80,477	18.18	100.00	2,839	21.32	100.00	3.53	78.6	172
Feed "A" tank	104,442	33,444	8.66	41.75	1,103	8.47	58.75	3.25	81.6	147
" "B" "	119,658	47,367	12.09	58.25	1,571	12.06	41.25	3.32	79.0	180
Total Evans slimes	224,100	80,811	20.75	100.00	2,674	20.53	100.00	3.29	80.1	166

Another test made at the same place will serve as a comparison between the work done by the Woodbury system and that done by the Evans system. Table 504 gives details of screen, stroke, and speed of the Woodbury classifiers

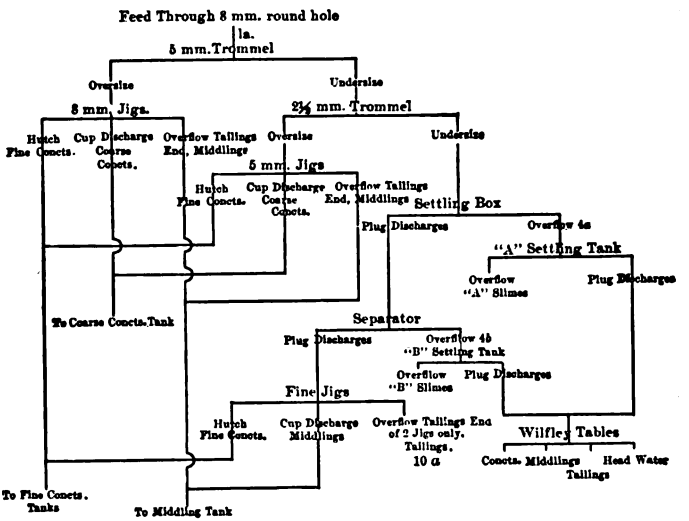

FIG. 727. — FLOW SHEET OF EVANS JIGS. MILL 162.

and jigs. Table 505 shows the equipment required for each system, and Table 506 gives a summary and average of ten tests on the Woodbury system. Figs. 727 and 728 show the general arrangement of the two systems at the time of the test, the numerals indicating the sample numbers found in the first column

of Table 506. A comparison between the slime product from the Woodbury system and that from the Evans system is given in Table 507.

§ 1190. Mr. G. Caetani [4] has furnished the data contained in Tables 508 and 509 showing the work done by a classifier jig at Mill 120. Table 508 gives the summary of a number of tests and Table 509 furnishes a sizing test of the tailings from the classifier jig.

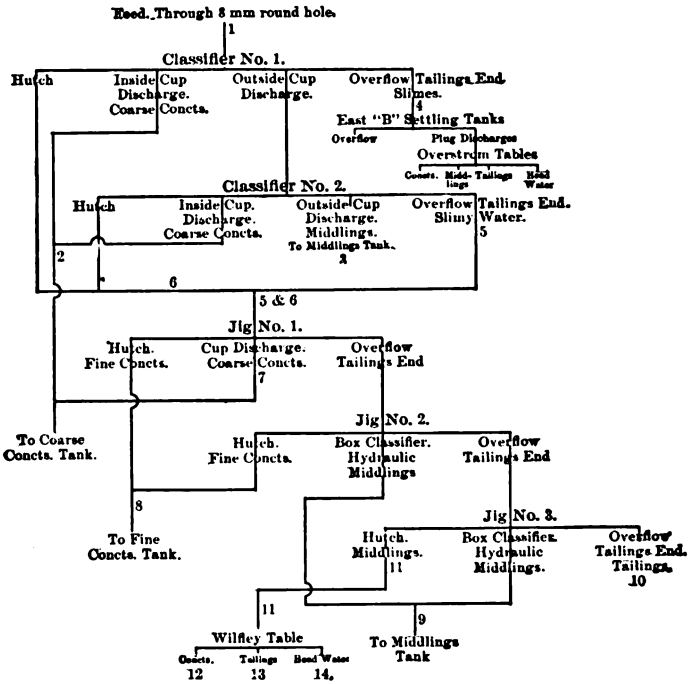

FIG. 728. — FLOW SHEET OF WOODBURY CLASSIFIERS AND JIGS. MILL 162.

TABLE 508. — EFFICIENCY OF CLASSIFYING JIG. SUMMARY.

Tonnage & Assays.	Average of Six Tests in which Middlings Amounted to 25 Percent of Feed.			Average of Nine Tests in which Middlings Amounted to 40 Percent of Feed.			Total Average of Tests.		
	Tons.	Lead Percent.	Ounces per Ton Silver.	Tons.	Lead Percent.	Ounces per Ton Silver.	Tons.	Lead Percent.	Ounces per Ton Silver.
Total tons treated	323.7	.....	.....	492.6	.....	.....	816.3	.....	.....
Feed to jig per 24 hours	53.9	15.89	6.39	54.7	16.76	6.79	54.4	16.39	6.23
Slime separated per 24 hours	2.03	19.74	10.21	2.77	21.15	10.12	2.47	20.71	10.17
Coarse concen. per 24 hours	4.91	47.65	17.67	6.27	42.00	15.78	5.73	43.95	16.43
Hutch " " " "	7.30	43.65	17.83	7.91	51.2	21.05	7.66	48.30	19.80
Coarse middlings per 24 hours	8.42	9.23	3.75	12.20	7.81	3.35	10.30	8.44	3.53
Hutch " " " "	5 03	10.82	4.60	9.84	10.00	4.16	7.43	10.28	4.31
Total " " " "	13.45	9.87	4.09	22.31	8.99	3.92	18.76	9.24	3.97
Tailings " " " "	26 30	3.08	1.48	15.65	2.06	1.05	19.90	2.60	1.28
Total	53.99	.....	.....	54.91	.....	.....	54.52	.....	.....

TABLE 509. — SIZING TEST OF TAILINGS AND FEED FROM CLASSIFIER JIG.

Size Millimeters or Mesh.		Feed. Percent of Material on Various Sieves.	Tailings. Percent of Material on Various Sieves.	Percent of Lead in Size.
Through.	On.			
.....	7	2.0	1.6	0.90
7	5	15.0	12.0	1.27
5	10 mesh	30.3	32.0	1.13
10 mesh	20 "	22.3	35.0	1.20
20 "	40 "	15.0	16.5	1.83
40 "	60 "	4.5	2.1	2.37
60 "	80 "	3.4	0.62	3.15
80 "	100 "	1.4	0.12	3.46
100 "	150 "	2.1	0.07	13.00
150 "	200 "	1.0	0.03	20.00
200 "	.....	3.0	0.14	20.22
Total	.....	100.0	100.18	.....

§ 1191. RICHARDS' PULSATOR JIG. — Tables 310 and 311 on pages 628 and 629 of Vol. I. show very conclusively that, when treating fairly closely sized products, the removal of the suction of the plunger jig results in an enormous increase in the speed of jigging. Suction is of great value when a hutch product is desired as in the case of jigging an unsized product. It is a drag, however, in that it cuts down the capacity of the jig enormously. It has been by working along this line that the pulsator jig has been evolved and put in shape for practical operation. The pulsator jig is, in a sense, derived from the pulsator classifier as described in § 1131 of this volume. It is not claimed that this machine does away with the Harz jig. When, however, it is possible to treat sized products, the pulsator jig with four pockets, each 4 inches square, is capable of doing the work of three double four-compartment Harz jigs occupying nearly 70 times the floor space, using 5 times the water and 5 times the power required for the pulsator. One square inch of screen area is moreover capable of doing the work of 200 square inches in the case of the Harz jig.

It is not claimed for the Richards pulsator jig that it can do cleaner work than the ordinary jig, but it is claimed that it will use much less water and occupy a marvelously small space compared to its capacity. There is a little crumbling of ore which goes into the tailings, but when the tailings are to be re-ground this may all be recovered. The tailings may, in any case, be screened and this saved. In other jigs the particles remain such a long time in the jig before they are finally discharged as concentrates that their corners and edges are rubbed off to a considerable extent, forming a large amount of fine material that is likely to be lost in the tailings. An illustration of this and a fact well known among jig men is that the material forming the bed of other jigs is worn round and smooth.

The sizes, capacities, etc., of the pulsator jig will be found in Table 510. The letters *J*, *K*, *L*, *N*, etc., in the table refer to similarly marked dimensions shown in Figs. 729*a*, *b*, and *c*.

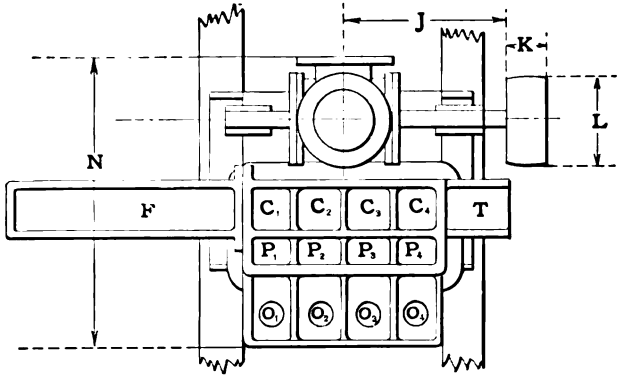

FIG. 729*b*. — PLAN.

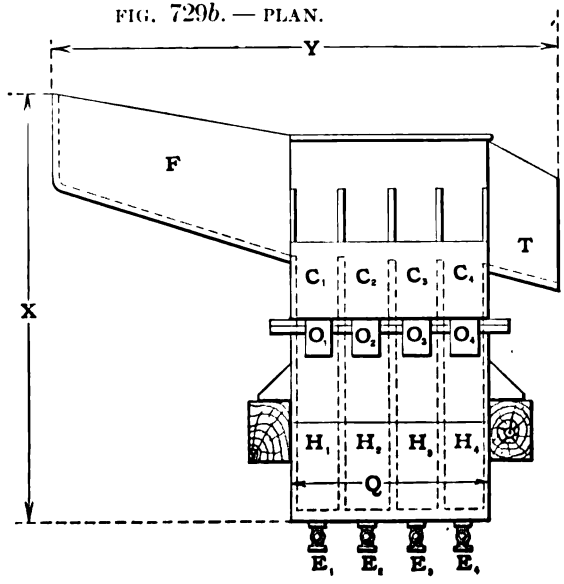

FIG. 729*a*. — RICHARDS' PULSATOR JIG. ELEVATION.

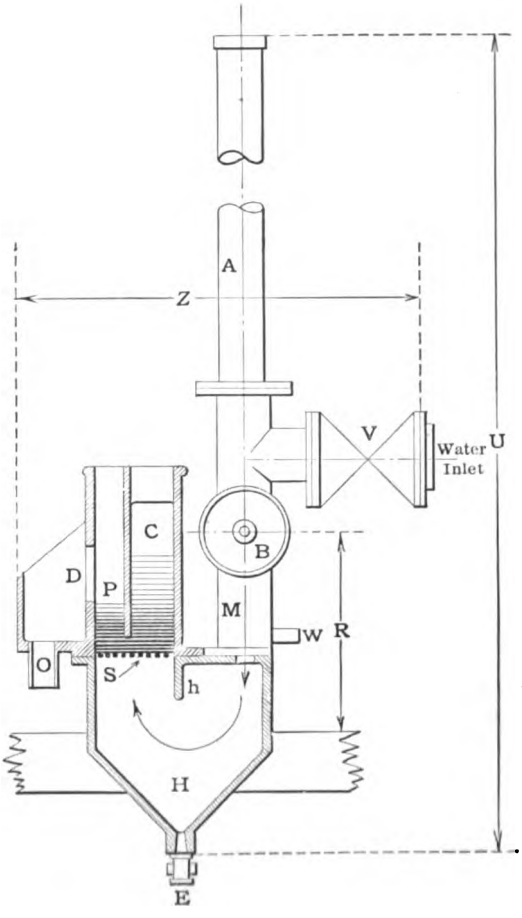

FIG. 729*c*. — SECTION.

TABLE 510. — RICHARDS' PULSATOR JIG. SIZES, CAPACITIES, AND DIMENSIONS — SEE FIGS. 729*a*, *b*, *c*.

Screen Surface Each Compartment.		No. of Compartments.	Approximate Capacity in Tons per 24 Hours.	Approximate Gallons Hydraulic Water per Minute.	Dimensions, Approximate Only—Inches.										Size of Main Water Pipe, Inches.
Wide, Inches.	Long, Inches.				J	K	L	N	Q	R	U	X	Y	Z	
2	2	4	10	8	.....	1½	8	18	10	.....	58	26	30	22	2
2	2	6	13	10	.....	1½	8	18	15	.....	58	26	35	22	
3	3	4	40	30	12	3	8	22	14	20	82	34	34	28	2½
3	3	6	55	40	12	3	8	22	21	20	82	34	41	28	
4	4	4	90	70	14	4	8	26⅜	18½	25	103	42	50	34⅜	3
4	4	6	120	90	14	4	8	26⅜	27½	25	103	42	56	34⅜	
9	5	4	200	150	18	5	10	32	22½	35	112	48	54	45	4
9	5	6	275	200	18	5	10	32	33¾	35	112	48	62	45	
14	6	4	400	300	21½	6	12	39½	26½	45	132	54	60	56	6
14	6	6	530	400	21½	6	12	39½	40½	45	132	54	74	56	

Figs. 729*a*, *b*, and *c* show the jig in elevation, plan, and section. *H* represents the hutch which is of the familiar form, with diving board *h*. The screen is located at *S*, as in the Harz jig. The compartments C_1, C_2, C_3, C_4 are located above the screen and communicate with corresponding pockets P_1, P_2, P_3, and P_4. The dividing plate between *P* and *C* reaches nearly to the screen and acts as a seal or gate for the concentrates which rise in the pockets *P* and discharge through adjustable gates *D* into *O* and thence out to suitable launders.

In place of the usual plungers and eccentrics, there is connected at the top of the hutch a manifold *M*, by which water supplied through the valve *V* is distributed to each of the four compartments of the jig through four plug cocks connected to the branch flanges of the manifold. The water from the main supply pipe, which should be under a head of 30 feet or more, passes through the gate valve *V* to the manifold *M* under control of the revolving pulsator valve *B*. The valve *B* corresponds in function to the plungers in the ordinary jig, yet in its action is radically different, in that it gives pulsations of an entirely different character and in one direction only.

The screen *S* is made up of two layers of brass woven-wire cloth, the lower one being 4 mesh and the upper one 20 mesh. In consequence of the fine screen used in this jig practically no hutch product is made, all the concentrates being discharged in the pockets P_1, P_2, P_3, P_4 and out through *D* and *O* as explained below.

§ 1192. *Operation.* — The material fed to the jig enters through the hopper or trough *F* over the division plates between the compartments C_1, C_2, C_3, C_4, and out at the tailings gate *T*. In passing through from *F* to *T*, as above described, the particles are subjected to the jigging action of the upward pulsating current of water through the screen *S*, with the result that the heavy mineral particles settle in the compartments C_1 to C_4 and the lighter gangue is carried over and out at the tailings gate *T*. The heavy particles settle in C_1 to C_4 in the ratio of their specific gravity, that is, the heaviest mineral will be found in C_1 and the lightest mineral in C_4. The discharge of concentrates or heavy mineral is effected by extending the screen, and consequently the jigging action, across under the pockets *P* (see sectional view). All the particles of both mineral and gangue in *C* are kept in agitation, the mineral being at the bottom and the gangue on top. The mineral at the bottom flows under the division between *C* and *P* into *P*, by reason of the pressure due to the height of the column of material in *C*. Eventually the height of the material in *P* would become almost as great as *C*, but for the gate at *D*, which allows the mineral from *P* to discharge. By adjusting the height of the gate *D*, the concentrates from *P* are discharged as fast as they accumulate in the bottom of *C*, the flow from *C* to *P* being maintained by the difference in head in *C* and *P*.

This very simple method of discharging the concentrates explains also why it is possible with the pulsator jig to feed lean or rich ore, or to stop the feed altogether and then start again without readjustment of the machine.

The bed of material — which in *C* may be as deep as 10 inches — will cease discharging concentrates or mineral as soon as the level of the material in *C* drops to the level of the gate *D*. If gangue only is fed to the jig, then it passes over the bed and out at the tailings gate. If mineral and gangue are fed to the machine, the mineral accumulates in *C* and disturbs the balance between *C* and *P* until a sufficient amount of mineral is discharged at *D* to compensate for that which came into *C*. The gangue that came in with the feed is carried over and out the tailings gate.

§ 1193. *Size of Feed.* — In general the feed to the pulsator jig should be screen sized to the same ratio of maximum and minimum particles as for jigs of the Harz type. At the present time the smallest size material treated is 1 millimeter, and this is being done in a 4-inch four-compartment jig having a capacity of 90 tons per 24 hours. The maximum size as yet treated is 12 millimeters. It seems highly possible that 1-inch material may be treated successfully in the larger-sized jigs, *i.e.*, 9 and 14 inch.

§ 1194. *Depth of Bed.* — The depth of the bed carried on the ordinary Harz jig will probably average from 4 to 5 inches. The bed carried on the pulsator jig will average 8 to 12 inches. This feature of being able to carry such a deep bed makes the performance of the machine less subject to fluctuation, with the result that having once been adjusted for a certain class of ore, this adjustment may remain unchanged while the ore fed to the jig may be lean or rich, or, in fact, may cease altogether, and yet the jig will operate perfectly under all these widely varying conditions. In fact, with some of the first jigs made it was possible to leave the jigs in operation for weeks at a time without changing a single adjustment. The ordinary jig has such a thin bed that the concentrates discharge is decidedly non-regulative and very sensitive to any change in the richness or the quantity of the feed.

§ 1195. *Tests on Pulsator Jig.* — The author had hoped to be able to give, at this point, a complete mill test showing the work that is being done by the machine in the mills. The only complete test that has been made under mill conditions was made with the pulsator jig treating the fourth, fifth, and sixth discharges of the pulsator classifier. This procedure has been condemned by the author, whose contention is that the machine is only suited to the treatment of sized products. In justice to the machine, therefore, these figures must be omitted. When treating sized products the pulsator jig at Mill 162 has received feed carrying 2.3% copper delivering four concentrate discharge products assaying 11.45, 17.4, 15.0, and 12.4% copper respectively. The tailings were re-ground for further treatment. The author has conducted a test upon the single-pocket pulsator jig in the laboratory of the Massachusetts Institute of Technology. This test was made upon a Missouri lead ore with limestone gangue. The material treated was carefully sized through 4 millimeters on 2 millimeters. The results obtained in this test are given in Table 511.

TABLE 511. — PULSATOR JIG TEST ON MISSOURI LEAD ORE.

Product.	Weight. Kilograms.	Percent. Lead.*	Weight. Lead. Kilograms.	Percent. Total Lead.
Feed	27.02	11.92	3.220	100.00
Concentrates	3.52	76.12	2.679	83.19
Tailings	23.50	2.30	0.541	16.81
Totals	27.02	.....	3.220	100.00

* All lead assays by permanganate method.

The first crude machine was installed in February, 1908, and in the short time that has elapsed since then the machine has been undergoing constant development. It is at present in successful operation in Mill 162 and in a number of other important mills. Complete data with regard to actual tests in these mills are not, however, at present available.

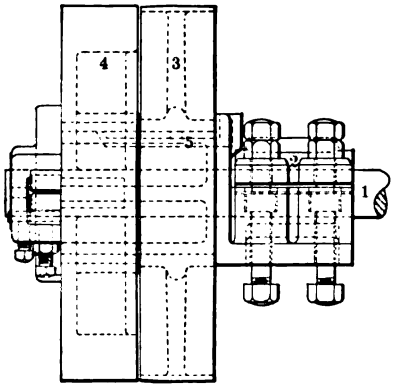

FIG. 730*a*. — SIDE ELEVATION. QUICK RETURN MOTION MECHANISM.

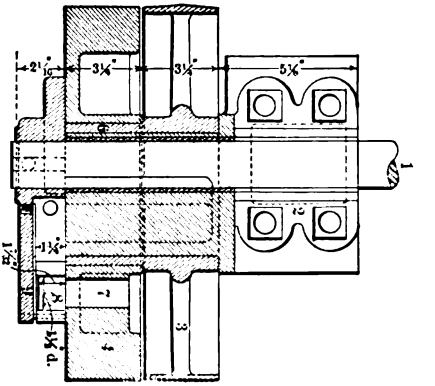

FIG. 730*b*. — SECTION.

§ 1196. DIFFERENTIAL-MOTION VARIABLE-CRANK MECHANISM.[3]— This motion is employed on the Woodbury slime classifier and clean-up jigs as well as upon the Hodge jig used in the Lake Superior mills. Referring to Figs. 730*a* and *b* we have the shaft (1) supported by and running in the box (2). The lower part of the box is extended laterally, forming an eccentric disc on which the pulleys (3) and (4) are free to revolve. An oil hole (5) permits of easy

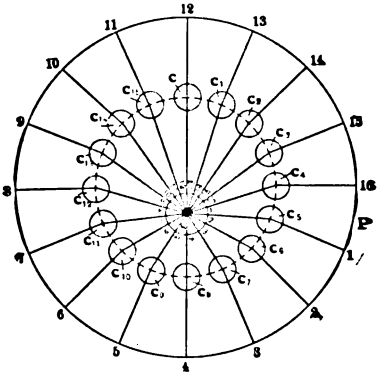

FIG. 731. — DIAGRAMMATIC REPRESENTATION OF ACTION OF DIFFERENTIAL-MOTION VARIABLE-CRANK MECHANISM.

lubrication and the pulley (4) is provided with a bronze bushing (6). The driving pulley (4) has a crank pin (7) by means of which a differential motion is given the shaft (1) through the sliding block (8) and arm (9) keyed securely to the shaft (1). The action of this mechanism may be more readily understood if we look at the diagram in Fig. 731. In this diagram *P* represents

the driving pulley, s, the shaft (1) of Figs. 730a and b and c, c_1, c_2, etc., different positions of the crank pin as the driving pulley revolves. Now let us suppose the pulley P to be revolving at a uniform speed. It is evident from the diagram that the pulley in revolving from 1 to 7 or $\frac{6}{16}$ of one revolution, will have caused the shaft s to have revolved one-half a revolution, the other half revolution being caused by the revolution of the driving pulley from 7 to 16 and to 1 again. This gives to the shaft s an accelerated and retarded motion which is in turn conveyed to the jig plungers by means of plain eccentrics.

§ 1197. JIG DISCHARGES. — At the Mill 137[6], the discharge of the concentrated material from the jigs is made by pipe discharge for the coarser grains, and in the case of the finer grains partly through a pipe discharge and partly as hutch product. The pipe used for the discharge varies in diameter from 13 to 51 millimeters, according to the classes treated. As shown in Fig. 732, it is placed,

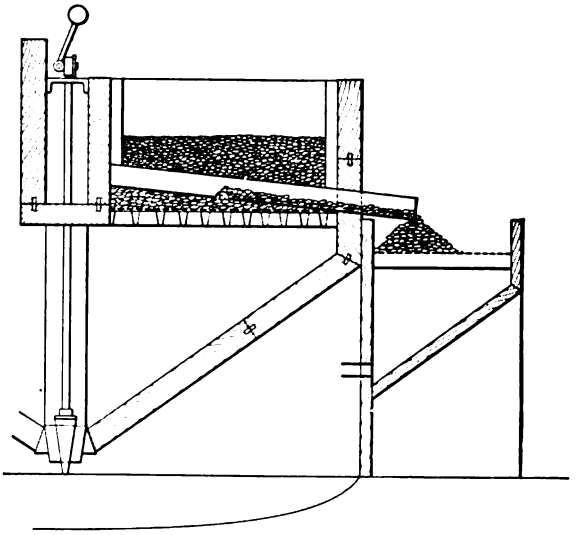

FIG. 732. — MONTEPONI JIG DISCHARGE.

slightly inclined toward the outside, and transversely to the screen, at about half the height of the layer of grains. On the bottom of the pipe, over the middle of the screen, a hole is bored, through which the grains with the water rise through the pipe and flow away. The discharge is made at intervals, especially in the case of the small sizes, and is plugged when tailings are found mixed with the concentrates.

The jigs treating grains larger than 10 millimeters have two pipe discharges, one for each compartment, and the division between the compartment is raised only as high as the pipe, to allow free movement to the upper layer. The first pipe discharges principally a mixture of galena, barite, and cerrusite, while the second discharges smithsonite and calamine. These products fall directly upon screens where they are sorted giving finished products.

§ 1198. JIG BEDS. — The Canton Malleable Iron Company of Canton, Ohio, makes iron balls for jig beds. Mill 183 uses about 800 pounds of half-inch cast-iron balls per month on Harz jigs. They tried 1-inch balls, then $\frac{3}{4}$-inch, and finally adopted the $\frac{1}{2}$-inch size as it gave better concentration than the larger sizes.

§ 1199. PUNCHINGS from boiler plates and screen plates have been tried for use at Mill 127 as jig beds on Hancock jigs and have proved a success. These punchings can be obtained of the screen makers in a great variety of sizes, thus enabling the jig man to grade the size of the bed very closely to suit the needs of the jig.

BIBLIOGRAPHY OF JIGS.

1. Allis-Chalmers, Milwaukee, Wisconsin. Bulletin No. 1403. Description of Hancock jig.
2. American Concentrator Company, Joplin, Missouri. Bulletin 11. Description of the New Century Jig.
3. Benedict, C. H., Lake Linden, Michigan. Private communication concerning Lake Superior jigging practice.
4. Caetani, G., San Francisco, California. Private communication with regard to classifier jigs.
5. Denver Engineering Works Company, Denver, Colorado. Bulletin 1041. Richards Pulsator jig.
6. Ferraris, Erminio, Monteponi, Sardinia. Private communication concerning jigging practice in Sardinia.
7. Fried. Krupp Grusonwerk, Magdeburg-Buckau, Germany. Private communication, also blue-prints and photographs of jigs.
8. Goodale, C. W., Butte, Montana. Private communication giving details concerning various tests.
9. Leach, Robert H. Britannia Beach, B. C. Private communication with regard to the use of Hancock jig.
10. National Concentration Company, Milwaukee, Wisconsin. Bulletin No. 4. Description of the Woodbury system.
11. Ricketts, L. D., Cananea, Sonora, Mexico. Private communication with regard to the Hancock jig.
12. Stone, George H., New Jersey Zinc Company. Private communication concerning the use of the New Century jig in the treatment of zinc ores.

CHAPTER XXXVI.

LAWS OF JIGGING.

§ 1200. HINDERED SETTLING. — The general principles governing hindered settling have been discussed in Vol. I., pages 610 to 627, also in Chapter XXXIII of this volume. There remains, however, something to say concerning hindered settling in its relation to the problem of jigging.

§ 1201. PULSION AND SUCTION. — Pulsion and suction constitute the only reactions taking place in jigging. Of these two reactions pulsion is the more important one. Suction is a supplementary reaction which may be made use of in certain cases to advantage and which is absolutely essential to a good separation when treating mixed sizes. In case of closely sized products, suction is a positive disadvantage and may be dispensed with, thereby greatly increasing the capacity.

§ 1202. PULSION. GENERAL PRINCIPLES. — It has been clearly demonstrated both by the author and other investigators that under the reaction of pulsion with mixed sizes of grains of different specific gravities certain definite positions are established according to diameters. Thus in the case of quartz and galena, R. P. Jarvis,[2] using galena having a specific gravity of 6.6 and quartz with a specific gravity of 2.62, has determined this diametral ratio to be 5.8 to 1. The author's latest determination, using galena with a specific gravity of 7.5 and quartz with a specific gravity of 2.64, is, as has been stated in § 1167, 6.9 to 1, which, taking into consideration the greater specific gravity of the heavy mineral, is practically the same as the ratio obtained by Mr. Jarvis. All the work that has been done by the author, and the very complete series of tests made by Mr. Jarvis, indicate conclusively that in order to effect a perfect separation by pulsion alone, the grains should be sized between the limits of the hindered-settling ratios. Under these conditions and with the proper pulsion velocity the separation is complete. If the minerals are not sized or are not sized within the proper limits, the separation cannot be complete, but a definite arrangement of grains will result and equilibrium will be attained when the grains are arranged in accordance with their hindered-settling ratios.

§ 1203. PULSION VELOCITY. — The full-teeter velocities given in Table 497 may be used to determine the proper pulsion velocity suited to any particular case in hand. H. S. Munroe gives a formula $V = 0.833\sqrt{D(\delta - 1)}$ where V = velocity in meters per second, D = diameter in meters, and δ = specific gravity of the mineral in question. This formula may be safely used for computing the mean plunger velocities of jigs within the range of sizes usually jigged. It cannot, however, hold below the range in which Rittinger's formula applies (see § 1163), and probably fails to hold even before that limit is reached. It may be written for convenience, $V = 26.32\sqrt{D\ (\delta - 1)}$ where V and D are given in millimeters rather than in meters. This formula gives substantially the same figures for full-teeter velocities as those given in Table 497. As the result of a considerable number of experiments in which the piston speeds during pulsion and suction were not the same, Mr. Jarvis [2] concludes

that the best results are obtained by properly balancing the two. The eccentric giving equal mean velocities yields about as good results as any of the accelerated strokes, at least within the range of sizes (2 mm. to 0) treated by Mr. Jarvis. The reader's attention is called to the statements made in Vol. I., page 639, with regard to accelerated-motion jigs and to the investigation of pulsion and suction on pages 632 to 638 inclusive.

§ 1204. SUCTION. GENERAL PRINCIPLES. — On pages 627 to 630 of Vol. I. the author has given a discussion of the general principles of suction as applied to jigging and has related the results of the tests which he has made. Gust. G. Bring [3] has repeated many of these experiments and has carried the tests further in the endeavor to throw light upon the relations existing between hindered settling and the so-called interstitial ratios as well as upon the laws of jigging in general. It is, therefore, of interest to review here briefly the work of Bring and for a fuller discussion of his work refer the reader to the original article.

§ 1205. BRING'S TESTS. — In order to study the action of downward and interstitial currents on a jig, Bring proceeded as follows.[5] To determine the influence of the down-going currents Bring made use of an ordinary continuous jig. A sieve with 7-millimeter holes was used with a bed of 8- to 10-millimeter grains. The material to be jigged had passed through a 5-millimeter screen, but was otherwise just as it came from the crusher. The tests were carried on with limestone of 2.72 specific gravity, granite of 2.60, and magnetite of 5 as testing material. In all his experiments Bring found that the grains of magnetite in the hutch product were of larger diameter than the grains of limestone. He, moreover, reaches the following conclusions:[4]

(1) Increased thickness of the bed causes decreased "hutch," with less diameter and smaller factor (the ratio of the diameters of the heavier and the lighter material).

(2) Increased size of the bed grains causes greater amount of hutch, lower percentage of metal in the hutch, greater diameters, but smaller factor.

(3) Decreased quantity of testing material causes increased amount of hutch, greater diameters, and smaller factor.

(4) With more limestone in the crude mixture there is a lower percentage of concentrates in the hutch, larger diameters, and larger factor.

(5) With more magnetite in the mixture: greater percentage of metal, smaller factor.

(6) Smaller size of limestone: more hutch, lower percentage of metal, less diameter of the magnetite grains, but larger of the limestone grains, less factor.

(7) Increased number of revolutions: more hutch, higher percentage of metal, less diameters, and a considerably increased factor.

(8) Increased length of stroke: more hutch, higher percentage, larger diameters, and larger factor.

(9) Increased specific gravity of the lighter material: increased diameter, smaller factor.

(10) Elimination of the fine limestone grains: less hutch but a greatly increased percentage of metal.

Finally Bring concludes that in a modern jig the up-going and down-going currents cause the separation. In the coarse jig the former have the greater influence; in the fine jigs, the latter.

It cannot be denied that the European practice of sizing the ore to a very high degree before jigging is now slowly changing, as it has been found that it only complicates the plant without being of any benefit, particularly if the difference between the specific gravities of the minerals to be separated is great. For this reason it seems best to offer a little further explanation of the action which takes place in the act of jigging.

TABLE 512. — COMPARATIVE POSITION OF QUARTZ AND GALENA GRAINS IN A JIG BED AT INSTANT OF PULSION.

Size mm. Average Grain Galena.	Size mm. Average Grain Quartz.	Current Velocities at Full Teeter mm./sec.
.....	0.175	5.22
.....	0.22	6.11
.....	0.26	7.28
.....	0.32	10.19
.....	0.41	14.41
0.135	.....	15.05
0.175	.....	19.50
.....	0.51	19.86
.....	0.63	24.60
.....	0.76	28.10
0.22	.....	30.5
0.26	.....	30.8
.....	0.91	33.0
.....	1.04	36.4
.....	1.19	42.6
0.41	.....	45.7
0.51	.....	44.9
0.63	.....	47.8
.....	1.37	53.3
.76	.....	59.8
.....	1.55	60.3
.....	1.85	61.5
0.91	.....	65.0
1.04	.....	66.1
1.19	.....	72.0
.....	2.28	72.8
.....	2.66	72.8
.....	2.83	78.4
.....	3.53	86.0
.....	4.17	92.8
1.37	.....	97.1
1.55	.....	100.4
1.85	.....	116.5
2.28	.....	181.0
2.66	.....	177.2
2.83	.....	190.0
3.53	.....	218.4
4.17	.....	229.6

Let us look for a moment at Table 512. In the first column of this table we have a series of sizes of galena grains expressed in millimeters, the full-teeter velocities of which are given in column three. In the second column we have the same series for quartz. Now let us for the moment imagine that we have these grains on the sieve of a jig, the sieve having, let us say, openings 1 millimeter in diameter. On page 630 of Vol. I. it is stated that the author has determined upon 3.50 as the best value that can be given for the interstitial ratio, that is to say 1-millimeter grain of quartz is the largest grain that can be sucked through the interstices between 3.50-millimeter grains of galena. In other words, if we imagine the grains at the moment of pulsion poised in the order shown in the table we shall see that the galena grains from 0.91 millimeter down will be sucked through the sieve, leaving on the sieve as a bed the galena grains larger than 1 millimeter in size. Now the interstitial space through which the quartz grains can be sucked is virtually the space between the 1-millimeter grains of galena as at the moment of suction the bed becomes quickly compacted. This then means that the largest grain of quartz that will be sucked through into the hutch is somewhere in the neighborhood of 0.3 millimeter in diameter. A grain of this size may get through into the hutch, since the heavy galena grains are the first to settle, and there are innumerable chances for the 0.3-millimeter grains to get beneath the larger quartz grains at the moment of suction.

If now we apply this reasoning to the conclusions arrived at by Bring, we are able to see the reasons for the results which he has obtained.

R. P. Jarvis [2] says with regard to suction: "Suction due to the movement

of water columns supplements gravity. Resisting the sum of these two forces is the resistance of the walls of the tube through which the grain must pass. The reaction, as a whole, must therefore be a resultant. The chief components are the force of the water columns, which are purely non-selective, but act with equal intensity upon all particles of the same weight and size, regardless of their specific gravity and weight. Any advantage that the small heavy grain would have over a large light one would, of course, appear in the resultant, tending to carry it to the hutch. The effect of the forces opposing the movement of the grain depends upon the character of the grain, and the conduit through which it is supposed to pass. Under any condition the diameter of the grain cannot be greater than that of the conduit. If the channels are crooked and zig-zag, as in a jig bed, the particles will more easily lodge against the sides of a tube large enough to pass the grains if vertical. Thus suction, due only to the moving columns of water, constitutes a powerful impelling force to carry through the interstitial spaces those particles which under the force of gravity cannot move."

§ 1206. EFFECT OF JIG BED. — From the last paragraph it is clear what effect bedding has upon the result. Any portion of the ore column which remains fixed during the period of pulsion presents a mass of irregular tubular channels variously inclined. The result of thickening or thinning the bed, or of increasing or diminishing the size ratio between bedding and feed, is self-evident. Thickening the bed makes it more difficult for suction to do its work. Thinning the bed has the opposite effect. An increase in the size ratio between bedding and feed grains means larger and freer channels through which material may be sucked into the hutch. A decrease of this ratio has the opposite effect. The shape of the ore particles constituting the bed also has an important effect. Any part of the bed which is free to pulsate may be considered as part of the ore column and amenable to all conditions applying to the reaction of pulsation. The work done by Bring shows these points very well.

§ 1207. SIZING BEFORE JIGGING. — The general practice of the day tends toward a more general application of the English system or the use of the jig in the treatment of unsized material instead of the hydraulic classifier. While the treatment of material sized between wide limits is possible and thoroughly practicable, still the advantages resulting from a preliminary sizing cannot be denied. In the English system itself, when the hutch products of one jig are treated upon another, use is made of a preliminary sizing. Again, in order to jig an unsized product suction is necessary to affect a separation, and suction results in cutting down the capacity enormously. The arguments that have been advanced for the adoption of the English system on the ground that equal-settling ratios, many times larger than those obtained under free-settling conditions, exist on a jig bed, have been amply disproved. It may be stated that both systems have distinct advantages and that the method adopted will depend largely upon the particular conditions existing in each case.

BIBLIOGRAPHY FOR LAWS OF JIGGING.

1. *Am. Inst. Min. Eng., Trans.*, Vol. XVII., (1888-9), p. 637. H. S. Munroe. The English versus the Continental System of Jigging. Discussion of the laws governing jigging with mathematical analysis of the same.
2. *Ibid.* Bulletin No. 23, September, 1908, p. 697. Royal Preston Jarvis. Investigation on jigging. Account of a very extended series of tests made for the purpose of investigating the action of the plunger jig.
3. Bring, Gust. G., Falun, Sweden. Private communication with regard to suction tests.
4. *Eng. & Min. Jour.*, Vol. LXXXV., (1908), p. 641. N. V. Hansell. Experimental studies on the work of water jigs. Abstracted from paper by Gust. G. Bring in the Jern Konterets Annaler, (1906), p. 321.
5. Jern Konterets Annaler (1906), p. 321. Gust. G. Bring. Experimentella Studier öfver Sättmaskinens Verkningssatt.

CHAPTER XXXVII.

FINE SAND AND SLIME CONCENTRATORS.

§ 1208. CLASSIFICATION.* — Concentrators for fine sand and slimes may be classified according to the following principles of action:

I. Mechanical agitation of pulp, jerking motion of surface, transportation of separated grains by water current.

CLASS A. WILFLEY GROUP. — Agitation to stratify according to specific gravity. Jerking motion advances the concentrates at right angles to water current. The water flow carries the tailings down the slope across the line of jerk.

CLASS B. END BUMP GROUP. — Agitation for stratification. Jerking motion carries concentrates up the slope. Current of wash water carries tailings down the slope.

II. Mechanical agitation of pulp, traveling surface, water current.

CLASS C. VANNERS. — Agitation for stratification. Travel of surface carries concentrates upward; water current carries tailings downward.

CLASS D. AGITATION FOR STRATIFICATION. — Travel of surface across flow of water carries concentrates, and flow of water down the slope carries tailings.

CLASS E. FILM SIZERS. — The feed is a classified product with small grains of heavy mineral which are carried by the traveling surface across the wash-water current. The larger waste grains travel downward with the flow.

III. Current transportation without mechanical agitation. Intermittent, require stopping for removal of concentrates.

CLASS F. FRAMES, CANVAS, CARPET, AND BLANKET TABLES. — The feed is classified pulp. The heavy grains drop and stay on the surface while the light grains go forward.

CLASS G. BUILDING BUDDLES. — Feed is classified pulp. The smaller heavier grains settle in the upper part, the larger, lighter grains roll down. The bed of sand is allowed to build to a deep layer.

CLASS H. SLUICE RIFFLES. — Agitation by a water current flowing over an uneven surface. The heavier particles settle into catch pockets, the lighter pass on.

IV. Mechanical agitation without transporting current, also intermittent.

CLASS I. KIEVES. — Agitation of a deep mass of thick fine pulp. The particles of high specific gravity settle.

I. MECHANICAL AGITATION OF PULP. JERKING MOTION OF SURFACE. TRANSPORTATION OF SEPARATED GRAINS BY WATER CURRENT.

§ 1209. In this first group of machines no new design in end-bumping tables has come to the notice of the author. On the other hand, the riffle jerking tables have been greatly developed.

* The above is substituted for the classification used in Vol. II, page 644, which proved entirely inadequate.

A. WILFLEY GROUP.

§ 1210. PRINCIPLES OF ACTION. — The tables of this class all utilize the following principles of action: 1. Agitation to separate the grains into layers; the heavy concentrates grains going into the lower layer, and the lighter waste grains into the upper. 2. The use of riffle grooves which are parallel to each other and are long and narrow, and may be produced either by tacking on cleats, or by cutting grooves in wood, or casting grooves in rubber, metal, or other surfaces. 3. A jerking motion in the direction of the riffle grooves, which impels the grains toward the concentrates side of the table, giving a greater motion to the under concentrates grains than to the upper waste grains. 4. A current of water flowing down hill across the riffle grooves. This washes the upper waste grains down the slope of the table much faster than the under concentrates grains.

These tables are further subdivided into two groups according to the means by which the grains are made to take a diagonal path. *a.* By using tapered riffle cleats or ridges with their tips in a diagonal line; *b.* By other means.

NOTE. — For the sake of uniformity of description, the upper side of the table is here called the feed side, and the lower side is called the tailings side; the side where the concentrates are discharged, the concentrates side; and the side to which the mechanism is attached, the mechanism side. The space above the riffle cleats forms the roughing plane. The chief function in the deep-bed section of this plane is to give capacity by allowing the wash water to carry to waste a maximum quantity of gangue. The surface between the riffle cleats, and including the upper and perpendicular edge of each riffle cleat, forms the cleaning plane. Its main function is to support the pulp during its progression, while it is being cleaned by the wash water. The unriffled surface may be called the cleaned-ore plane. Its function is to receive and transport the cleaned concentrates to the concentrates box. No cleaning is done after the ore passes beyond the ends of the riffle cleats.

I A *a.* — *Tables Using Tapered Riffle Cleats Terminating in a Diagonal Line.*

§ 1211. WILFLEY TABLE. — The original Wilfley table [4] was made by Arthur R. Wilfley, and in May, 1896, was used by the maker in his mill at Kokomo, Colorado. The first table sold was installed in August of the same year, in the Puzzle mill, at Breckenridge, Colorado. Since then over 12,000 have been sold. This machine has revolutionized ore dressing and as such is a phenomenal success.

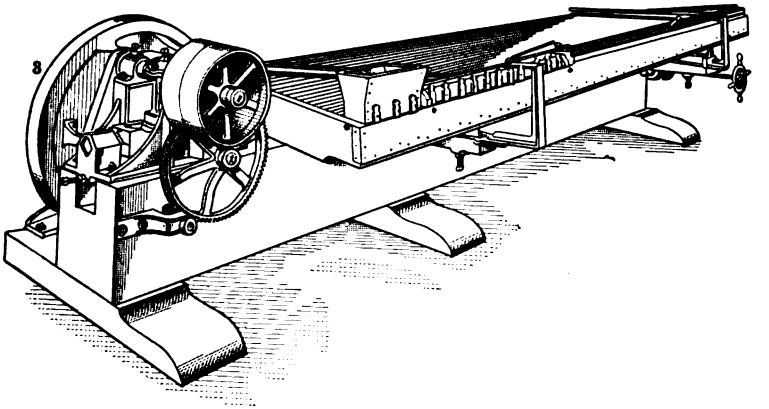

FIG. 733. — NO. 5 WILFLEY TABLE.

The original form and forerunner of all modern shaking tables with longitudinal riffles, described in Vol. II. of Ore Dressing, pages 670 to 676, has been greatly improved. The latest type, known as Wilfley No. 5, is illustrated by Fig. 733 and may be described as follows:

§ 1212. *Foundation.* — As the deck of the table vibrates about 240 times a minute, it is necessary to provide a substantial support for the same which

is sufficiently rigid to confine the vibrations to the deck. The success of the table depends largely on smooth deck action in the plane which has been found best adapted for the ore treated. The support [30] of the Wilfley table is a solid beam of Oregon pine 12 × 16 inches in cross-section and 15 feet long. To this beam are bolted the driving mechanism, two iron chairs, which hold the tilting frame, and three strong timber legs. The spring of the wood securely holds the bolts in place. This support is ample in all respects and, when securely bolted to a solid foundation, does not vibrate when the deck is in action.

§ 1213. *Head Motion.* — The driving mechanism [25] of the No. 5 Wilfley consists of a crank shaft, a pitman *P*, and two toggles *A* and *B*, as shown in Fig. 734. One of these toggles acts between one side of the pitman and an abut-

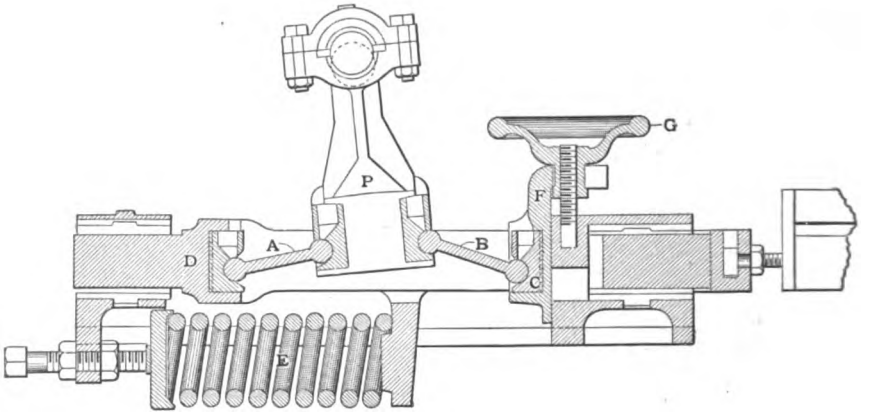

FIG. 734. — WILFLEY TABLE HEAD MOTION.

ment *C*, which is bolted to the foundation sill; the other toggle acts between the other side of the pitman and the yoke *D*, which is connected by a thrust rod and two nuts to the table top. Motion is imparted to the table deck by the pitman, driven up and down on the crank, acting through the two toggles, which are held in train by the spring *E*. The function of the spring is to take up loose motion in the toggles and should be kept in the lightest tension possible to accomplish this. The spring causes no part of the motion. The entire movement, including the elevator (see § 1216), is self-contained and mounted upon a cast-iron base. The framework is securely bolted to the girder, making all lost motion impossible. The wearing parts are made of a hard chilled iron, the lower box being adjusted by one set screw. The main bearings upon the eccentric shaft are adjusted and tightened by means of a set screw. Ample oil reservoirs are provided on all bearings and the boxes are constructed grit proof.

The velocity of the table deck varies with the length of stroke and the speed of the crank shaft. When the toggles diverge most from a straight line, the motion is most rapid; while the motion is slowest when the toggles are in a position nearest to a straight line. The result is that the deck reverses its direction with a maximum velocity at one end of the stroke of the pitman and with a minimum velocity at the other end of the stroke. It is this quick return which causes the progression of the pulp. A considerable variation in the energy of the throw can be brought about by an adjustable sliding piece *F* on the abutment which elevates or depresses the end of the toggle *B*. This piece is adjusted by means of a hand wheel and screw *G*. When the divergence of the toggles is increased the jerk is stronger and when decreased the throw is weaker.

§ 1214. *Tilting Frame.* — A tilting frame or its equivalent is necessary to vary the side slope of the table top to meet the variations in the feed. The deck rests on four vertical iron rockers, which stand on two iron tilting beams. These beams rest in two iron chairs which are bolted to the supporting beam. These tilting beams may be adjusted by a hand wheel to any desired slope, and the deck slopes with them. As the feed varies, the slope of the deck may be adjusted so that the line of separation of the concentrates can be held coincident with the riffle tip ends.

§ 1215. *Deck.* — The table deck or top, shown in Figs. 735 and 736, is made of narrow strips of redwood, screwed diagonally to a light, strong frame, and connected with the head movement by means of a draw rod. It is made rigid by three wood-filled, pressed-steel ribs running the full length, supported by two transverse trusses. This construction is staunch and light and does not warp. The form of the deck of the No. 5 Wilfley table is a trapezoid, the feed side being

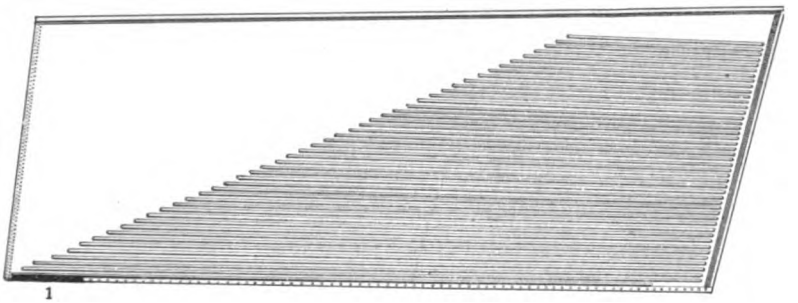

FIG. 735. — DECK OF NO. 5 WILFLEY TABLE.

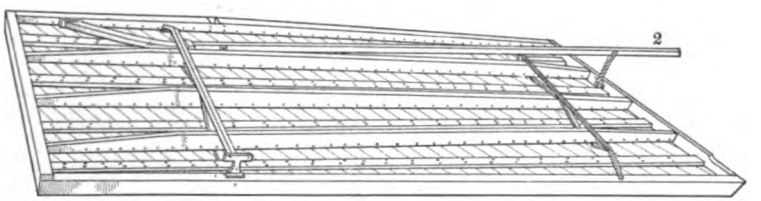

FIG. 736. — DECK CONSTRUCTION OF NO. 5 WILFLEY TABLE.

cut off in a diagonal line. The ribs and deck must essentially be light to yield readily to the rapid oscillating motion imparted by the movement. The surface must be one that will have a proper holding action on the minerals and at the same time be durable, impervious to water, and easy to replace. For these reasons the deck is covered with linoleum which was adopted as the best substance for the work. Years of continuous service on concentrating tables have proved its value, as it has been found to combine all the requirements mentioned and is peculiarly sensitive to the friction of ore particles upon its surface.

A series of tapered riffle cleats, ending along a diagonal line, are placed upon the linoleum surface forming a combination of a riffled portion and a plain surface. The cleats, made of sugar pine, are tacked with small brads to the linoleum surface, the longest cleat being along the lower or tailings side extending the full length of the table. For ordinary ores this cleat is 0.5 inch high by 0.25 inch wide at the mechanism side and tapers uniformly to a feather edge at the concentrates side. From this line each successive cleat is spaced evenly at 1.375-inch centers, and terminates along a diagonal line, the upper and shortest cleat being 0.25 × 0.25 inch at the mechanism side and about 4 feet

long. The table is equipped with 46 cleats of the above varying length and taper.

When required by the conditions of the ore, the cleats are varied in dimensions. The usual limits of variation are from the size mentioned for the lower one, ½ inch high × ¼ inch wide, down to 0.25 inch high by 0.25 inch wide, getting proportionately thinner as they clear the feed side of the table, where the upper riffle cleat is 0.25 inch high by 0.25 inch wide.

Where tapered riffle cleats are tacked upon the plane surface of the linoleum, the cleaning plane is no longer in the same plane with the cleaned ore plane, but makes a slight angle with it. Virtually a valley exists between these two planes. This valley results in narrowing the fan of concentrates and deepening the bank of sand. But the nearer one can get to having the treatment of the pulp one grain deep on the riffle cleats, the more perfectly will the grains be treated, each according to its own law. On the small 7-foot table used for experimental purposes this banking sometimes becomes so great as to seriously impede good work, while this difficulty is so small on the full-sized table as to be nearly insignificant. When a 3-mineral separation is to be made, such as quartz, sphalerite, and galena, a table where the cleaning plane and the cleaned-ore plane are one and the same will be found to give better satisfaction.

§ 1216. *Elevator.* — The middling product passes through a 10-inch slot (1) (see Fig. 735) into a launder (2) (see Fig. 736) conveying it to the sand wheel (3) (see Fig. 733), which elevates it and brings it back to the table with the feed. The middlings are returned to the table for two purposes, in part to treat again a portion of the ore which is too rich for tailings and too poor for concentrates; in part also, it is claimed, to equalize the work of the table when the feed is irregular by keeping a bank of sand always present to prevent the concentrates from being washed off. The tailings are discharged back of the middlings on the tailings side.

§ 1217. *"Setting up" and "Leveling up" Wilfley Tables.* — When possible Wilfley tables should be set on Portland cement foundations, care being taken to set the rockers in a truly horizontal plane. When set level on an immutable foundation, the deck may be readily kept in the plane found by experiment best suited for the ore treated. If not set on immovable foundations, or in buildings, they should be "leveled up" periodically, as the distributing influence of several tables reciprocating 240 times a minute is very effective in settling the foundation under the table legs.

To "level up" a table, suspend the deck 18 inches or so above the rockers. This can be done conveniently with a small block and tackle. By the use of a spirit level, "level up" the upper ends of the rockers when standing vertically. Adjust the legs by putting shims under them, until the four rockers level up true. When true, drop the deck home on the rockers. Then elevate the concentrates side as much as desired by lifting the two rockers on the concentrates side, using the set screws under the dies on which the rockers stand. A Wilfley table cannot be properly "leveled up" by adjusting one or two rockers. The rockers should be lowered, the tilting beams placed "at home" horizontally, and the legs, supporting the foundation sill, shimmed so that the rockers are level.

§ 1218. *Feed.* — The pulp is fed through a perforated feed-box 4 feet long, which distributes the pulp just above the upper riffle. The wash water is distributed along the remaining length of the feed side. A perforated launder is preferred to a perforated pipe for this purpose, since it is easily cleaned from leaves and twigs. Both of these distributors are attached to the table deck and move with it. The concentrates edge-water is brought on by a small perforated launder or by a spray pipe, and serves to prevent the concentrates from

drying and floating off. They are discharged from the concentrates side into a receiving box.

§ 1219. *Capacity.* — The speed at which the ore advances, and hence the capacity, depends on the length of the stroke, the speed of the shaft, the elevation or depression of the concentrates end, the character of the ore, size of feed, etc. The capacity varies from 10 tons per 24 hours to 30 or 40 tons, with an average of about 20 or 25 tons. The table has a smaller capacity with finer sizes of feed, makes from 240 to 250 throws per minute and weighs complete about 2800 pounds. The quantity of wash water required varies from 5 to 20 gallons per minute, according to the quality and quantity of the pulp.

§ 1220. *Operating Conditions.* — The bed of pulp when stratified on the table top ranges in depth from 1 grain at its margin on the cleaned-ore plane, to a maximum depth of 10 to 20 grains in the riffles at a point from 15 to 30 inches from the tip ends of the riffle cleats.

By reason of having a deep bed where the riffles are deep, two favorable conditions exist: First. A gentle agitation can be maintained between the riffle cleats which opens up the deep bed and gives any grains of value, enmeshed in the upper layers, an opportunity to fall into the lower layers. Second. The upper layers of clean waste can be readily washed away with the tailings without interfering with the progression of the lower layers.

The pulp loses the support of the perpendicular edge of each riffle cleat when it passes beyond the tip end. As soon as this support is lost, the wash water carries the waste and a small part of the concentrates to the next lower riffle, while the balance of the concentrates, completely cleaned, now advance to the plane surface and ride in a bed supported by the diagonally cut-off riffle-cleat tip ends and by the pulp between the tip ends of the riffle cleats.

As the pulp advances along the riffles, which steadily diminish in depth, waste is washed out. This process continues until the bed becomes so shallow near the ends of the riffle cleats that waste cannot longer be washed out without carrying values. This shallow area is the medium of transition from the deep bed of the cleaning plane to the completely cleaned ore of the cleaned-ore plane.

This area of final transition is popularly called the middlings area. The material composing table middlings is a mixed product containing free grains of heavy mineral largely in excess of free grains of waste, while included grains form a negligible quantity. An impression seems to prevail that all of the so-called middlings return repeatedly to the table for re-treatment. Such is not the case. Concentrates constantly come into the middlings area from the deep bed area, while the same quantity of concentrates is constantly passing from the middlings area to the cleaned-ore plane. By this process the material composing the middlings area is undergoing a constant change and but a small part is re-treated.

A regular feed of properly crushed and classified pulp with a constant water supply are conditions precedent to steady table work. One operator reports that the best work was done on his lead-zinc ore when the concentrates side of the table top was set 0.625 inch higher than the opposite side. The table feed was third-compartment material from Harz jig, re-ground and fed as undersize from a 30-mesh screen. The feed assayed about 7.0% in lead and 20.0% in zinc. When operating normally the zinc product from the table ran 59.0% in zinc with less than 2.0% lead. When the elevation of the deck fell to 0.375 inch the lead in the zinc product increased to from 5.0 to 8.0%. Upon setting the elevation of the deck at 0.625 inch again the lead in the zinc product would fall below 2.0%.

§ 1221. INVESTIGATION OF WILFLEY TABLE WORK. — There exists in print

little exact knowledge of the kind of products that are best adapted for feed to this class of tables, and of the principles upon which they act. The author has made an investigation to throw light upon these two points, using a 1-plane Wilfley table. Some authorities [4] claim that the table does its best work when treating natural products or "mixed feed." By this phrase is meant products which have been crushed to pass through a limiting sieve, but have had no other preparation. Others claim that the ore fed should be closely sized before it is fed. Still a third group of authorities claims that the ore before being fed to a Wilfley table should be classified by a hydraulic classifier.

§ 1222. *Division of Products.* — The usual division of products is easily and naturally made, as shown in Fig. 737: *A* being concentrates; *B*, middlings;

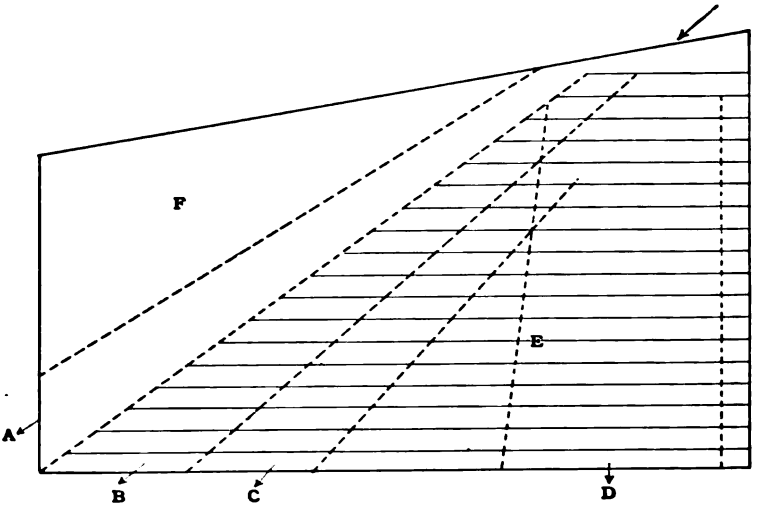

FIG. 737. — USUAL DIVISION OF PRODUCTS ON A WILFLEY TABLE.

C, tailings; and *D*, slimes. Of these, when natural products are fed, the concentrates *A* are nearly clean, heavy mineral, a slight contamination of small grains of quartz being present. The middlings *B* carry some large grains and also some small grains of heavy mineral. The tailings *C* carry some very small grains of heavy mineral, and the slimes *D* carry very minute grains of heavy mineral.

The author believed that the small grains of heavy mineral in middlings *B* and tailings *C* were of less diameter than the smallest in the concentrates *A* and of greater diameter than the majority in the slimes *D*, and that they belonged in middlings and tailings from the law of their existence. The re-running of such middlings upon the same table is, therefore, not a wise proceeding, and admissible only as an expedient in small establishments when the quantity of middlings is not sufficient to warrant other provision. So much for the speculation before the investigation was made.

§ 1223. *Testing Material.* — The materials for this test were pure white massive quartz for the light mineral, and crystalline galena, nearly free from blende and other impurities, from Joplin, Missouri, for the heavy mineral. The quantities of these impurities were so small as to have little effect on the results. Both minerals were broken down to 2-millimeter size, and mixed so as to have approximately 10% of galena and 90% of quartz.

§ 1224. *Description of Table Used in Test.* — The Wilfley table used for the tests had a net working surface of 2 × 4 feet. This is the table that has been found very satisfactory for students' work at the Massachusetts Institute of Technology.

As, in this case, the riffle grooves are cut into the wooden table top, the cleaning plane and the cleaned-ore plane are one and the same with no valley between them. By observing this precaution it is believed that this little table is able to do as good work as the full-sized table.

Comparing the little table with the full-sized table as to areas and capacity, assuming that their capacities are proportional to their areas, we have Table 513.

TABLE 513. — AREA AND CAPACITY OF SMALL AND LARGE WILFLEY TABLES.

Little Table.	Large Table.
Area, 8 square feet.	112 square feet.
Feed, 1 kilogram per minute.	22 tons per 24 hours.
Feed, 0.75 " " "	16.6 " " " "
Feed, 0.5 " " "	11 " " " "

These figures represent the usual range in practice. Seventeen runs in all were made on this material to investigate the effects of the three different kinds of feed.

§ 1225. *Natural Feed.* — Runs Nos. 1 to 5, inclusive, were made upon natural products, the several feed products being 2 millimeters to 0; 1 millimeter to 0; 0.5 millimeter to 0; 0.25 millimeter to 0; and 2 millimeters to 0. Run No. 5, although fed with the same size as No. 1, was fed at a different rate. In making these runs no effort was made to re-run the middlings; first, because the concentrates and tailings would both have been contaminated and would not have shown as well; second, because the middlings themselves would have undergone a change in composition. In consequence of this ruling, the quantities of middlings appear abnormally large. The results of these runs appear in Table 514 (see page 1472).

In these runs the dividing line between concentrates and middlings was chosen so as to make concentrates nearly clean to the eye. The dividing line between middlings and tailings was chosen so as to keep all the large grains of heavy mineral out of the tailings.

The four products — concentrates, middlings, tailings, and slimes — were sized on a series of sieves and the quartz in them determined by dissolving out the galena with hot concentrated hydrochloric acid. The galena was determined by differences. As all of the runs exhibited the same general characteristics it has seemed unnecessary to give the complete results in the case of each run. The results of the sizing-assay test of the four products obtained in run 1 will be found in Table 515.

TABLE 514. — SUMMARY OF RESULTS OF RUNS NOS. 1 TO 17.

No. of Run.	Size.	Rate of Feeding. Kg. per Min.	Rate of Feeding. Tons per 24 hrs. to 36" Table	Composition of the Feed. Quartz.	Composition of the Feed. Galena.	Percentage of the Products. Concentrates.	Mid dlings.	Tail ings.	Slimes.	Composition of Products. Concentrates. Quartz.	Concentrates. Galena.	Middlings. Quartz.	Middlings. Galena.	Tailings. Quartz.	Tailings. Galena.	Slimes. Quartz.	Slimes. Galena.	Percent of Total Galena. Concentrates.	Mid dlings.	Tail ings.	Slimes.	Total Quantity Actually Fed.
	mm.			Per Ct.	Per Ct.	Per Ct.	Per Ct.	Per Ct.	Per Ct.	Per Ct.	Per Ct.	Per Ct.	Per Ct.	Per Ct.	Per Ct.	Per Ct.	Per Ct.	Per Ct.	Per Ct.	Per Ct.	Per Ct.	Kg.
1	2 to 0	1	22	90.91	9.09	4.11	21.48	72.87	1.54	9.92	90.08	76.42	23.58	99.49	0.51	81.10	18.90	39.20	53.34	3.82	3.64	11
2	1 to 0	1	22	90.91	9.09	2.97	20.75	72.91	3.37	8.50	91.50	73.37	26.63	99.39	0.61	90.29	9.71	34.58	57.34	4.72	3.36	11
3	0.5 to 0	0.5	11	90.91	9.09	4.67	25.98	62.81	6.54	2.10	97.60	84.10	15.90	99.10	0.90	87.82	12.18	44.86	41.98	5.44	7.72	11
4	0.25 to 0	0.5	11	90.91	9.09	5.34	21.03	60.49	13.14	2.27	97.73	87.16	12.84	98.39	1.61	90.04	9.96	51.48	27.59	8.20	12.73	11
5	2 to 0	0.5	11	90.91	9.09	2.80	45.67	50.30	1.23	4.66	95.34	86.29	13.71	99.71	0.29	85.38	14.62	29.06	67.70	1.62	1.53	9.03
6	2 to 1.4	1	22	92.60	7.40	6.54	1.65	91.81	.....	0.77	99.23	40.33	59.67	99.96	0.04	.....	.....	87.43	12.05	0.52	.....	12.08
7	1.4 to 1	0.75	16.6	89.08	10.92	9.73	1.90	88.37	.....	0.77	99.23	76.90	23.10	100.00	0.00	.....	.....	96.43	3.57	0.00	.....	6.74
8	1 to 0.75	0.5	11	87.32	12.68	12.06	1.69	86.25	.....	0.99	99.01	83.00	17.00	99.91	0.09	.....	.....	97.62	1.80	0.58	.....	4.03
9	0.75 to 0.5	0.5	11	87.15	12.85	13.15	1.60	85.25	.....	2.50	97.50	77.40	22.60	99.65	0.35	.....	.....	96.58	2.29	1.13	.....	2.845
10	0.5 to 0.36	0.5	11	85.92	14.08	12.18	5.31	82.51	.....	0.69	99.31	80.03	19.97	99.76	0.24	.....	.....	90.57	7.95	1.48	.....	1.72
11	0.36 to 0.28	0.5	11	85.70	14.30	15.10	3.17	81.73	.....	2.14	97.86	84.67	15.35	99.56	0.44	.....	.....	94.60	3.10	2.30	.....	1.59
	Classifier.																					
12	1st spigot	0.5	11	49.82	50.18	49.65	5.53	44.82	.....	0.74	99.26	86.15	13.85	99.71	0.29	.....	.....	98.21	1.53	0.26	.....	13.60
13	2d "	0.5	11	95.21	4.79	3.95	1.31	94.74	.....	1.38	98.62	66.05	33.95	99.64	0.36	.....	.....	81.35	10.72	7.93	.....	14.197
14	3 and 4 "	0.75	16.6	96.23	3.77	3.40	0.66	95.94	.....	1.15	98.85	65.57	34.43	99.80	0.20	.....	.....	88.95	5.98	5.07	.....	14.629
15	5 and 6 "	0.5	11	94.39	5.61	4.94	0.83	94.23	.....	1.65	98.35	71.10	28.90	99.45	0.55	.....	.....	86.66	4.29	9.05	.....	3.745
16	7, 8, 9 "	0.5	11	93.74	6.26	5.72	1.04	94.23	.....	1.16	98.84	83.75	16.25	99.54	0.46	.....	.....	90.58	2.90	6.52	.....	2.28
17	10, 11, 12 "	0.5	11	93.73	6.27	4.98	4.26	90.76	.....	0.38	99.62	83.72	16.28	99.34	0.66	.....	.....	79.38	10.69	9.93	.....	1.9

TABLE 515. — COMPLETE SIZING-ASSAY TEST OF WILFLEY RUN ON NATURAL FEED PRODUCT. RUN 1.

Size in Millimeters.		Concentrates.			Middlings.			Tailings.			Slimes.		
		Weight Tons.	Assay Percent.		Weight Tons.	Assay Percent.		Weight Tons.	Assay Percent.		Weight Tons.	Assay Percent.	
Through.	On.		Galena.	Quartz.		Galena.	Quartz.		Galena.	Quartz.		Galena.	Quartz.
.....	2.06	0.017	100.00	0.00	0.132	73.47	26.53	3.777	0.40	99.60	.....	.....	.....
2.06	1.63	0.059	99.77	0.23	0.795	75.39	24.61	14.713	0.40	99.60	.....	.....	.....
1.63	1.44	0.066	99.80	0.20	0.783	69.47	30.53	11.145	0.50	99.50	.....	.....	.....
1.44	1.27	0.112	99.88	0.12	1.202	62.80	37.20	8.085	0.20	99.80	.....	.....	.....
1.27	1.10	0.084	99.76	0.24	0.954	54.75	45.25	6.174	0.01	99.99	.....	.....	.....
1.10	0.97	0.120	99.43	0.57	1.056	43.80	56.20	7.322	0.02	99.98	.....	.....	.....
0.97	0.84	0.174	98.42	1.58	1.552	31.40	68.60	5.191	0.00	100.00	.....	.....	.....
0.84	0.68	0.206	96.54	3.46	2.021	20.10	79.90	3.350	0.00	100.00	.....	.....	.....
0.68	0.57	0.245	94.47	5.53	1.865	16.70	83.30	2.078	0.00	100.00	.....	.....	.....
0.57	0.45	0.506	91.05	8.95	3.112	11.30	88.70	2.501	0.00	100.00	.....	.....	.....
0.45	0.36	0.402	83.81	16.19	2.326	8.11	91.89	1.581	0.08	99.92	0.156	0.00	100.00
0.36	0.28	0.445	81.24	18.76	2.526	6.44	93.56	1.056	0.12	99.88	0.047	10.20	89.80
0.28	0.24	0.306	81.01	18.99	0.848	4.92	95.08	0.523	0.69	99.31	0.036	10.00	90.00
0.24	0.20	0.375	84.39	15.61	1.230	3.68	96.32	0.633	1.24	98.76	0.053	10.81	89.19
0.20	0.15	0.307	89.48	10.52	0.648	4.44	95.56	0.739	1.45	98.55	0.063	12.58	87.42
0.15	0.12	0.209	95.08	4.92	0.207	6.65	93.35	1.139	1.82	98.18	0.052	19.00	81.00
0.12	0.10	0.110	95.08	4.92	0.075	7.26	92.74	0.624	2.88	97.12	0.068	24.28	75.72
0.10	0.08	0.189	97.74	2.26	0.061	32.23	67.77	0.948	3.43	96.57	0.134	27.04	72.96
0.08	0.00	0.182	99.45	0.55	0.093	90.46	9.54	1.277	7.50	82.50	0.935	28.31	71.69
Total Tons		4.114	90.08	9.92	21.486	23.58	76.42	72.856	0.51	99.49	1.544	18.90	81.10

§ 1226. *Sized Feed.* — Runs Nos. 6 to 11, inclusive, were all upon sized products; the various feed products being through 2 on 1.4 millimeters, through 1.4 on 1.0 millimeter, through 1.0 on 0.75 millimeter, through 0.75 on 0.50 millimeter, through 0.50 on 0.36 millimeter, and through 0.36 on 0.28 millimeter. Here an affort was made to make both concentrates and tailings as clean as possible and the middlings were re-run until they could not be further reduced without endangering either the concentrates or the tailings. For the results obtained in these runs see Table 514.

§ 1227. *Classified Feed.* — Runs Nos. 12 to 17, inclusive, were made upon sorted or classified products. The classifier used was a 12-spigot free-settling classifier operating with closed spigots, *i.e.*, the spigots discharged sand into 2-gallon bottles as fast as it came, but discharged no water. The sorting columns were of 0.5-inch pipe squared at the top and 3 inches long. Expressed in millimeters per second the rising currents in the successive sorting columns were 105, 85, 69, 55, 45, 36, 29, 23, 19, 15, 12, and 10 respectively. Instead of running each spigot separately, six runs were made with products as follows: 1st spigot; 2d spigot; 3d and 4th together; 5th and 6th together; 7th, 8th, and 9th together; and 10th, 11th, and 12th together. The general details of these six runs will be found in Table 514, and in Table 516 there will be found a complete sizing-assay test of run 13.

TABLE 516. — COMPLETE SIZING-ASSAY TEST OF WILFLEY RUN ON CLASSIFIED FEED. RUN 13.

Size in Millimeters.		Sizing Test of Feed. Percents.			Concentrates.			Middlings.			Tailings.		
					Weight	Assay Percent.		Weight	Assay Percent.		Weight	Assay Percent.	
Through.	On.	Quartz.	Galena.	Middlings.	Tons.	Galena.	Quartz.	Tons.	Galena.	Quartz.	Tons.	Galena.	Quartz.
2.83	2.49	.....	.....	.....	.....	.....	.....	.....	.....	.....	0.043	0.00	100.00
2.49	2.06	1.517	.....	.....	.....	.....	.....	0.001	0.00	100.00	1.336	0.00	100.00
2.06	1.63	20.299	.....	0.006	0.001	100.00	0.00	0.015	8.84	91.16	18.429	0.08	99.92
1.63	1.44	20.805	0.004	0.009	0.001	100.00	0.00	0.026	10.87	89.13	21.674	0.07	99.93
1.44	1.27	19.856	0.003	0.013	0.002	93.10	6.90	0.037	21.33	78.67	20.207	0.48	99.52
1.27	1.10	15.746	0.004	0.016	0.002	91.45	8.55	0.014	28.29	71.71	11.066	0.09	99.91
1.10	0.97	5.161	0.006	0.011	0.002	89.69	10.31	0.018	39.39	60.61	7.877	0.18	99.82
0.97	0.84	5.925	0.037	0.023	0.011	95.63	4.37	0.078	38.92	61.08	7.835	0.18	99.82
0.84	0.68	2.734	0.063	0.017	0.036	96.15	3.85	0.120	29.42	70.58	2.676	0.54	99.46
0.68	0.57	1.527	0.147	0.013	0.124	97.49	2.51	0.194	25.14	74.86	2.098	1.16	98.84
0.57	0.45	1.558	0.865	.....	0.730	98.01	1.99	0.494	31.00	69.00	1.122	6.04	93.96
0.45	0.36	0.217	0.678	.....	1.208	98.80	1.20	0.188	47.93	52.07	0.121	16.00	84.00
0.36	0.28	0.107	1.215	.....	0.687	98.24	1.76	0.089	49.53	50.47	0.097	33.05	66.95
0.28	0.24	0.028	0.517	.....	0.384	98.96	1.04	0.014	46.20	53.80	0.038	27.60	72.40
0.24	0.20	0.015	0.414	.....	0.393	99.35	0.65	0.011	52.99	47.01	0.024	19.00	81.00
0.20	0.15	0.009	0.233	.....	0.223	99.58	0.42	0.003	71.90	28.10	0.019	13.32	86.68
0.15	0.12	0.005	0.107	.....	0.084	99.81	0.19	0.002	88.22	11.78	0.014	15.30	84.70
0.12	0.10	0.003	0.025	.....	0.021	99.82	0.18	0.001	92.04	7.96	0.009	40.40	59.60
0.10	0.08	0.005	0.029	.....	0.029	99.83	0.17	0.001	91.95	8.05	0.029	55.55	44.45
0.08	0.00	0.009	0.023	.....	0.012	99.64	0.36	0.001	96.40	3.60	0.029	87.00	13.00
Total	.....	95.526	4.370	0.108	3.950	98.62	1.38	1.307	33.95	66.05	94.743	0.36	99.64
Settling ratio ...		4.11											

§ 1228. *Discussion of Results.* — Comparing the 17 runs as to quantity of the products without looking at the quality (see Table 514), it will be noticed at once that the concentrates and tailings in runs Nos. 6 to 11 and Nos. 12 to 17 are very much larger in quantity than these products in runs Nos. 1 to 5, while the middlings are very much smaller.

In Table 515 will be found the complete sizing-assay test of run 1. If we examine the columns marked concentrates we find the coarser and finer sizes to be almost clean galena, while at a point somewhat below the middle the quartz rises to a maximum of 18.99%. In the case of the middlings, we find again the galena giving a very high percentage among the largest and smallest grains and a maximum of quartz in the middle sizes. This is analogous to the composition of the concentrates. In the tailings we note that the galena appears only to a very slight degree until we get down to the smaller sizes, and that then we have figures that rise to an alarming size. Run No. 1 has 17.5% of galena in the finest size. The slimes also have a serious percentage of lead in the finest size.

Commenting upon runs Nos. 6 to 11, Table 514, as compared with runs Nos. 1 to 5, we note immediately that the concentrates all the way through are almost pure galena with scarcely any quartz, and the tailings are almost pure quartz and scarcely any galena. The middlings, as remarked before, are so small in quantity that they affect the runs but little, and when we consider that they can go directly back on to the table in the continuous run, they do not affect the result at all. This set of runs, Nos. 6 to 11, therefore appears to distance runs Nos. 1 to 5 in the competition. There is really no comparison, since runs Nos. 1 to 5 are not in the same class with them.

If, now, we pass to Table 516 and compare the concentrates of run 13 with those of run 1 as given in Table 515, we see that in the case of run 13 the percentage of quartz looks high in the coarser sizes. This would seem a serious disadvantage were it not for the fact that these products which have the high percentages of quartz are so small in quantity that the quartz cuts scarcely any figure in the final percentage of quartz in the concentrates. In the case of the

tailings we have one feature here which does not and cannot appear in sized runs, Nos. 6 to 11, viz., the tailings get richer in galena down to the finer sizes; but when we look at the tonnage we find that there is scarcely any weight of material down in those sizes, and therefore this loss is not serious and does not bring up the percentage of galena in the final tailings to a serious extent.

For a more complete interpretation of what happens in the three groups of runs Fig. 738 has been designed. This is an ideal sketch of what happens at the discharging corner of a Wilfley table. Running from coarse on the lower edge to fine on the upper, *A*, *B*, *C*, *D*, *E*, *F*, *G*, and *H* represent the different sizes of galena. It appears that they arrange themselves approximately accord-

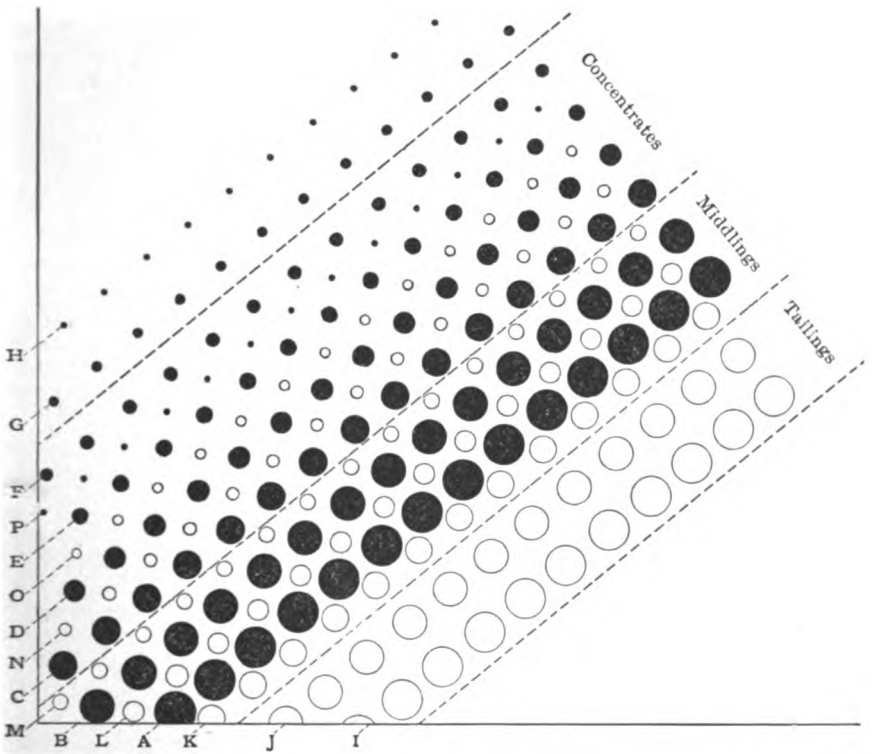

FIG. 738. — IDEAL SKETCH OF THE ARRANGEMENT OF GRAINS BY A WILFLEY TABLE.

ing to this order on the Wilfley table. In like manner, the quartz grains arrange themselves approximately in order of size, beginning at the lower edge with the largest grain and running smaller and smaller upwards, as indicated by the letters *I*, *J*, *K*, *L*, *M*, *N*, *O*, and *P*. The slimes at once take off the galena *H* and the quartz *P*. These finest of all grains have not sufficient weight to hold them up to the upper edge, where mathematical logic would place them. They therefore go into the slimes. The next grade *G* (galena) and *O* (quartz), are not fine enough to go into the slimes nor coarse enough to stand up against the water current in the position shown in the sketch. These grains are found, therefore, sprinkled through the concentrates, middlings, and tailings. See the heaping up of galena in the small sizes in Tables 515 and 516.

Having laid out our argument in this way, it now remains for us to compare by means of this diagram runs Nos. 1 to 5, 6 to 11, and 12 to 17, and to see why it is that runs Nos. 6 to 11 on sized feed and Nos. 12 to 17 on classified feed are so much better than runs Nos. 1 to 5 on natural feed. Runs Nos. 1 to 5 take the products just as they are shown in Fig. 738 and give galena, *C*, *D*, *E*, *F*, in the concentrates contaminated by quartz *N*. See the heaping up of the quartz a little below the middle size in Table 515, and the middlings that give quartz, *K*, *L*, and *M*, contaminated by galena, *A*, *B*, *C*, and *G*. The tailings have in them the quartz, *I*, *J*, and *O*, contaminated by galena *G*. Runs Nos. 6 to 11, on the other hand, have put together on the coarse table, quartz *I* and galena *A*, which have nothing whatever to do with one another, and therefore make almost 100% of galena in the concentrates, and almost 100% of quartz in the tailings. The little accidental middling product, simply being the dividing line between the two products, goes back on the table and disappears. On the second table we treat quartz *J* and galena *B* with the same result. On the third table we treat quartz *K* and galena *C* with the same result; on the fourth table quartz *L* and galena *D*; on the fifth table quartz *M* and galena *E*; on the sixth table quartz *N* and galena *F*. There seems no reason logically why these should not turn out 100% of galena in the concentrates and 100% of quartz in the tailings. The probable reason why we did not obtain those figures was that the accidental flat scales and the fine abrasions of galena went where they should not.

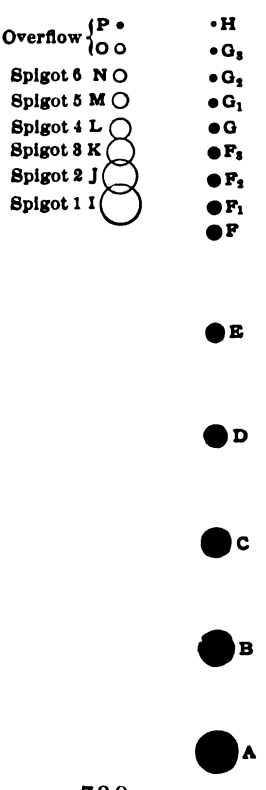

FIG. 739. — IDEAL SKETCH OF CLASSIFIER PRODUCT.

Going to the third set of runs, Nos. 12 to 17, we need to bring in an ideal picture of the products of a classifier by means of Fig. 739. Suppose, for example, that we drop into a tall tube of water grains of quartz ranging from our maximum size down to zero, and grains of galena in the same way, and that these grains are of approximately the same shape, then the rate of settling of these grains may be stated in the following terms: the larger grains of a single mineral will settle faster than the smaller grains; and when we compare the two gravities of quartz and galena, the higher gravity will settle faster than the lower gravity for the same size. So definite is this law that if we look for equal-settling particles, we shall find that the grain of quartz which is equal settling with the grain of galena is about three or four times the diameter of the grain of galena. We may, therefore, construct the ideal diagram (Fig. 739), and we can draw a set of horizontal lines across it, putting the equal-settling grains together, ranging from the heavier grains of the first spigot in the lower part of the diagram up to the lighter grains of the finer spigot at the upper part of the diagram. We see then that spigot 1 contains a large amount of galena, ranging from the coarsest size down to one-quarter the diameter of the coarsest quartz, and that the quartz is almost all in the coarse sizes. This is exactly what we found in our run No. 12.

Spigot 2 has small galena and large quartz, but both are a little smaller than those in spigot 1. Spigot 3, again, has small galena and large quartz, but a little smaller than spigot 2, and so on up the scale with spigot 4, spigot 5, and spigot 6.

Looking at our diagram (Fig. 738) to see what will happen when these several spigots are put upon the table, we shall find that run No. 12 receives galena A, B, C, D, E, F, F_1, and G, and quartz I. Logically these have nothing to do with one another, and therefore should make for perfect separation. Spigot 2 fed in run No. 13 would have quartz J and galena F_2. Spigot 3 would have quartz K and galena F_3, and so on. Spigots 4, 5, and 6 could work their way up, having quartz always larger, and therefore belonging at a lower place on the table, and galena of smaller diameter belonging at a higher place on the table, making for clean separation of concentrates and tailings, with a middlings product that can go directly back on the table and disappear.

In the light of Fig. 738, comparing runs 12 to 17 with runs 6 to 11, we see that the natural lines for quartz and galena are farther apart for the classified products than for the sized products. For example, in run 12 the galena lines A to F average farther from the quartz I than does the galena A of run 6. Again, in run 13 the galena F_2 is farther from quartz J than is the galena B from quartz J in run 7. In like manner we may compare classified runs 14, 15, 16, and 17 with sized runs 8, 9, 10, and 11.

This demonstrates that with perfect classification the work will be better done on the Wilfley table than with sizing, and it also shows that with much middle-weight mineral or included grains a good classifier will probably be more efficient than screens. It must be remembered that in these tests the sized products were prepared under ideal conditions, being dry sized with the greatest care. In the mill, screening wet, the classifier would compare much more favorably with the screens on the sizes which it is best adapted to treat.

§ 1229. *Conclusions.* — 1. The natural product as feed for a Wilfley table is completely outclassed and surpassed by sized-product feed and by classifier-product feed.

2. The sized-product feed, as shown in Table 514, appears to have succeeded better on the whole than the classified feed. But if we take into account the remarkable result of No. 12 with its large quantity and favorable percentage, the less favorable figure of runs 13 to 17 would seem to be counterbalanced.

3. We may conclude from these tests that classified feed is as advantageous as sized feed for the Wilfley table, provided the classifier is a thoroughly good one; and in case of much middle-weight mineral it is probably more advantageous.

A further series of 16 runs analagous to those just described has been carried out by the author using quartz and cupriferous pyrite. These tests have amply confirmed the results of the first series of tests and demonstrate fully that when dealing with middle-weight minerals the classifier shows up much better than it does when dealing with the heavier minerals such as galena.

§ 1230. *Practical Application of Results.* — The results shown by these tests on the Wilfley table are borne out in mill practice. In brief, mills treating a natural product or mixed feed on a Wilfley table will always get two things: (1) middlings which contain large grains of concentrates and some smaller grains of quartz; (2) tailings which have concentrates in the finest sizes in a quantity too great to be neglected. The first may be fairly well treated in a small one-pocket classifier yielding concentrates in the spigot and a product in the overflow which may be sent back to the table again. The second may be sized on a fine screen, say 80 mesh, which will give an oversize without free mineral and an undersize which can go to a slime vanner giving very clean tailings.

Feeding the table with either sized or classified products is believed by the writer to be far more simple than the above method. The sized products have, as the tests show, produced fine results until the finest sizes are reached, when

the products, from a table fed with such material, come just as indicated above for a natural or mixed feed and may be corrected by the methods already outlined. The classifier also gives products which are a great improvement over the natural feed until the two finest sizes are reached, which are no better than similar sizes from the ordinary mixed feed and they also may be corrected in the same way.

§ 1231. SIZED VERSUS CLASSIFIED FEEDS FOR THE WILFLEY TABLE. — The comparison between screens and classifiers in the preparation of feeds for table work has not yet been worked out in the mills sufficiently to give positive figures. The writer believes, however, that the cost of the wear and tear on screens, the facts that screening is imperfectly done in the finer sizes, and in the finest sizes can hardly be done at all; and also that since the classifier places the grains of mineral and gangue farther apart on the table than does sizing, as already explained, the balance stands in favor of the classifier. In making this statement he is fully aware that his own interest in classifiers may bias his opinion and he tries to hold himself open to conviction.

§ 1232. *Proper Treatment of Classified Products.* — The inverted pulsator classifier, used in connection with Harz jigs and Wilfley tables, when fed with 2.5-millimeter material, will deliver 7 or 6 products according to whether or not the small end spigot is used. In case it is used, spigots 7, 6, and 5 will make products which, when treated on Harz jigs, deliver tailings having no free mineral. Spigots 4 and 3 will make products which, when treated on Wilfley tables, deliver tailings having no free mineral. The finest products, or those from spigots 2 and 1, when treated on Wilfley tables, make slimes which must be cleaned by further treatment on a slime vanner, and tailings which should be sent to a fine sizing screen, say 80 mesh, giving oversize which goes to waste and undersize which must be handled on a sand vanner.

§ 1233. WILFLEY TABLE AS A SLIMER. — One feature of the Wilfley table to which especial attention should be called is its ability to separate sands from slimes while making the ordinary concentration. This separation is more complete and thorough than can be made by any classifier and should be taken advantage of in designing mills. By making this provision one can treat the slimes on slime vanners, and the sands on sand vanners, and thus bring each up to the greatest pitch of perfection that can be hoped for. If, on the other hand, as is often done, mixed sands and slimes are sent together to the vanners, the adjustment of the vanners is greatly hampered. In this case the millman does one of three things: he may adjust to save the coarser values at the sacrifice of the finer, he may adjust for slimes at the cost of the sands, or he may try to strike a compromise between the two. None of these three schemes works to the same degree of advantage as is obtained by the separate treatment above indicated. An extremely interesting and instructive adaptation of this has been put in practice in Mill 174, treating an Arizona copper-sulphide ore, where Nichols has placed a cover of cotton duck or canvas on the surface of a wooden-top round table. This table is about 17 feet in diameter with a slope of 1.5 inches to the foot and makes one revolution per minute. By the use of this arrangement the fine free mineral in the sandy tailings of the Wilfley table is saved to a very large extent.

§ 1234. NEW STANDARD CONCENTRATOR.[26] — The table, instead of being supported from below, as are most concentrators of this class, is suspended from a superstructure by means of hooks. The upper ends of these hooks are threaded and, by means of hand wheels, they may be raised or lowered. This is the method used for changing the slope of the table.

To the bottom of the table is attached, by a hinge joint, the pull rod which is connected to the head motion. The head motion consists of an irregular

heart-shaped cam running in contact with a bell crank. The lines of the cam are so drawn that the motion of the table is accelerated and retarded. The end of the pull rod, where it passes through the bell crank, is threaded, and a small hand wheel here permits changing the length of stroke. A tension spring on the other end of the crank permits changing the force with which the table is pulled back against a bumping post. The deck is five-sided, which may be described as being a trapezoid with one of the acute angles replaced by a side. The upper surface is covered with linoleum, the edges being held in place by side cleats.

About two-thirds of this linoleum is covered with riffles which run parallel with the line of bump of the table. Each riffle cleat is divided into five parts and the end of each is beveled. These five parts are set longitudinally end to end, with a space between them. The reason for having these spaces is to prevent the concentrates from traveling the entire length of the table as it is claimed that the concentrates pass upward and through the oblique openings. This increases the effective area of the table and tends toward cleaner work. The middlings product is fed back onto the table by means of a middlings elevator.

The weight is 2,000 pounds.

Capacity is 15 to 20 tons per 24 hours.

Water with feed is the usual amount required for wet crushing.

Wash water used is from 2.5 to 4.0 gallons per minute.

Power used is less than one-half horse-power.

§ 1235. OVERSTROM TABLE.[2] — This table differs from the Wilfley in having a rhomboidal shape which diminishes the idle areas at the corner of the cleaning plane and on the cleaned-ore plane.

When the Overstrom table is made with the tips of the riffle cleats in a diagonal line it belongs with this class, but it is frequently made with the riffle cleats cut off at right angles to the line of jerk, and it then has a cleaned-ore plane along the concentrates side of the table, Under these conditions it belongs in Class *b* where it will be described.

§ 1236. SUTTON, STEELE & STEELE DRY TABLE.[9] — Although this concentrator has a great many attributes which seem to place it in this classification, the author considers the fact that it uses air instead of water as a transporting medium of sufficient weight to preclude its description here. A full description of this table will be found in Chapter XXXIX., under the head of Pneumatic Separators.

§ 1237. PINDER CONCENTRATOR.[31] — The Pinder concentrator, as manufactured by the Joshua Hendy Iron Works Company,[24] is shown in Fig. 740. The base of the machine consists of the heavy timbers *A* firmly held together with tie rods *B*. A center bearing, bolted to the timber framing, carries an upright center shaft *D* which is 2.5 inches in diameter and about which the table moves. Six rocker arms *G* act as bearings on which the outer edge of the pan rests and are so arranged as to distribute evenly the strain between them. Attached to each arm is a spring *H* which takes up lost motion and prevents vibration, while an adjusting spring hook serves to alter the tension of this spring. On one end of the frame rests the head motion *C* which is a toggle mechanism with a return spring producing the jerking motion, the amount of throw being adjustable to meet the requirements of any particular class of ore. The slope of the table can be changed while in operation by means of hand wheel *F* which raises or lowers the center about the shaft *D*.

The pan *E* is constructed in such a manner as to make it flexible, the bottom being made of a series of wedge-shaped, seasoned, redwood staves, each 0.75 inch thick, with a slight clearance between them. These staves radiate from the center, the inner or smaller end of each being bolted to the top of the rim

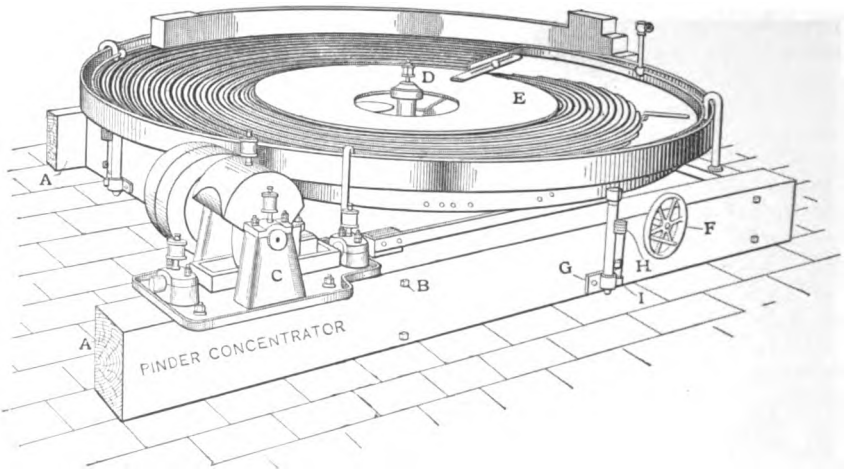

FIG. 740. — PINDER CONCENTRATOR.

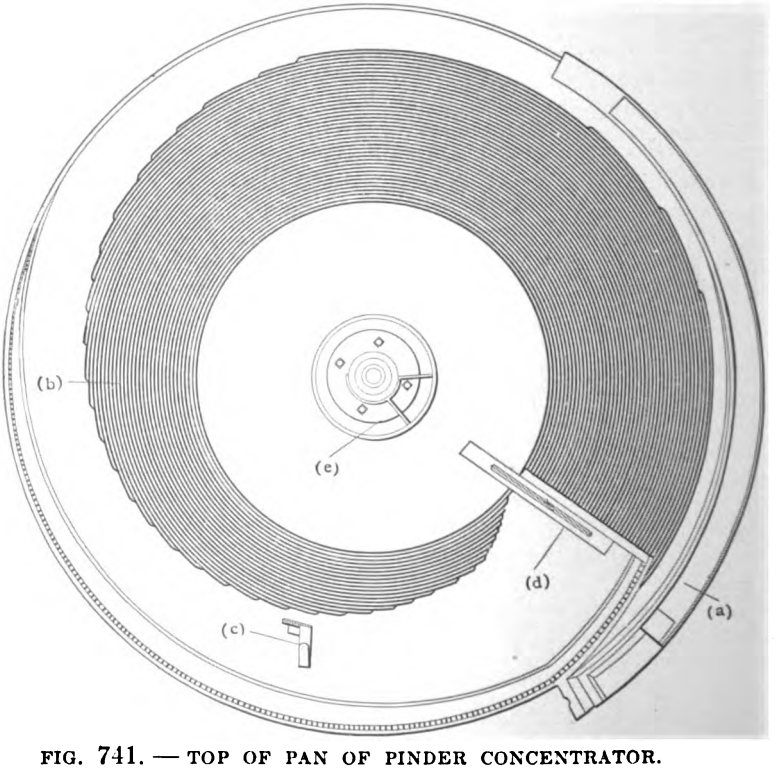

FIG. 741. — TOP OF PAN OF PINDER CONCENTRATOR.

of the tailings bowl, while the outer and wider ends are bolted to the top of a steel rim or band which forms the base construction of the pan.

The widest part of the table is 6 inches wider than the narrowest part, and at this point (see Fig. 741), the feed box *a* is attached. Wash water is delivered in a spray about the margin.

The surface of the pan is covered with linoleum on which are secured tapering copper riffle cleats *b*, 0.75 inch apart and so arranged as to radiate spirally upon the surface of the table, being nearer the center at their commencement and farther from the center at their termination. They are made of different heights according to the nature of the material to be concentrated. Generally they begin with a height of about 0.25 inch and gradually decrease until they terminate in feather edges, the line formed by the terminations being a spiral with a clear smooth space between it and the rim of the pan, thus giving a cleaned-ore plane as well as a cleaning plane.

The pulp is fed to *a*. Since the table is concave the tailings are washed over the riffles to the center where they are discharged; while the concentrates, held back by the riffles, are jerked around and discharged at the ends of the riffles. When the table is running, the centrifugal force acting on the particles is sufficient to force the heavy concentrates toward the outer edge of the table while the riffles assist in this work. There are three discharge openings on the table, one for concentrates *c*, one for middlings *d*, and one for tailings *e*. Opening *d* has a sliding adjustment so that any desired product may be cut out.

One of these tables, run for two years by the Union Mining Company of Portland, Oregon, gave very satisfactory results without requiring a cent for repairs. This company is to enlarge their mill and will install Pinder concentrators.

At the Tarasca Gold Mining Company, of Torres, Sonora, Mexico, three Pinder concentrators use one miner's inch of water from a tank 20 feet above the table. The three tables treat 20 tons each of silver ore per 10 hours. The feed is stamped through a 30-mesh screen. The cost of running the three tables is labor, $2.50 a day; oil, 50 cents; and a cask of water the cost of which is not given. This makes $3.00 Mexican money without figuring in the cost of the water. The tables save 85.0% of the values.

§ 1238. THE DODD BUDDLE.[43] — The Dodd Buddle, shown in Figs. 742*a* and *b*, is a round table which in principle and operation resembles the Wilfley table, and differs from the Pinder table in being convex instead of concave. The table does not revolve but has a peripheral jerking motion imparted to it circumferentially by means of a toggle movement. The table has a very gentle slope from center to periphery, and the riffles, as shown in the illustration, begin at the feed portion of the table and run in portions of circles around the table, terminating along a line which is a spiral, so that the table is in fact a Wilfley table coiled up. The feed is put on the buddle at *A* by a feed box, and the jerks of the table carry the concentrates around it along the lines of the riffles, while the tailings wash off the edges. As the concentrates arrive at the ends of the riffles they come upon a plane surface exactly analogous to the cleaned-ore plane of a Wilfley table and are washed off into the concentrates tank. The wash-water spray pipes are shown in the figure. Eighteen of these tables were installed at Mill 96,[19] after a competition with other tables and, after two years of service, they are still giving satisfaction.

I. *A b. Tables Using Riffles and Fixing a Diagonal Line by Some Other Means than Ending the Riffle Cleats or Grooves on that Line.*

§ 1239. CARD CONCENTRATOR.[34] — The Card table has two planes, the flexible joint between them dividing the deck into two nearly equal triangles and

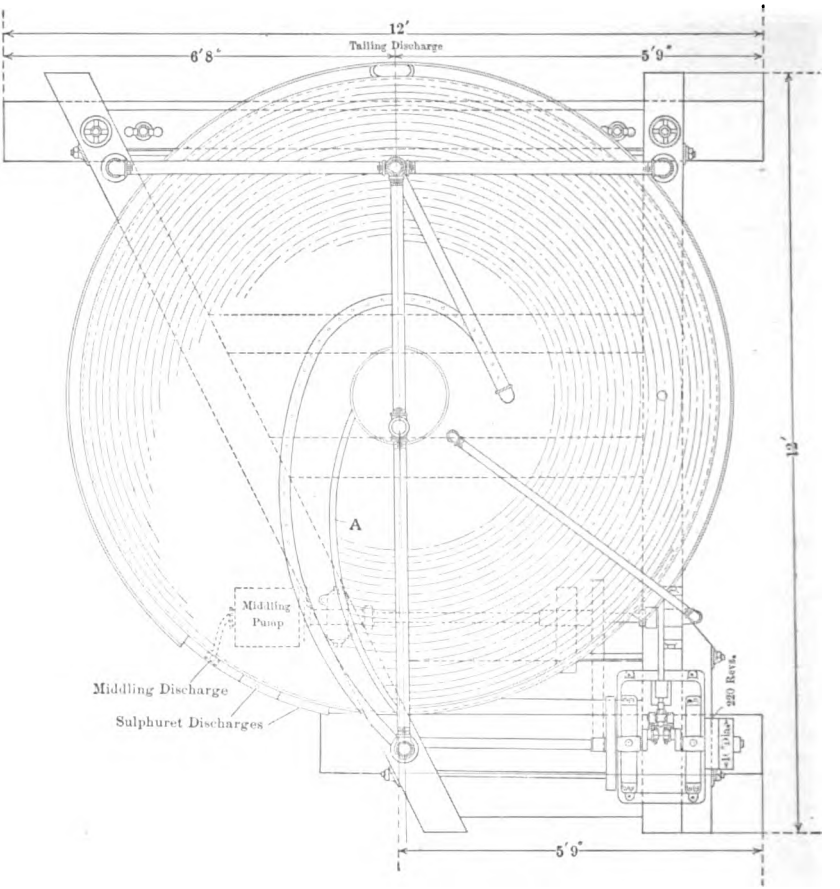

FIG. 742*a*. — DODD BUDDLE. PLAN.

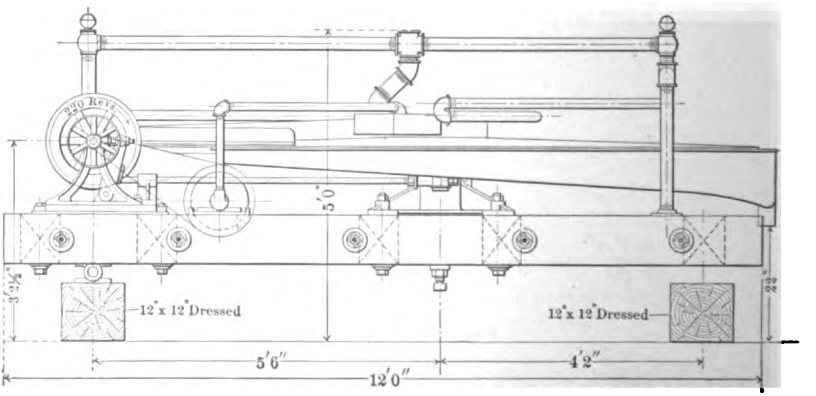

FIG. 742*b*. — ELEVATION.

forming a diagonal line along which the concentrates and tailings part company. That portion of the table over which the concentrates are discharged can be tilted at slightly different angles from the rest of the table, and thus, with the aid of the table motion, the concentrates are obliged to climb a slight

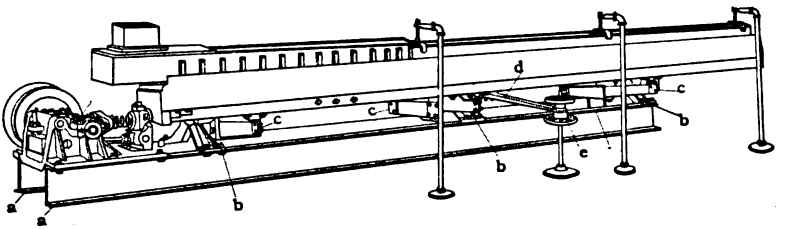

FIG. 743. — CARD TABLE. ELEVATION.

incline along the riffles before being discharged. This makes for cleaner concentrates, while the fact that the riffle grooves extend from end to end over the whole deck makes for a higher extraction. Fig. 745 shows the diagonal line and the method of riffling. As will be observed, the riffle grooves are wider and deeper along the diagonal line than they are at either side of the table.

The sub-frame consists of two I-beams *a* (see Fig. 743), which are stiffened and held together by the plate supporting the head motion *f* and the three iron supports *b*; the latter being used as bearings in which a horizontal rod, extending for nearly the full length of the table, is free to turn, but is prevented from moving longitudinally. Horizontal flat springs *c*, which bend so as to allow a longitudinal motion in a horizontal plane, are securely fastened, by means of lugs, to the long horizontal rod. The ends of these springs are fastened to the table top or deck as shown in the cut. The lever arm *d* is tight on the horizontal rod. The table deck is tilted by means of the two hand wheels *e* acting through the lever arm *d*.

The head motion of the Card table is clearly shown by the diagram, Fig. 744. Since the points *A*, *B*, and *C* are fixed, the pendulum *D* must always maintain the same character and length of stroke. Movement is imparted to the table deck by contact with face *E* of the vibrator *H*, which in turn is oscillated by the draw-bar connection *F* to the pendulum *D*. The length of stroke is changed by raising or lowering the point of connection of the free end of the draw bar on the face of pendulum *D* by means of the adjusting screw *K*. All bearings are babbitted, and all pins are of standard $1\frac{7}{16}$-inch shafting, thus simplifying and facilitating repairs and at the same time reducing the cost of the same. The grease-cup method of lubricating the bearings is employed.

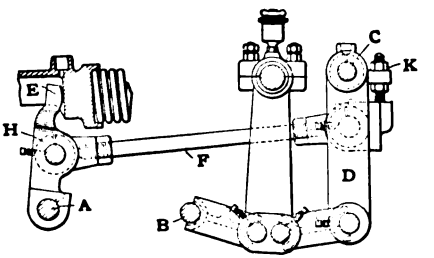

FIG. 744. — CARD TABLE HEAD MOTION.

Connected to the head motion is the table top shown in Fig. 745. This top, 5.5 feet wide by about 14 feet in length, is made of California redwood in the shape of a trapezoid. It reciprocates in one plane only, having no vertical movement as do the tables which are supported on toggle rods. The deck has no linoleum or rubber covering as is general in this class of tables, but is painted with a mixture composed principally of coach varnish and flowered manganese.

This gives a surface upon which water has little or no effect and its wearing qualities are said to be very good.

In place of having riffle cleats the Card table has riffle grooves cut below the surface and running the entire length of the table in a direction parallel to the line of motion. Fig. 746, giving a cross-section detail of these riffles, shows the gently sloping top and the sharply inclined bottom of these grooves.

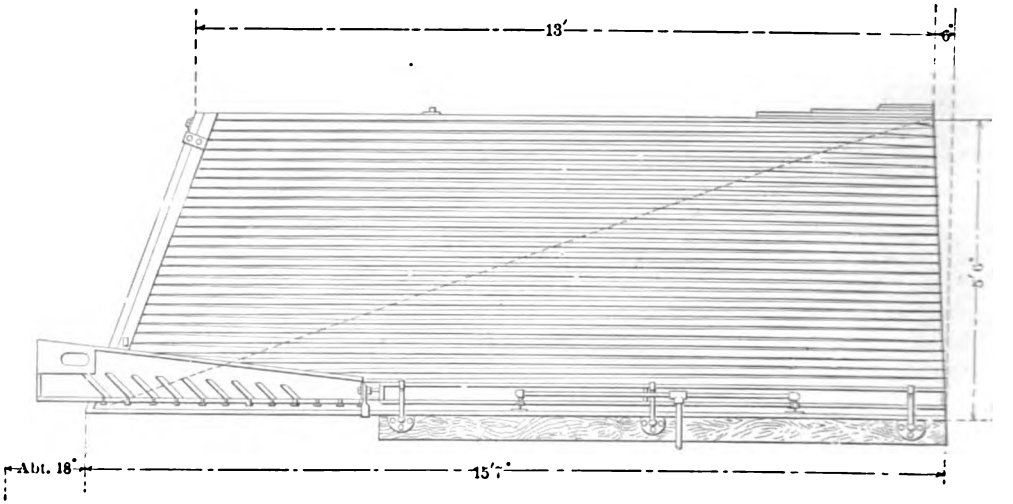

FIG. 745. — DECK OF CARD TABLE.

The reader will observe the similarity of this cross-section with that of a gold-pan, in fact the table acts in a manner similar to a panning operation by allowing the values to stratify and then washing off the waste without disturbing this stratification as must take place when using riffles with a square section (see Fig. 747).

This is one of the more recent concentrators which is finding its way into the mills, and the makers claim many advantages for it. It is said to have a long life with low repair costs, and to handle a wide range of feed effecting a high saving. Only 0.7 horse-power is required to operate it.

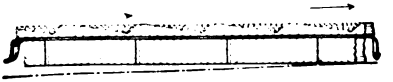

FIG. 746. — SECTION OF CARD TABLE RIFFLES.

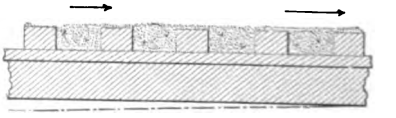

FIG. 747. — SECTION OF SQUARE RIFFLES.

§ 1240. CHRISTENSEN CONCENTRATOR.[11] — The Christensen concentrator has a sharp bump in a direction parallel to the riffles, caused by a cam, spring, and bumping post. It has riffles running the entire length and water flowing over the table across the riffles. It brings about the diagonal line by having the table built permanently in bent form, the angle between the two planes being the diagonal. By means of the bump, the concentrates are impelled up on these riffles against small individual streams of wash water coming down on them.

The table top is rectangular in shape and has riffle cleats running the entire length of it.[29] These taper to nothing at the concentrates side. The top of

the table does not lie in one plane, the discharge end being sprung up by means of hand screws. The elevation given to this end is adjustable. The object of having riffle cleats run the entire length of the table rather than taper off in a diagonal line is to prevent the fine concentrates from being washed over the plane surface by the wash water into the tailings, thus causing loss, and furthermore, because the top riffles collect a large percentage of the concentrates which are discharged quicker than if they were to travel in a diagonal line to the discharge.

Wash water is introduced on the table both at the concentrates side and above the feed side. The wash water introduced at the feed side makes the pulp thin and removes most of the tailings. The water which is fed at the concentrates side flows easily down the riffles which are sprung up, thus causing the concentrates to be washed free of tailings.

This table may be used without water but not so advantageously.

§ 1241. OVERSTROM TABLE.[1] — The Overstrom table is usually made with the ends of the riffle cleats in a line at right angles to the line of reciprocations, the riffles being parallel to the latter line. A diagonal movement of the sand is obtained by a slight inclination of the table deck in connection with the cleaned-ore plane, situated just beyond the tips of the riffle cleats, where the concentrates spread out in a fan-like form arranged according to their size and specific gravity.

The supporting frame (Fig. 748) consists of two 9-inch channel irons *a*,

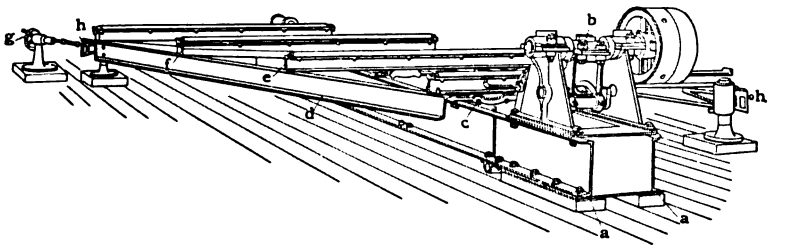

FIG. 748. — TIPPING FRAME OF OVERSTROM TABLE.

extending the entire length of the table. The reciprocating mechanism *b* is securely bolted to the channel irons which are also braced by bolting four pieces of steel plate at intervals along the lower sides, and by the spring seat supports and four cradle seats *c* which are bolted to the upper side of the channel bars. Into these cradle seats fit the cradles, the latter being securely bolted to the tipping frame. The tipping frame is made up of two 5-inch channel bars *d* which are held together by four 3-inch I-beams *e*, extending the entire width of the table and braced with diagonal angle irons. On the upper surfaces of the 3-inch I-beams there are spring-steel roller seats. There are similar roller seats under the table top while hollow-steel rollers *f* fit between the seats and are held in place by fiber blocks at the ends. The rollers are so arranged that they continually present new rolling surfaces which keep the rollers from becoming flat. This frame, located between the supporting frame and the table top, is directly connected to the head motion and is tilted by means of the hand wheel *g* connected to wedges *h*, in diagonal corners, by a rod. As one wedge is advanced the other is withdrawn and in this manner the slope of the table may be varied 6 inches.

A new form of head motion has been adopted and its method of operation may be readily seen by referring to Fig. 749.

The table top, in the shape of a rhomboid, is made of California redwood

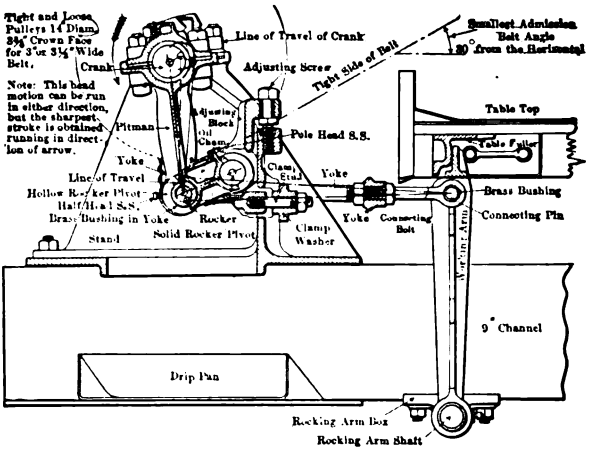

FIG. 749. — HEAD MOTION OF OVERSTROM TABLE.

(see Fig. 750), and is especially designed to avoid working loose in the joints and buckling through compression. The riffle cleats, which are made of angle copper fastened to linoleum, cover about two-thirds of the table top and terminate one foot from the concentrates side. The top riffles are the longest, while the others gradually decrease in length. The long feed box assists in using less wash water. The minimum length of stroke is 0.56 inch and the maximum is 0.94 inch. This action is accomplished without jar or noise. The weight of the table, crated for shipment, is about 2,750 pounds.

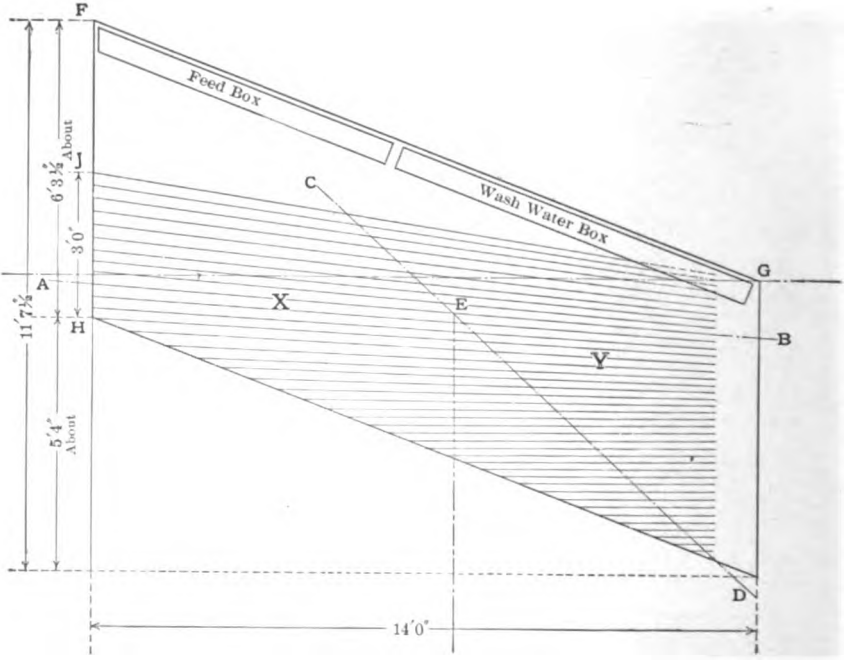

FIG. 750. — OVERSTROM TABLE TOP.

The table has been adopted by a number of mills, and among them by Mill 127, where it was installed after competitive tests with other tables.

§ 1242. THE BARTLETT SIMPLEX CONCENTRATOR. — The original Bartlett table is described in Vol. II., page 678 of Ore Dressing.

The Bartlett Simplex concentrator, as manufactured by the Colorado Iron Works Company, differs from the other tables in having three rubber-covered decks.[13] [14] Each deck has cast-rubber riffles running the entire length of the table which are a compromise between the saw-tooth and the usual type of square riffles. The reciprocations stratify the heavy mineral on the table and at the same time carry it toward the concentrates side, while wash water, flowing transversely to the riffles, carries the tailings over the lower or tailings side of the table (see Fig. 751).

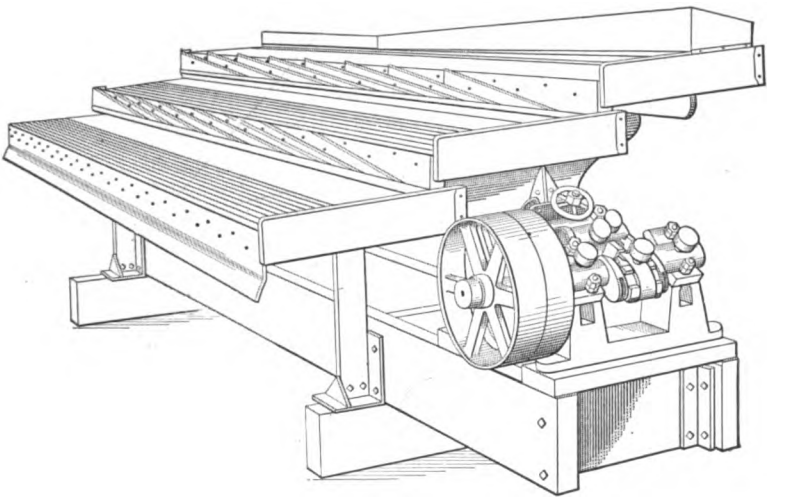

FIG. 751. — THE BARTLETT SIMPLEX CONCENTRATOR.

The diagonal line along which the mineral and gangue part company is, in this case, the resultant of two forces, mechanical jerk and the flow of water modified and aided by the taper of the riffle cleats towards the concentrates end of the table.

The riffle cleats are slightly undercut and the tops are rounded. This combination gives a smooth flow of water across the table which greatly lessens the probability of the fine concentrates being agitated and washed away. Each deck is nearly 11 feet long and 2 feet wide, the total concentrating area being 60 square feet. The feed is delivered to the top deck and the tailings from it are carried back, a distance of 2 feet, and fed to the second deck. This process is repeated on the third and last deck. Each deck is an independent concentrator which can be removed very easily by taking out three hinge bolts. It contains no mortises or tenons, but is held together solely by means of bolts. The table vibrates on four broad hickory strips which give resiliency and quick return.

The frame is held together by tie rods and bolts which permit of quickly taking it apart for muleback transportation. It weighs 1,100 pounds, requires about ¼ horse-power to operate, and the average capacity is about 20 tons in 24 hours.

The makers claim that the table can deliver three grades of concentrates,

each deck being a complete and independent concentrator, and that it will treat ore varying in size from 6 mesh down to the finest slimes.

§ 1243. THE DEISTER CONCENTRATORS.[15] — The angle between the line of termination of the riffles on the Deister tables and the direction of motion is not so acute as on the Wilfley tables. The Deister concentrator is also wider, shorter and has no cleaned-ore plane except on the No. 3 machine.

The concentrator seems to be of simple and solid construction, having all parts easy of access. In Fig. 752 the main frame is composed of two 8-inch channel bars *a*, held together by steel plates *b*. On one end of this frame rests the driving mechanism *c* which is of the rolling-contact type, adjustable both as to differential action and length of stroke. The table is supported on four standards resting in iron bases, the bottom of the table being provided with

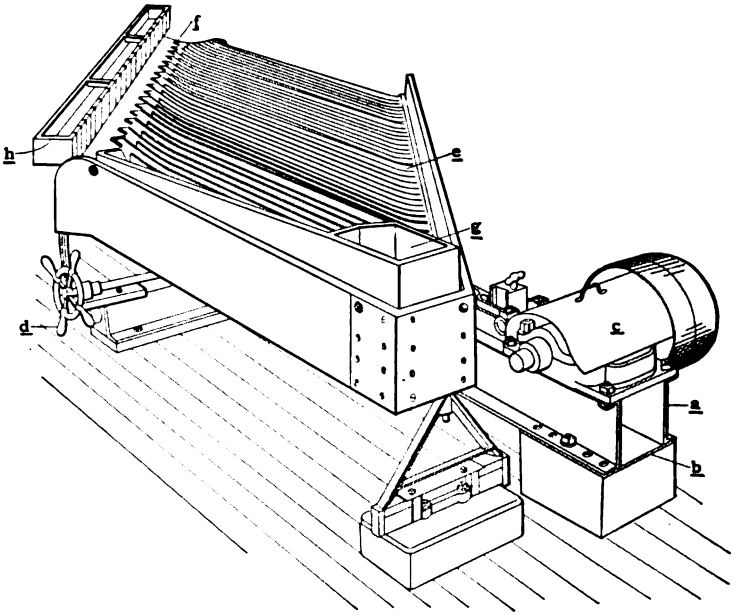

FIG. 752. — THE NO. 2 DEISTER TABLE.

cup bearings into which the vertical standards fit. Two of the standards have threaded adjustment for giving the table the desired initial incline. A hand wheel or lever *d* is connected by rods to wedges under the other two standards and serves to give the required inclination to the separating surface.

The wooden table top, shaped like a rhomboid, is covered with linoleum on which are placed the tapered riffle cleats of copper or wood. The special arrangement of the riffles is one of the important features, the entire surface of the table being covered; except in the case of the Deister slimer or No. 3 concentrator, which is, for the greater part, without riffles, there being a few shallow riffles adjacent to the tailings end. This slimer is divided into two sections each having three different planes. The first section is for the purpose of settling and stratifying the pulp which is then delivered to the second or tailings section for further separation and cleaning. The few riffles used are arranged in a special manner as shown in Fig. 753.

The Nos. 1 and 2 Deister concentrators have alternate riffle cleats extending to that point of the table where the concentrates discharge, while the remainder

do not extend quite so far; thus the whole surface of the table is utilized in concentration. The riffles are arranged in groups (see Fig. 752), each group being separated from the next by a higher riffle cleat *e* which has the effect of flooding the group of riffles above it with a comparatively quiet sheet of water. Tables Nos. 1 and 3 discharge their concentrates over the edge, while No. 2 discharges into small pockets *f*. Since the riffle cleats extend to the discharge points the coarser heavy minerals are all discharged from the first 18 inches of the side, therefore they do not disturb the finer concentrates which are discharged lower down. The concentrates side of the tables is always elevated above the feed side. A feed box *g* distributes the feed, and the water for washing off the concentrates is delivered through the box *h*.

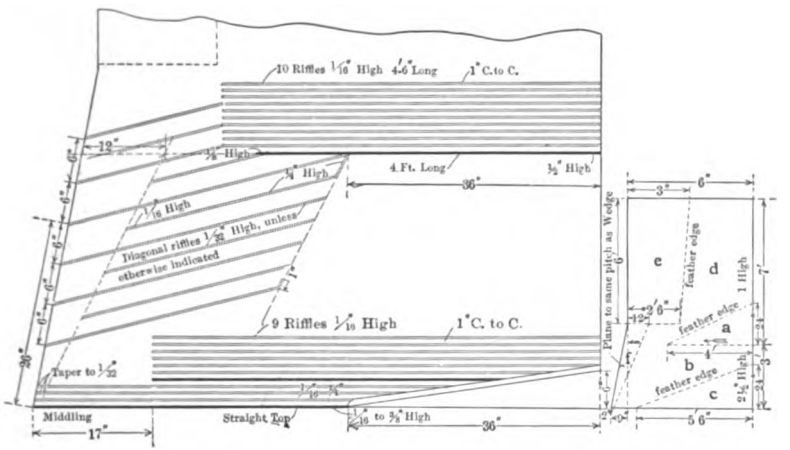

FIG. 753. — RIFFLES ON NO. 3 DEISTER TABLE.

The Deister concentrators are used in Mill 178 where they have reduced the copper content of the tailings 1-10 of 1% over the former concentrators. They also made a higher saving and cleaner concentrates when working on slimes at this mill than was ever obtained with any other table. These tables will be exclusively used in the 2-head extension of Mill 179.[12]

The results of a comparative test made on a Deister No. 3 concentrator and a suspended-type, smooth-belt vanner at Mill 101 are given in Table 517. The feed to both concentrators was from a tube mill, after being thickened in a Callow tank. Very little of the feed was coarser than 200 mesh and the consistency was 22.62% solids.

TABLE 517. — COMPARATIVE RESULTS BETWEEN A DEISTER NO. 3 CONCENTRATOR AND A SUSPENDED VANNER.

	Deister No. 3 Concentrator.		Vanner.	
	Number of Days Run.	Average Results.	Number of Days Run.	Average Results.
Total solids in feed per run in tons	13	33.65	14	39.40
Total solids in feed per 24 hours in tons	13	8.90	14	9.67
Value of feed per ton in ounces*	13	0.988	14	0.958
Total value of feed in ounces	13	32.741	14	38.087
Value of concentrates per ton in ounces	13	15.928	14	17.800
Percent extraction by concentrates	13	41.91	14	32.32
Percent extraction by tailings	13	40.52	14	36.16

* The author supposes that these values are in gold.

§ 1244. THE FERRARIS PATENT TABLE.[30] — The Ferraris patent table lessens the cleaned-ore plane by lengthening the upper riffles. It is being introduced into the mills in two forms,[20] namely: The Fried. Krupp Akt. Ges. Grusonwerk type and the Ferraris type (see Fig. 754). The former is a large rectangular table with a wrought-iron tilting frame and wooden-spring supports hinged for easy adjustments; while the latter is smaller, of trapezoidal form, has no tilting frame, and the wooden-spring supports are rigidly connected above and below. In these the shoes are provided with set screws for occasional adjustment as the treatment of the smaller sizes does not require frequent adjustment.

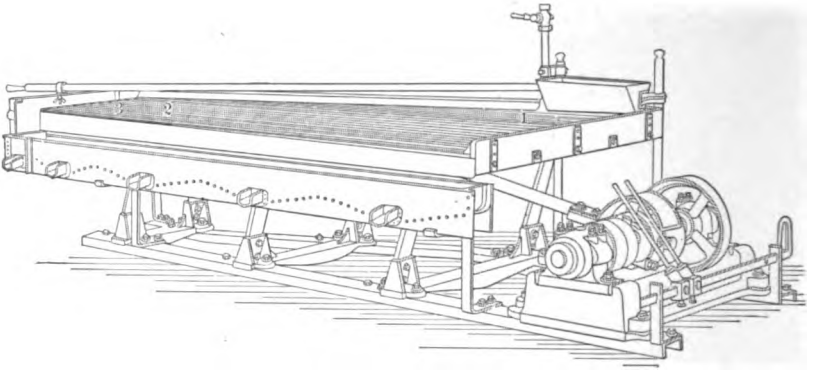

FIG. 754. — THE FERRARIS TABLE.

The head motions consist of two adjustable eccentrics, with a fly-wheel, connected to the tables by flexible rods. The jerking action is due to the combined effect of the eccentrics and the inclined spring supports. The forward upward movement tightens its grasp on the grains, the return downward movement loosens the grasp, the moment of reversal from forward to backward gives the grains a toss forward.

The table top has linoleum with riffle cleats tacked on, or later with grooves cast in the linoleum. A smooth surface (1) lies above the riffle cleats along the whole length of the table and the tapered riffle cleats end in a line (2) at right angles to the direction of motion, leaving a smooth cleaned-ore plane (3) of 2 feet length, more or less, at the concentrates side.

Table 518 furnishes a few additional facts regarding the two tables.

TABLE 518. — SIZES, CAPACITIES, POWER REQUIRED, ETC., FOR FERRARIS TABLES.

	Krupp Type.	Ferraris Type.
Length of table	11 feet 6 inches.	9 feet 2 inches.
Width of table	4 " 11 "	{4 " 5 " {2 " 3 "
Revolutions per minute	340	380
Power	0.50 horse-power.	0.33 horse-power.
Consumption clean water per minute	4.5 to 9 gallons.	2.75 to 3.50 gallons.
Capacity per hour	880 to 1,300 pounds.	440 to 880 pounds.
Weight of table	2,750 pounds.	2,000 pounds.

§ 1245. THE JAMES CONCENTRATOR.[36] — The James concentrator has been very successful in a number of mills. The essential difference between this table and others that have been described is in the construction of the table top or deck shown in Fig. 755.

The table deck is divided into two sections, flexibly joined together on a line oblique to the line of motion of the table. One of these sections is riffled for the coarse material, while the other section is smooth, so as to allow the settling and separation of the fine particles which will not settle on a riffled surface. The fine mineral, which is settled and separated, is discharged at the side of the table behind the coarse gangue; while the coarse mineral, which settles in the riffles, is separated and discharged over the end of the table above the gangue in the usual manner.

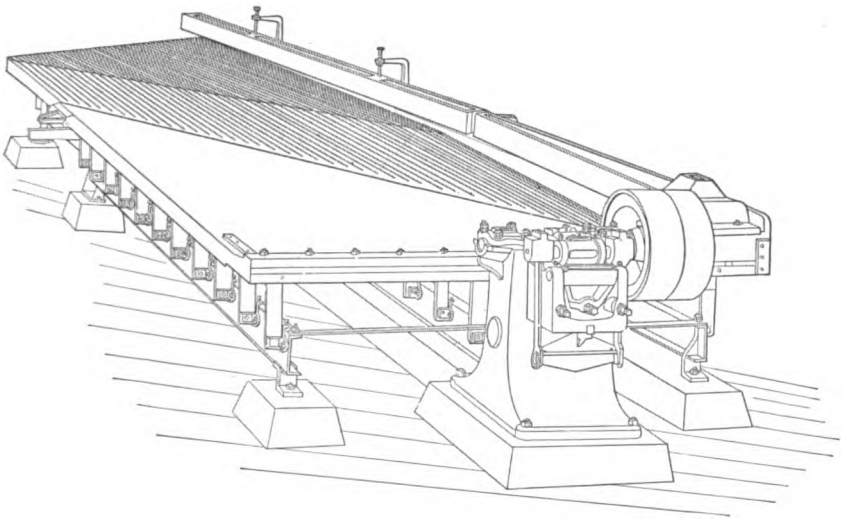

FIG. 755. — THE JAMES TABLE.

The riffled or coarse concentrating portion of the table is provided with a simple adjusting mechanism which allows that portion of the table to be adjusted independently of the smooth portion, and also allows the smooth surface to be set at an inclination best adapted for the saving of the very fine values.

The table supporting frame is of steel construction. From 0.5 to 1 horsepower is required to operate the machine, and from 6 to 9 gallons of wash water per minute are sufficient.

§ 1246. THE JAMES SLIMER.[36] — The James slimer is of the same general construction as the James table described in the previous article, but is designed for handling large quantities of very fine material. The deck is made long and is divided into four working sections, namely, a longitudinal settling section, a stratifying section, and two finishing sections as shown in Fig. 756. The

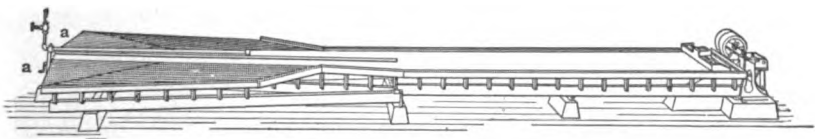

FIG. 756. — THE JAMES SLIMER.

settling section is a smooth linoleum surface 3 feet wide and 18 feet long; the stratifying section is a basin located at the rear end of the settling section and 0.625 inch deep by 7 feet long, gradually increasing in width and depth towards the rear end of said basin.

The bottom of the basin is provided with centrally diverging riffles 0.25 inch deep and 2 inches apart, while the finishing sections, which are hinged to the opposite sides of the stratifying section, are riffled and can both be transversely adjusted by one adjusting screw. When in practical operation, the driving pulley should rotate about 250 revolutions per minute, and the length of the stroke should be 0.56 inch to 0.62 inch according to the class of material being treated. The pulp is delivered into the feed distributor, by which it is equally distributed transversely across the head end of the settling section. The material then flows in a longitudinal direction until it reaches the stratifying section or basin. At this point the slimy water, which has been settled so that it is practically clear on the surface, is equally divided by a partition in the basin, and discharged transversely across the surface of the two finishing sections. The solids, retained in the deep basin, are gradually forced rearward by the reciprocating motion of the table and, at the same time, the particles having the greater specific gravity are shifted to the center of the basin by the diverging riffles.

By this method of operation the mineral values are consolidated and stratified while in a deep basin, practically free from any currents of water; and as the material travels up the inclined end of the stratifying basin, it gradually spreads out on the finishing surface and is washed by the dressing water in the usual manner with but small loss of the fine values. The mineral follows out the line of the riffles and is discharged at *a*, *a* as concentrates, while the gangue is caused to flow transversely across the riffles and is discharged over the side of the table, practically impoverished of its values.

The James slimer has a capacity of about 1 ton per hour and requires from 3 to 6 gallons of wash water per minute. The machine is used and is reported to give excellent satisfaction.

§ 1247. The Luhrig-Buss Concentrating Table.[37] — The Luhrig-Buss table has sills of longitudinal timbers set in a concrete foundation. A tilting frame, with adjusting screws for varying the side slope of the table, rests on the sills. Attached to the tilting frame are twenty steel-spring rods arranged in four rows across the table, each row having five springs, on which the table is placed. These supports lean at an angle towards the driving mechanism and are after the same plan as the supporting toggles invented by Erminio Ferraris and used on his screen and tables.

The driving mechanism consists of a pulley, fly-wheels, and an eccentric which is adjustable for more or less throw. It is located at the side opposite to that where the concentrates are discharged. The movement of the particles is given by the forward upward motion of the table, which grips hold of it, and the backward downward motion which lets go of it. This results in a forward jerking motion analogous to the Wilfley toggle movement. The effect may be changed by varying either the length of the stroke or the inclination of the supporting springs, both being easily made while the table is in motion.

The riffle cleats converge slightly from the mechanism side towards the concentrates side until within 2 or 3 feet of the latter; from this on they all incline slightly downwards to the concentrates side. It is claimed that the forward movement of the mineral is helped by the flow of the water in the upper grooves, while in the lower grooves the mineral has to climb up hill against the water current; in the last 2 or 3 feet the water is flowing with the mineral. Nothing is said as to difficulty arising from having the riffle cleats not parallel with the movement. The table may be used without riffle cleats on classified sand. Water is supplied through an open trough with side spouts.

§ 1248. The McLeod Concentrator.[42] — The McLeod concentrating table,

shown in Fig. 757, has an unusually wide deck with riffles running the entire length. This deck is so designed that every square foot carries material and there is no useless burdening or crowding of the deck with mineral already concentrated and needing only removal.

The riffles extend over the entire deck and are divided into zones by stepping. In this way the middlings zone will contain middlings only, and will direct those middlings so that they will be spilled over the side between two fixed and predetermined points, and there only. The concentrates come off over the entire edge, the uppermost riffles holding the heaviest minerals while the lead, zinc,

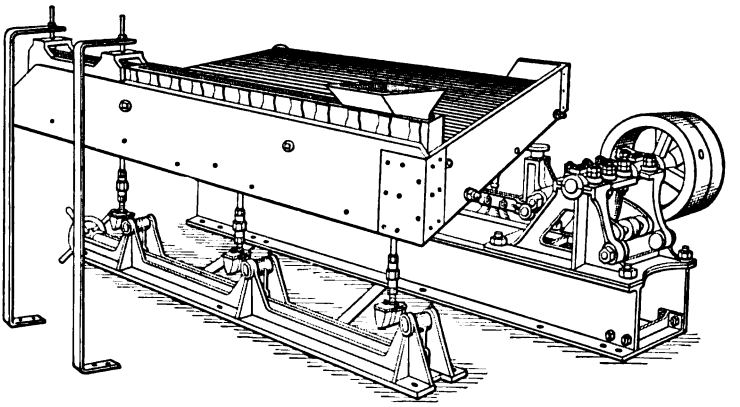

FIG. 757. — THE MCLEOD CONCENTRATOR.

and iron minerals are spread out in distinct broad bands, and may be diverted into separate receptacles. The unusual breadth of these bands permits of a cleanness of separation not secured when riffles do not go to the end of the table.

The other details of the table should be sufficiently clear from the cut and will not be entered into more fully at this point.

Table 519 gives the summary of a long series of tests made at Mill 162, in which the work of the McLeod table was carefully compared with that performed by two other well-known concentrating tables.[21]

TABLE 519. — TESTS COMPARING WORK PERFORMED BY MCLEOD, WILFLEY, AND OVERSTROM TABLES.

Table.	Feed.	Number of Days.	Feed. Percent Copper.	Concentrates. Percent Copper	Tailings. Percent Copper.	Material in Head Water. Percent Copper.	Middlings. Percent Copper.	Percent of Total Copper in Concentrates.	Percent of Total Copper Lost in Tailings.	Percent Copper in Head Water.	Percent Total Copper in Middlings	Capacity in Tons per 24 Hours.
McLeod....	Coarse.	4	2.66	12.25	0.34	1.64	1.64	79.90	7.35	8.21	4.66	11.040
Wilfley.....	"	11	2.65	10.00	0.83	1.79	4.41	57.70	21.31	4.38	14.77	12.068
Overstrom..	"	11	2.64	12.65	0.62	1.71	4.69	58.20	16.65	6.65	8.20	11.672
McLeod....	Fine high quantity.	7	3.10	13.14	0.63	2.26	1.50	51.56	6.36	31.09	5.11	11.062
Wilfley.....	" " "	4	3.90	13.58	1.29	2.68	2.99	49.90	10.71	27.12	8.40	12.403
Overstrom..	" " "	6	4.01	16.03	0.89	2.58	5.45	55.40	8.11	27.78	5.33	13.265
Wilfley.....	Fine low quantity.	5	3.17	12.23	0.67	2.13	2.29	63.50	8.98	16.48	11.28	7.852
Overstrom..	" " "	6	3.00	14.58	0.65	2.32	5.31	66.90	11.40	19.16	7.87	7.214

§ 1249. THE NEW HUMBOLDT CONCENTRATOR. — The New Humboldt concentrator, "Schuttelherd," made by the Humboldt Engineering Works Company [35] possesses certain features which distinguish it from other tables of the

Wilfley type. The table top, an oblique parallelogram, has peculiarly-shaped riffle cleats running the entire length of the table in a direction parallel to the line of reciprocations and tapering thin towards the concentrates side. The table is supported on a tilting frame by roller bearings (2) (see Fig. 758), and slopes downward from the feed towards the tailings side. The amount of tilt is varied by means of a lever (1) at the concentrates side. Since the table is guided by means of wedge-shaped carriers resting at the upper longitudinal edge of the table on rollers, the forward stroke of the table causes its feed side to rise, while the backward stroke causes it to fall the same amount. The table therefore receives not only a longitudinal movement, but at the same time a tranverse inclination.

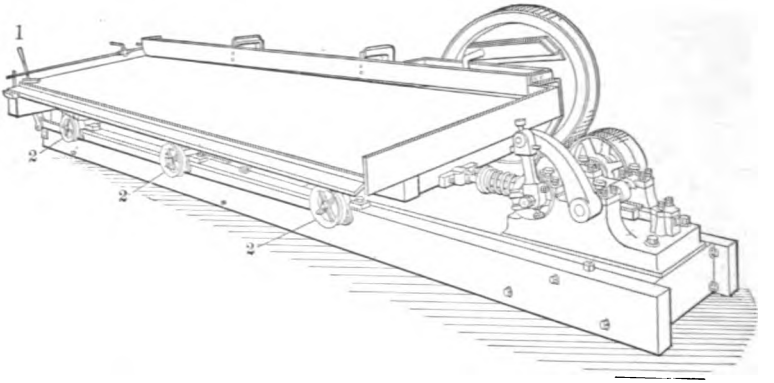

FIG. 758. — THE NEW HUMBOLDT CONCENTRATOR.

This double-shaking movement is imparted to the table by means of a suitable head motion, an adaptation of the crank-arm movement used on jigs (see Vol. I., p. 535), located at the side opposite to the concentrates side and giving a quick forward stroke with a sudden change at the end to a slow return stroke of the table. At the same time the table is lifted suddenly with each stroke, as already described, at the feed side, which gives it a transverse tilting movement. This transverse tilting movement has, besides the effect of the ordinary vanner, the effect of throwing off the gangue better, thus causing the separation to take place sooner and the concentrates to be richer, while at the same time the different minerals separate into much sharper zones. A small Raff wheel may be used to return the middlings, but better results are obtained when they are handled on a separate concentrator.

The machine occupies a space $3 \times 6 \times 15.83$ feet and is easily taken apart. It makes from 200 to 220 strokes per minute, which may be varied from 1.19 to 1.38 inches in length. The table requires about 6.5 gallons of water per minute and will handle between 880 and 1300 pounds of ore per hour, as fine as 0.004 inch.

§ 1250. WOODBURY TABLE.[44] — The original style of the Woodbury table is described in Vol. II., page 676 of Ore Dressing. By data and experience gained from the original type the table has been improved and altered to what is known as the "New Woodbury Concentrator." The table has either a wooden or concrete foundation.

It differs from the Overstrom in having the riffles parallel to the tailings side. It differs from the Card in having the hinged portion without riffles. The concentrates are discharged at the mechanism side of the table.

The reciprocating motion is imparted by the revolution of a cam-shaped

disc, against which is pressed an idler wheel attached to the table. This pressure is given by a spring at the other end of the table (see Fig. 759).

The wash water, both on the feed and concentrates sides, is supplied by means of water boxes similar to those found on belt machines (see Fig. 760).

The slope of the table is adjustable by means of a tilting frame placed under it. The wooden table top, shaped like a rhomboid, stands on six toggle rods.

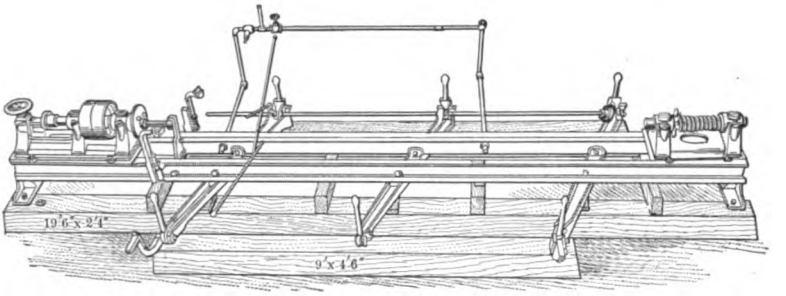

FIG. 759. — FRAME OF NEW WOODBURY CONCENTRATOR.

On it is placed the covering of rubber in which are cast the riffle cleats. The top riffles run the length of the table and the others gradually decrease in length toward the tailings side so that the lowest riffle is about 2.5 feet shorter than the top one. They all end in a line at right angles to the tailings side and the line of motion. Thus it will be seen that there is a triangular-shaped cleaned-ore plane at the concentrates side of the table with the apex at the upper end and with a base, 2.5 feet long, at the bottom. This part of the table is so con-

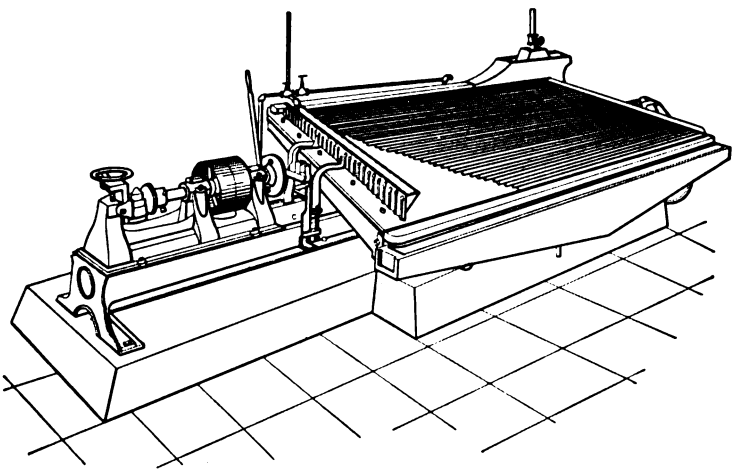

FIG. 760. — THE NEW WOODBURY CONCENTRATOR.

structed that it can be elevated at will by means of five adjusting screws. By raising or lowering this plane the line at which the tailings and concentrates part company may be regulated, allowing only clean concentrates to climb the plane. This arrangement requires less space on which to clean the concentrates than is required by many other tables, and the claim is made that the fine concentrates are taken off the table as soon as possible instead of being

forced to travel some distance across a plane over which wash water is flowing. This water tends to carry the fine material into the tailings, thus causing losses. As the top riffles run nearly the length of the table a large percentage of the concentrates are caught in these upper riffles and discharged at a point as far as possible from the tailings.

The table requires from 0.25 to 0.50 horse-power, runs at 260 strokes per minute, takes 8 gallons of water per minute and is said to treat from 15 to 20 tons of quartz ore, or from 25 to 30 tons of black sand in 24 hours.

§ 1251. Since the three following concentrators have many of the characteristics of this group they are placed here. They have no riffles and are used solely for the concentration of very fine material, especially slimes. They all have an inclined separating surface, a movement, or its equivalent, of that surface in a forward direction for carrying the concentrates and a jerking motion to stratify and advance the mineral particles. The tailings are washed off the side and the concentrates at the end as in all tables of this class.

§ 1252. BELT PERCUSSION TABLE. — The Humboldt Engineering Works Company [35] makes a belt percussion table, shown in Fig. 761, which is par-

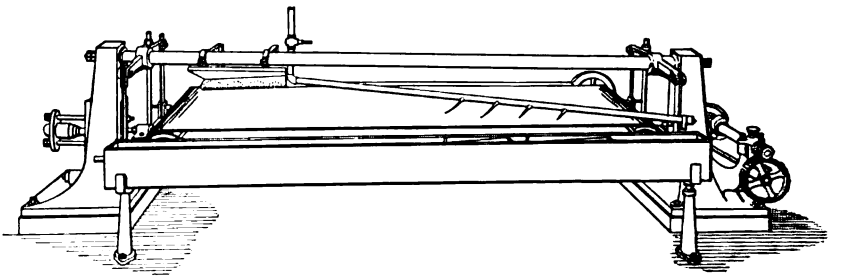

FIG. 761. — BELT PERCUSSION TABLE.

ticularly suited for the concentration and separation of metalliferous slimes, especially for rich slimes. The surface of the table is inclined longitudinally, as well as transversely, from the point at which it is fed. Thus the separation of the slimes takes place on an endless rubber belt subjected to percussive movement. The inclination to the front, as well as the inclination of the belt longitudinally, can be adjusted. This must be greater, the greater the speed of the belt. Comparatively little spray water is required.

The India-rubber belt is about 40 inches wide and 10 feet 3 inches long from center to center of the drum and 0.156 inch thick. The edges are rounded so that the pulp runs off easily. The belt moves over a wooden table with water lubrication and, therefore, rests on a bed of water and is guided by a roller in its lower part.

As may be seen by looking at the figure, the mechanism for producing the percussive movement as well as for the motion of the belt is very simple, consisting of a cam, spring, and bumping post. The belt guides itself on the barrel-shaped rollers. The speed of the belt can be adjusted by means of stepped chain-wheels. The driving shaft makes 80 revolutions per minute, thus giving the table 160 single strokes. One-half horse-power is required and the table will treat 3.5 to 6 tons of slimes (dry weight) per 24 hours.

§ 1253. THE LUHRIG SLIMER "Buss" patent [37] consists of a belt 5.5 feet wide traveling slowly on end rollers, the portion between being supported by a plane surface of wood. The belt is of a special composition canvas with a rough surface to hold the fine slimes. The tailings are carried off on the side at the foot of the slope by the wash water, while the concentrates come off at

the end and are removed by a dipping roller as in the Frue vanner. The table is given a bumping motion by cam, spring, and bumping post and the frame is supported on spring-steel toggles attached at their ends.

§ 1254. THE BARTSCH ROTARY PERCUSSION TABLE, made by the Humboldt Engineering Works Company [35] (see Vol. II., page 691), consists, in the first place, as may be seen in Fig. 762, of an accurately turned and ground cast-iron table, 4 meters in diameter. While the slimes and spray-supply arrangements, together with the product-receiving troughs, revolve slowly around the table, the table itself is rotated forward for 6 or 8 millimeters against a compressed spring by means of a cam disc, and then brought suddenly back by means of the spring against stops. In this way the table gets about 160 horizontal circumferential shocks per minute.

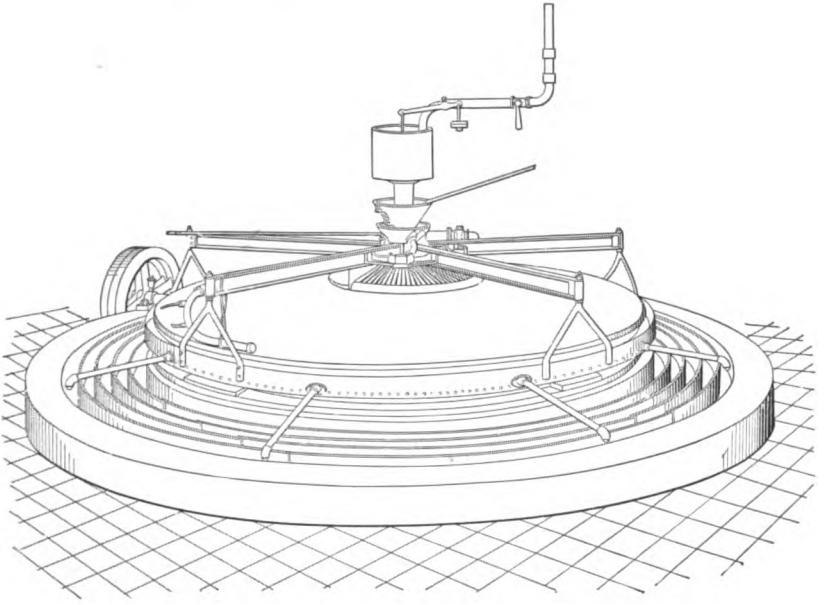

FIG. 762. — THE BARTSCH ROTARY PERCUSSION TABLE.

The direction of rotation of the parabolic spray pipe is opposite to that of the percussion movement of the table, and the ore particles are, therefore, driven by the shocks in the direction of the spray. The heaviest are driven forward the fastest and take the form of a curve in front of the spray, while the lighter ores and slimes are separated into zones. The parabolic form of the spray pipe is a similar curve to that which would be described by an object traveling from the top of the table to the periphery and subject to the influence of the percussive strokes alone. As a result of this the spray plays in a natural manner on the curve of ore produced by the percussive strokes and washes it down over the edge of the table.

The launders have suitable slides so that, when running, the products may be caught at any desired point to suit circumstances. The capacity of this table is from 12 to 18 tons of dry slimes per 24 hours, using about ½ horse-power.

B. END-BUMP GROUP.

For tables of this class the reader is referred to Vol II., pages 680 and following.

§ 1255. General Comments on Rectilinear Tables. — The majority of rectilinear tables have brought the diagonal line to the corner. While there are certain advantages there are also certain disadvantages, as it is rather difficult to place under the corner a stationary divider which shall direct all the material coming off the concentrates side into its compartment, and prevent all that coming off the tailings side from contaminating it.

If the divider is plumb under the tailings edge of the table, some of the middlings will certainly go into the concentrates compartment; if the divider is in the direction of the diagonal, some of the middlings will be thrown into the concentrates. If the diagonal comes to the tailings side instead of the corner, and if the divider is placed at the end of it, the same difficulty exists. If, however, the diagonal ends on the concentrates side so far away from the corner that a large part or the whole will be discharged over this side, then, the divider being parallel to the motion and therefore to the swing of the falling particles, the division between concentrates and middlings, and middlings and tailings, becomes very perfect.

Again, a difficulty has always existed in keeping the table wetted on the concentrates side. Special spray pipes have been put on for this purpose which have the disadvantage that they disturb the direction of the movement of the lines of concentrates grains, and therefore interfere with any divider used. If the concentrates side of table is cut off obliquely to the cross flow of the water instead of being parallel, the upper end being farther out than the lower, the spray pipe or launder on the feed side will then thoroughly wet the whole of the concentrates side without the additional distributing spray.

Comparing the two methods "tacking on" and "grooving" in order to obtain the tips in a diagonal line, the tacking on, as has been already stated, causes a slight valley between the two planes along the line of the tips, which narrows the fan of concentrates and necessitates a longer table; while the grooves, having no valley, give a wider fan and permit of a shorter table.

For tables treating slimes it seems that the use of riffles only results in keeping the slimes in a constant state of agitation, while a stratifying basin with a surface of linoleum settles and catches particles which may then be removed by riffles as guides. The Deister No. 3 table and the James slimer are examples of this sort of construction.

Summing up, the ideal table top seems to be the riffle groove cut in the surface, with tips ending in a diagonal line coming out at a point far enough from the corner upon the concentrates side to admit of having all the dividers placed on the concentrates side on the slope; while the concentrates side should be cut off obliquely so as to avoid the need of an edge spray.

II. Mechanical Agitation of Pulp, Traveling Surface, Water Current.

§ 1256. Under this heading come vanners, film-sizing tables, etc.

II. C. VANNERS.

§ 1257. Vanners do their work upon the upper surface of an endless belt, which is slightly inclined from the horizontal, and receives either a rapid shake in the plane of the belt as in the case of the vanners described in Ore Dressing, Vol. II., pages 645 to 667, or an undulating motion, the center of the belt remaining in the same horizontal plane. The belt at the same time has a continuous, slow motion up the slope. This agitation, in whatever manner effected, makes the bed so loose that minerals of higher specific gravity can settle to the lower layer, while those of lower specific gravity rise to the upper layer.

The travel of the belt carries the heavy mineral to the upper end, and the surface water washes down the light mineral to the lower or tail end.

There have been described in Vol. II. three classes of vanners to which a fourth may now be added, with which we shall chiefly concern ourselves in this chapter. The remarks that have been made in Vol. II. with regard to the operation of vanners still apply and only such new facts as have come to the author's attention recently, will be given in this place.

The vanners may be divided into four classes as follows:

a. The side-shake, which vibrate at right angles to the direction in which the belt moves. Example: Frue vanner.

b. The end-shake, which vibrate parallel to the direction in which the belt travels. Example: Triumph vanner.

c. Gyrating in the plane of the belt. Example: The Ellis concentrator.

d. Tipping or undulating motion at right angles to the direction in which the belt moves. Example: The Johnston vanner.

II. *C a. Side-Shake Vanners.*

§ 1258. FRUE VANNER. — The Chalmers and Williams Frue[10] vanner is mounted on cast-iron legs. The rear legs of the vanner are provided with ribs which hold in place pieces of plank acting as struts. The rear legs are bolted together by means of long tie rods. The concentrates box forms a strut between the two front legs which also are held together by tie rods. This method of bracing makes a rigid structure. The carrying rods which support the shaking frame are expanded or enlarged at their ends, and in place of pieces of rubber being jammed into the little bearings which receive the two ends of these supports, the enlarged end makes possible the use of leather belting in a rounded bearing which is more durable and satisfactory.

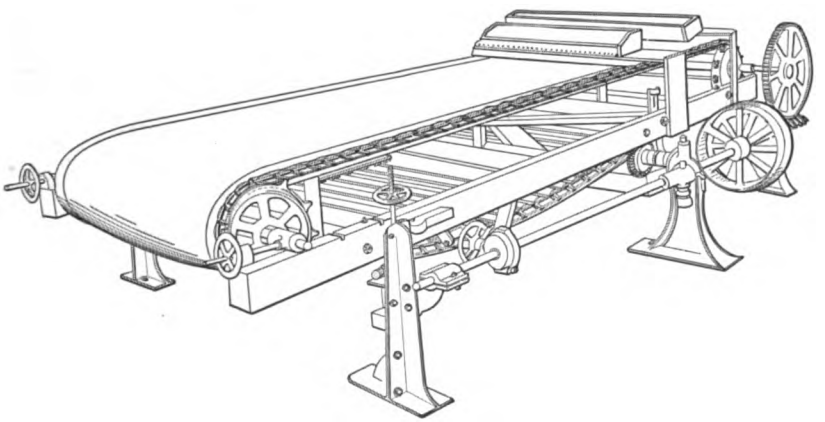

FIG. 763. — THE HORN ROTARY SLIME CONCENTRATOR.

§ 1259. THE HORN ROTARY SLIME CONCENTRATOR.[27] — The Horn Rotary slimer, manufactured by the Peter McFarlane & Sons Iron Works Company,[40] combines the advantages of a canvas table and a vanner in the saving of slimes. As shown in Fig. 763, the concentrator consists of a canvas belt having a continuous rotary motion lengthwise of the machine. The canvas belt is attached at either side to sprocket chains running over sprocket wheels and is stretched so that it remains perfectly smooth whether at rest or in motion, wet or dry, and also under a speed of 6 feet per minute with 200 side reciprocations per

minute which are the conditions under which it is run. The slimer seems to be of simple and durable construction and is guaranteed by the makers to run 5 years without repairs other than the replacement of the canvas belt, which lasts from 6 to 18 months according to the character of the ore, water, and other conditions under which it is run, and is inexpensive to replace.

It is claimed that the concentrator weighs 1400 pounds, requires ½ horse-power and, with a large capacity, makes a saving of values on Colorado ores varying from 75.0 to 97.0% with an average of about 80.0%.

II. C b. End-Shake Vanners.

§ 1260. THE AKENS AND EVANS SLIMER[13] (see Fig. 764), made by the Colorado Iron Works, has a belt of canvas mounted on a shaking frame to which endwise or longitudinal reciprocations are imparted as to a Triumph vanner. At the feed end of the belt is a triangular feed box (1) which makes a triangular depression (2) in the surface of the canvas across nearly its whole width.

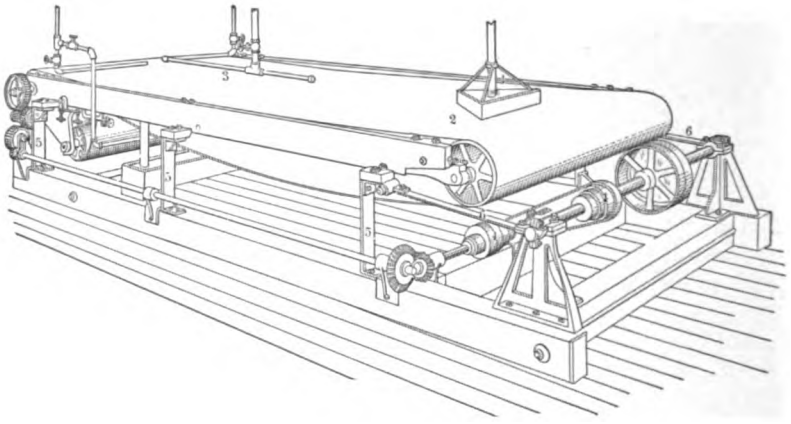

FIG. 764. — THE AKENS AND EVANS SLIME CONCENTRATOR.

The apex of this triangular depression is a little less than half-way from the feed-end roller to the discharge-end roller. Beneath the belt are suitable frame pieces of wood covered with linoleum over which the canvas slides to maintain the lines of this depression; and to maintain also a line extending from the apex to the discharge roller, which is slightly elevated so that the wash water and slimes are washed off the belt into launders at the sides. The belt runs over drums which are regulated as in a vanner. The feed, when it is introduced into the depression in the belt, enters a quiet pool of water maintained by the triangular depression. This allows the concentrates to settle. As the belt moves on it comes into the region where it is acted upon by the wash water supplied from a pipe (3) along the ridge or elevated medial line. In this way the tailings are washed into launders at the sides, while the concentrates, adhering to the belt, are carried over the discharge-end roller and washed off into a concentrates tank beneath the table. Adjustments by means of step pulleys (4) are provided for varying the speed of travel of the belt, which should be from 26 to 56 inches per minute. The shaking frame is supported by means of hickory toggle springs (5) and moved by means of eccentrics (6). The floor space required is about 7 × 16 feet. This table has just been put upon the market and no data as to its capacity or durability are available.

II. *C c. Vanners Gyrating in the Plane of the Belt.*

(See Ore Dressing, Vol. II., page 657.)

II. C d. Vanners with Tipping or Undulating Motion.

§ 1261. THE JOHNSTON VANNER.[41] — The chief difference between the Johnston vanner and the Frue vanner is in the fact that, instead of a horizontal side shake, it has an undulating motion imparted to the shaking frame, which is designed to prevent the sands from piling up against the edges of the belt. This vanner is shown without the belt in Fig. 765. The shaking frame (1),

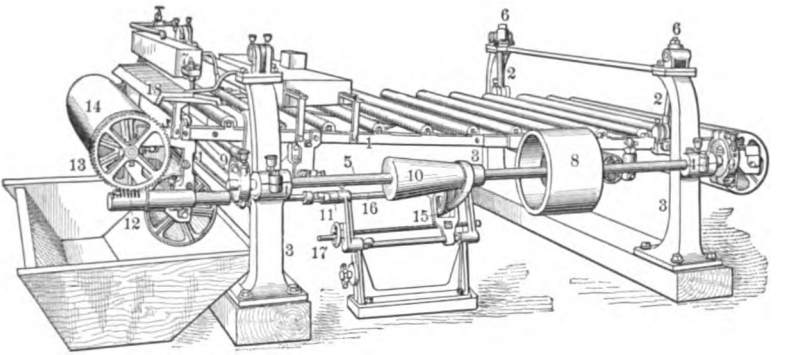

FIG. 765. — FRAME OF JOHNSTON VANNER.

instead of being supported from below, is suspended by four non-parallel suspension links (2), one at each corner, which, when attached to the stationary frame, are about 3½ inches farther apart than the lower ends which are attached to the shaking frame.

The stationary frame consists of wooden base-frame timbers. On the base frame are mounted four hollow cast-iron corner posts (3) which are braced with struts. The upper ends of these posts are the supports for the links (2) by which the shaking frame is suspended. They also form, on one side of the machine, the supports for the journal boxes (4) of the main driving shaft (5) and, at the head end, for the water box (7). The two links at the rear end of the vanner are so arranged as to permit of raising or lowering the shaking frame through nuts (6). The shaking frame, which carries the five drums, is made of channel irons and rods and is so arranged that it can be made square by lengthening or shortening the diagonal tension rod provided for that purpose. The effect of supporting this frame by the links, as described above, is to impart to the table a motion which tends to toss the grains nearest the edges of the belt back toward the center in a manner somewhat analogous to the action of the Ferraris screen.

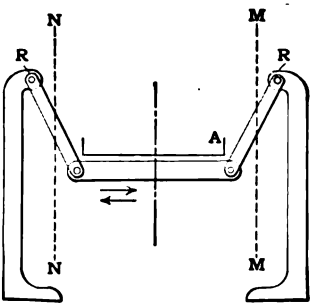

FIG. 766. — EXAGGERATED DIAGRAM SHOWING JOHNSTON VANNER MOTION.

This may be more apparent from the exaggerated Fig. 766. The vanner belt with its upturned edges is there represented as resting upon the shaking frame which is suspended from the corner posts by non-parallel links. The figure is a cross-section, through two links, across the belt. Now if the shak-

ing frame is swung right and left no farther than the dotted lines *M*—*M* and *N*—*N*, the two edges of the table will move in arcs of circles whose centers are at *R* and *R*, the upper supports of the links. The effect of this on a grain resting at *A* will be to move it toward the center of the belt; for, as the frame moves to the left, it rises, carrying the grain to the left with it, but as the frame moves to the right, the belt has a tendency to drop away from the grain and to travel a certain small distance to the right farther than does the grain. Since this operation is taking place many times per minute, its effect is greatly multiplied. This effect is so regulated as not to interfere with the even distribution of the pulp over the surface of the belt. The shaking frame simply undulates, there being one point at the exact center line of the belt which travels in a truly horizontal line at all times. This mechanism does not interfere with the concentrates on the belt, however, as is apparent from the good work this vanner is doing.

Power is supplied to the pulley (8) (see Fig. 765) and is transmitted by means of the two eccentrics (9) to the shaking frame, and through the cone pulley (10), universal joint (11), worm (12), and gear (13) to the head roller (14) which advances the belt. The pulley (15) is secured to the shaft (16) by means of a spline or feather in such a way that by turning the hand wheel (17) the speed of belt travel may be readily adjusted.

The feeding device of this machine differs somewhat from the usual method. The supply of pulp after passing through a staggering device is received upon the metal bottom of the pulp box. This pulp box is provided with slots which are parallel to the edges of the belt, ¼ of an inch wide and 10 inches apart. The pulp is therefore fed upon the belt in lines 10 inches apart, and when it spreads out and the heavier portions settle upon the belt, they are not disturbed by the further addition of pulp. The concentrates, while being carried to the head end of the shaking table on the traveling belt, pass under the clear water box which is solidly supported by the main posts. The water from this box flows first to a distributor (18) which is attached to the shaking table and moves with it; and from the distributor the water is delivered through a series of small tubes placed about 5 inches apart. The concentrates are then removed in the usual manner by passing the belt into a tank of water underneath the head end, where a spray of water assists this operation while a way is provided for turning a wash-off spray onto the idle side of the belt, if this should be desirable. The settling box, for saving the fine material which is kept in suspension by the agitation of the water in the concentrates tank, is not placed immediately under the machine but at some distance; and the Risdon Company recommends that for a 20-stamp mill one such tank be used 14 or 16 feet long by 6 feet wide, and 2 or 3 feet deep.

Adjustments to guide the belt may be made on any one of the three drums of this vanner; the head and tail rollers are in movable bearings adjusted by set screws and there is a movable drum also beneath the machine. The grade or slope of the belt, recommended by the makers, is four or five-sixteenths of an inch to the foot; and, when treating the pulp from a 5-stamp mill, one-half to one miner's inch, or from 5.5 to 11 gallons of water per minute is required. The makers claim that a 6-foot vanner will handle the pulp from 5 stamps or about 12 tons per day.

The gentle movement, due to the low speed, adds much to the life of the machine, and the low flanges (½ inch high), possible because the sand does not reach the edges, add to the life of the belt.

At Mill 167 the Johnston vanners are provided with adjustable head suspension hangers as shown in Fig. 767.[23] The bearings of the hangers may be thrown over towards the center until the hangers are perpendicular, if desired.

The 2.25-inch divergence, shown in Fig. 767, is approximately what is used in practice. The throw is 2 inches and the vanner makes 120 to 130 throws per minute.

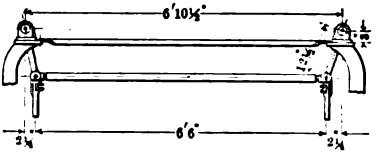

FIG. 767. — JOHNSTON VANNER SUSPENSION USED AT MILL 167.

§ 1262. SUSPENDED FRAME VANNER. — The Allis-Chalmers Company[3] is manufacturing a "Suspended Frame Frue Vanner" which is similar to the Johnston vanner with the exceptions noted below.

Adjustable side-shake motion regulated by eccentrics; combined cone pulley, belt tightener, and adjustable support for the belt travel; adjustable gate on each pipe of the water distributor, and independent adjustment at the four corners for regulating slopes.

The capacity of the machine varies from 8 to 18 tons in 24 hours. One to 1.5 gallons of clear water for washing and 1.5 to 3 gallons with the pulp per minute are required. The drive shaft makes 160 to 200 revolutions per minute and about 0.5 horse-power is required to operate the machine. The usual styles of vanner belts are used.

§ 1263. THE SPADONE CONCENTRATOR BELT is manufactured by The Gutta Percha Rubber and Manufacturing Company.[33] This belt is made with an edge which does not require that it be longer than the flat surface of the belt in order to go around the rollers. Its shape is such that when making a turn the ends flatten down outwardly, and straighten up again after having come again to a plane. There are two layers of canvas in the belt; and there are transverse riffles of triangular section 1 millimeter in altitude on the surface.

§ 1264. THE "CRACK-PROOF" VANNER BELT.[7] — The "Crack-Proof" concentrator belt, shown in Fig. 768, is sold by the Risdon Iron Works. Its edge is made straight, of a quality of rubber which is claimed to be capable of stretching seven times its length, and of withstanding a tensile stress of 1,600 pounds per square inch. The main body and side flanges are united by a separate strip of duck as shown in the illustration. This strip is cut on the bias, enabling it to stretch without breaking loose.

FIG. 768. — SECTION OF "CRACK-PROOF" VANNER BELT.

§ 1265. SHACKELFORD'S PATENT BOX-CLEANING DEVICE.[8] — This ingenious device is used in Mill 167 to save the manual labor required in shoveling products from the vanner concentrates boxes. On this account, and because of several minor improvements at this mill, one man is able to take care of 92 Johnston vanners per shift. Figs. 769*a* and *b* illustrate this idea so that only a very short

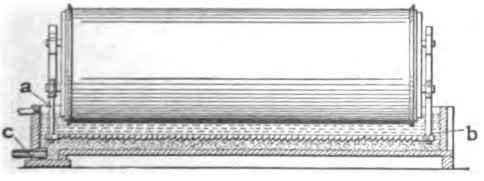

FIG. 769*a*. — SHACKLEFORD'S PATENT BOX-CLEANING DEVICE.

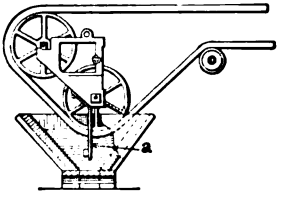

FIG. 769*b*. — LONGITUDINAL SECTION.

description will be necessary. Straps *a* have one end securely bolted to the shaking frame of the vanner, while the pushing device *b* is bolted to the other end. The pusher *b* is made by cutting saw teeth in a board or plank and,

when the vanner is in motion, this board pushes the concentrates when traveling in one direction and slips over them on the return stroke. As the concentrates tend to heap up in one end of the box they are discharged, with a small amount of water, through spigot *c*, the weight of the water above assisting in this work.

D. SLIMERS.

§ 1266. WILFLEY SLIMER.[38] *Principle of Operation.* — By means of the vibratory motion of a canvas deck the fine, heavy, mineral particles are forced down through the lighter gangue particles. The heavy particles thus layered are caught by the interstices of the canvas, while the gangue is washed off with the wash water. The machine consists of a sub-frame, head motion, shaking frame, and a set of trays with canvas surfaces.

§ 1267. *Sub-frame.* — The slimer rests on a sub-frame similar to that used for the Wilfley table.[39] It consists of a longitudinal timber supported at each end by a transverse foot-piece. The different members of this sub-frame are held together by means of bolts. On one end of the longitudinal timber is placed the head motion which is directly connected with the table.

§ 1268. *Head Motion.* — The head motion of the Wilfley slimer is a simple toggle and pitman movement exactly like that used on the Wilfley table (see § 1213).

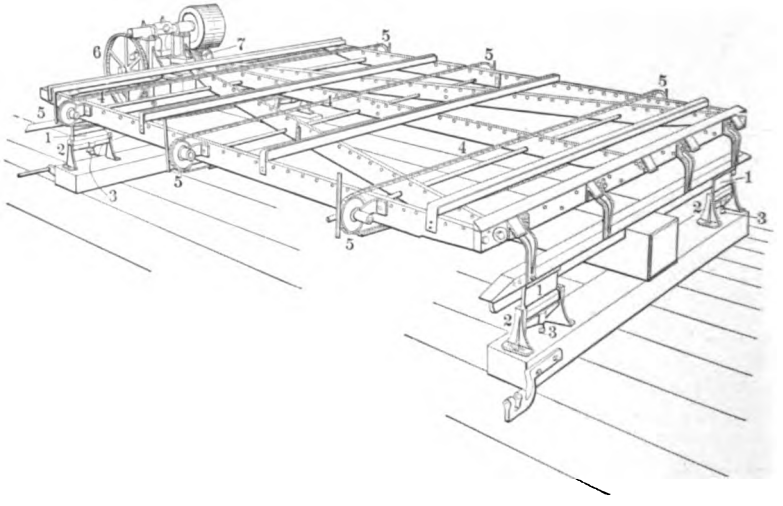

FIG. 770. — FRAME OF WILFLEY SLIMER.

§ 1269. *Shaking Frame.* — Connected to the head motion is the shaking frame Fig. 770. This consists of a skeleton framework thoroughly braced so as to minimize vibration. It is supported at each corner on a cast-iron rocker (1) resting on long bearing feet (2), the latter being securely bolted to the sub-frame. In each foot is a set screw (3) bearing on the lower face of the rocker bearing. These adjusting screws give the different slopes to the table. Running transversely with the sub-frame, and equally spaced from each other, are three link belts (4). Sprocket wheels (5) at each end, actuated by a shaft (8) driven from the main drive by reducing gear (6) and worm (7), move the set of trays.

§ 1270. *Trays.* — Placed on the link belts (4) are the decks or trays (9) (Fig. 771). These trays move slowly across the frame. The bottoms of the

trays are covered with canvas painted with a special preparation. They are arranged side by side parallel with the line of motion of the table.

§ 1271. *Operation.* — When working, the pulp is generally fed to five trays which yield tailings over the lower ends. The remaining trays, on top of the shaking frame, receive wash water and deliver middlings from the lower ends. The trays, when charged with concentrates, pass over the side and return beneath, where the concentrates are removed by oscillating sprays of water.

This slimer cannot save coarse concentrates. This being the case it should never be called upon to treat a natural feed or mixed pulp, unless the latter is very fine, and, even then better work can be done by first feeding the pulp to a vanner or table and then re-treating the resulting tailings on the Wilfley slimer. The vanners and tables lose the very fine concentrates in the tailings which this slimer was designed to recover.

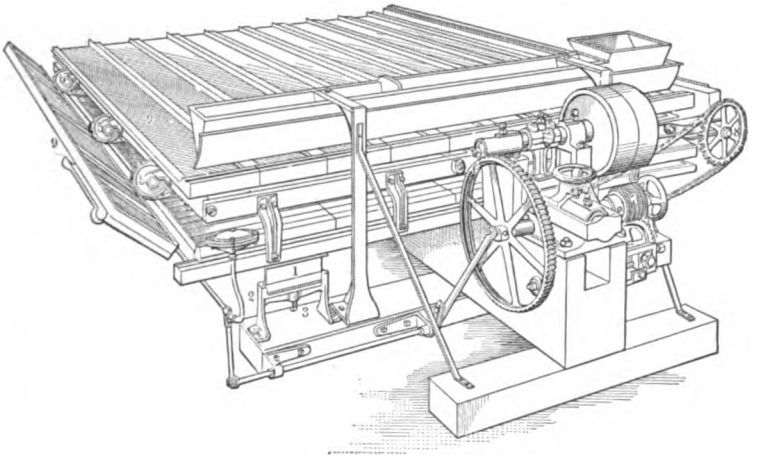

FIG. 771. — THE WILFLEY SLIMER.

The jerking motion of the mechanism usually pushes the pulp on the trays down the slope towards the tailings end. In certain cases the progressive motion has been up the slope and a "neutral bump" has also been tried. As stated above, the feed to the slimer should be tailings from some other concentrator. When this kind of feed is supplied the head motion is so arranged that the jerking motion pushes the pulp down the slope. If a natural feed were sent to this table with progressive motion down the slope, it would be found that the loss in the tailings would be very high, owing to the fact that all the large particles of heavy mineral, instead of being saved on the canvas, were washed down with the tailings.

When a natural feed is sent to the slimer before previous treatment on other concentrators, the progressive motion is then made toward the upper end. This motion has also been used when the tables have been found to give unsatisfactory results with the regular down-slope treatment. Although the coarse concentrates are saved with a progression toward the upper end, the increased amount of water needed for washing off the tailings is found to carry off the very fine concentrates. It is therefore poor policy to feed any but the proper feed to the slimer. The mechanism should be swung through 180° and adapted for either coarse or fine sands up or down the slope. The two cannot be treated together.

The slimer makes 180 reciprocations per minute, treats from 10 to 20 tons

per 24 hours, and requires from 5 to 10 gallons of water per minute. It requires 1 horse-power to run it. The weight is 3400 pounds. There are 20 trays and they make one complete circuit in 45 minutes. The slope is 2 inches in 12 feet.

§ 1272. THE SHERMAN SLIMER.[32] — The Sherman slimer, shown in Fig. 772, is of the Wilfley slimer pattern as regards an endless belt of trays. All the feed comes directly to one tray at a time. The trays on the feed end of the table are given a rise of 2 to 3 inches toward the discharge end. Now, while the pulp on these trays is held by an up-grade, the panels are passing a series of bumpers, transmitting to the trays a series of shocks which, in turn, stratify the material on the trays. As the trays advance, their grade is succes-

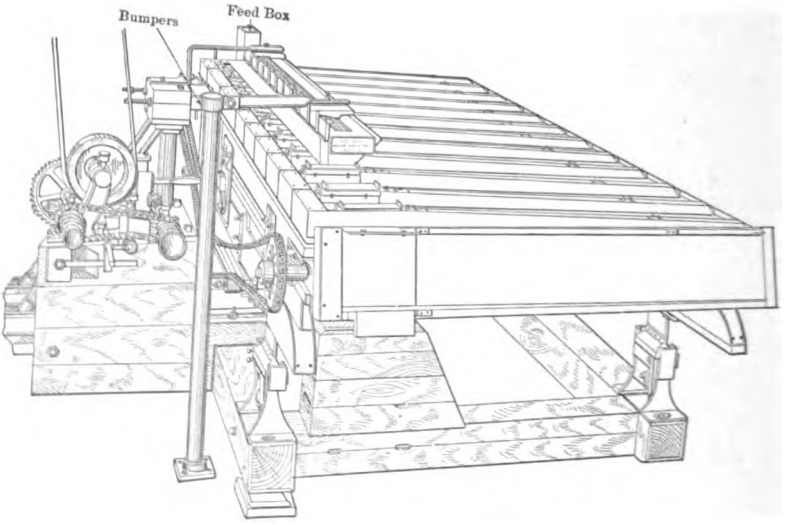

FIG. 772. — THE SHERMAN SLIMER.

sively increased and the top strata washed off. When the trays have the silica or gangue nearly washed off and the washing carries some mineral, this product can be caught as a middlings product and be re-treated.

Working on a lead product carrying only 2% lead and the undersize of a 200-mesh screen this slimer has effected a 95% saving of the lead. The comments that have been made as to the feed for the Wilfley slimer apply with equal force to this machine.

II. E. FILM SIZING TABLES.

§ 1273. CONTINUOUS-SURFACE ROUND TABLES. — These tables will be found described in Vol. II., pages 686 and following, and the reader is referred to that place for a full discussion of this class of machines.

§ 1274. The Acme table, manufactured by Holman Brothers Ltd.,[33] is a double round table made up of two concentric circular beds, inclining at suitable angles towards each other; the inner convex, the outer concave. The classified pulp is first treated on the concave outside bed, and the concentrates from this are elevated and further treated on the convex inside bed. It is used in Cornwall for dressing "tin slimes" and is said to give good results.

III. Current Transportation without Mechanical Agitation. Intermittent, Require Stopping for Removal of Concentrates.

This class of machines includes rag frames; canvas, carpet, and blanket tables; building buddles and riffles.

III. F. FRAMES, ETC.

§ 1275. Rag Frames.[22] — Figs. 773*a* and *b* (see page 1508) give a good idea of the rag frame used for treating very fine slimes in the "tin" ore-dressing plants of Cornwall, England. The water containing "tin" in the form of slimes flows through the launder *A*. At the bottom of this launder there is a hole through which the "tin" slimes fall on the distributor *B*, which distributes the feed evenly over the whole surface of the table. As the slimes are flowing over the surface of the table, the tendency is for the lighter slimes to pass over into launder *C* and for the heavier to remain on the table until they are washed off into launder *D*.

The launder *E* conveys clear water and supplies buckets *F* and *G*. The water that flows into bucket *F* serves to wash the heavier "tin" off the table. This washing is caused by the tipping of bucket *F*, owing to the center of gravity changing with the incoming clear water. At the same time that the bucket *F* tips, the flap *H* at the bottom of the table is automatically raised on hinges and the heavier slimes and clear water drop off into launder *D*. While this is happening bucket *G* is being filled with clean water and, when the bulk of water has attained a certain center of gravity, the weight of water in this bucket causes it to tip and bring bucket *F* and flap *H* back into their original position.

§ 1276. The New Dimmick Patent Slime Table.[16] —This resembles an ordinary canvas table with the one addition of a comb settler. It consists of a light frame covered with redwood slats having small spaces between them. On this covering is placed water-proof P. B. Compound felt, and over this, canvas. The table rests on four screws, one at each corner, by which it can be adjusted to any desired pitch.

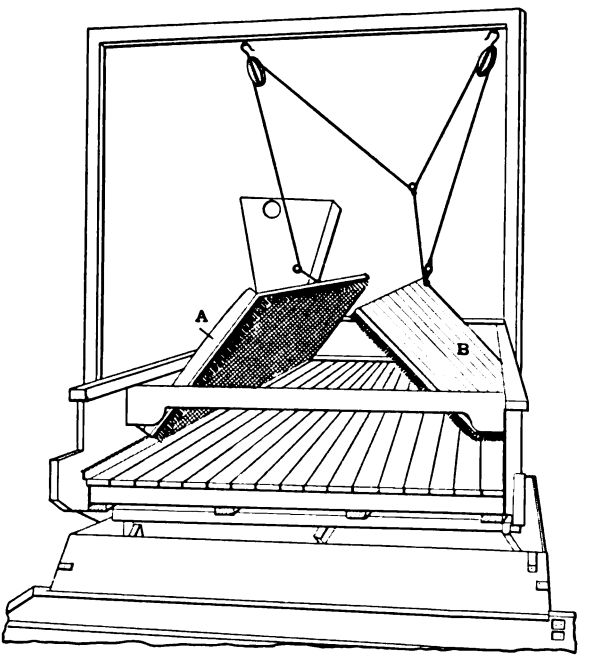

FIG. 774. — DIMMICK SLIME TABLE.

As shown in Fig. 774, board covers *A* and *B* are hinged to the sides and are raised and lowered by means of a system of counterbalanced weights, ropes, pulleys, and levers. These covers have 12,000 6-penny finishing nails driven through them to template. The nails are staggered throughout and rest evenly on the surface of the canvas when the covers are lowered. The nails or pins project about 1.5 inches from the bottoms of the covers and act as small riffles

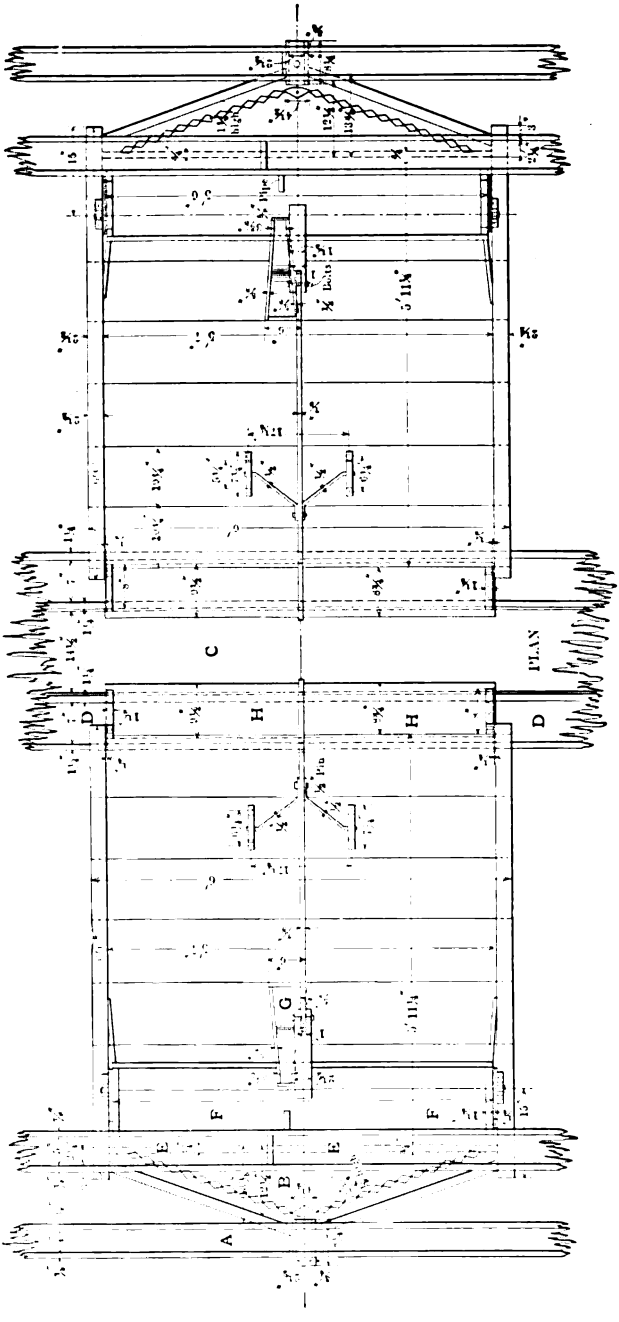

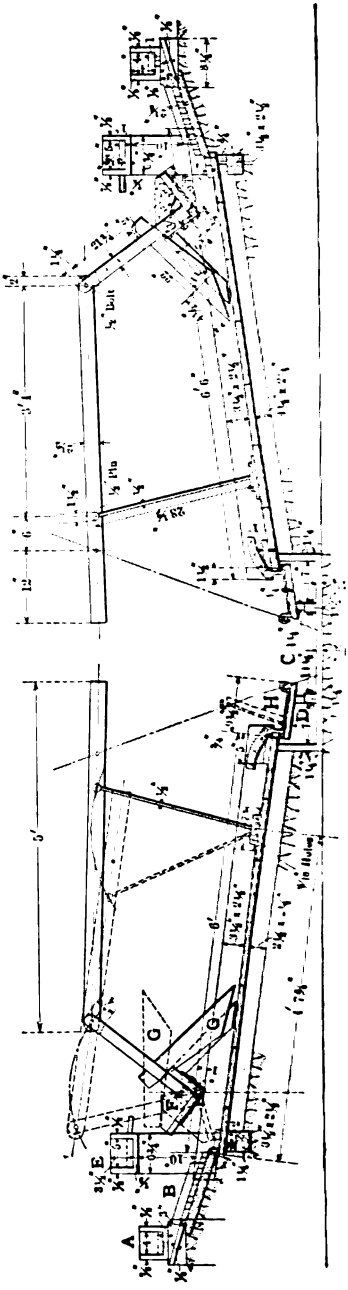

FIG. 773*a*. — PLAN OF RAG FRAMES.

tending to precipitate the floating mineral particles onto the canvas, where they are caught, while the tailings are washed off with the water at the bottom. By raising the covers the concentrates are readily hosed off in a short period of time and the process repeated.

III. H. RIFFLES.

§ 1277. CARIBOU RIFFLE.[17] — A form of riffle known as the Caribou riffle has been used as a preliminary black-sand concentrator, to reduce the amount

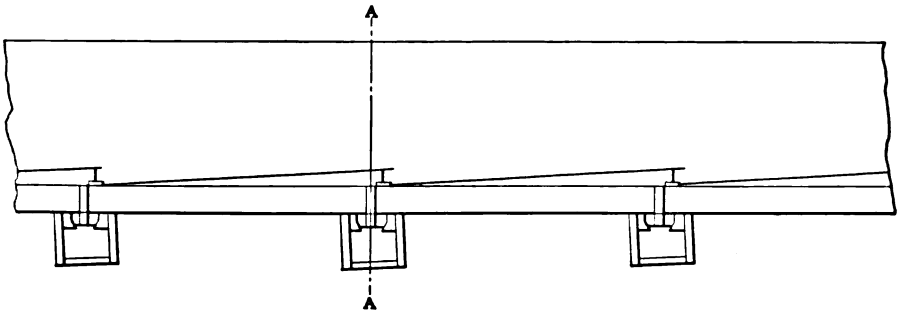

FIG. 775*a*. — CARIBOU RIFFLE.

of material to be treated on the "undercurrent." The riffles are sheets of perforated steel, 3 feet long, placed over a blanket. The up-stream ends of the sheets rest on the blanket and the lower ends are secured about 2 inches above the blanket. A row of holes, 1 inch in diameter and 3 inches apart, across the bottom of the sluice box under the lower end of each sheet, allows the black sands to be discharged into a launder placed cross-wise under the sluice. A wooden slide with corresponding holes is placed beneath each discharge, whereby the amount of water and sand passing through can be regulated. This form of riffle was extensively used on the Snake River, Idaho, and is claimed to be very effective in saving the fine gold. (See Figs. 775*a* and *b*.)

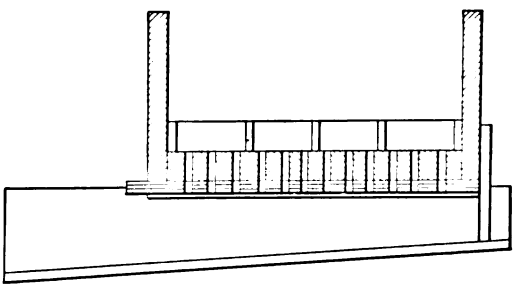

FIG. 775*b*. — CROSS-SECTION AT *a*–*a*.

§ 1278. LA POINT SUSPENDED RIFFLE CLEATS.[6] — The La Point Flour Gold separator is manufactured by the C. A. La Point Flour Gold Separating Company, 306 Cooper Building, Denver, Colorado.[28] The principle of the device is shown in Fig. 776. It is constructed of 12-gauge sheet iron throughout, except the riffle cleats which are of 16-gauge galvanized iron. It is built in three sections, each 3 feet in length, and telescopes to facilitate transportation. The bottoms of the boxes are covered with tight-fitting Brussels carpet for catching and holding the fine gold, and the first two sections have suspended riffle cleats while the last section is only provided with block riffles for catching the coarser gold. As shown in the cut the suspended riffle cleats are concaved upward toward the down-flowing water. They extend to within 1.5 or 2 inches (adjustable) of the bottom, and are set 2 inches apart in the first section, and 3 inches apart in the second. A 1.5-inch drop exists between each section and the sections incline 8 inches in the 9 feet. The sides are 6

inches high and the separators vary in width from 14 to 48 inches, according to the capacity desired.

The feed, consisting of gravel or sand, is delivered to a screen having about a 0.25-inch opening, resting at and hinged at the head of the upper section. The undersize falls into the water and thence goes through the separator while the oversize goes to waste. The action of the ore and water in the machine is readily seen by referring to the illustration. The eddy currents produced by the suspended riffle-cleats precipitate the fine, floating, or floured gold and it is caught by the carpet, the greater part of the fine gold being caught in the first section, practically all of the remainder in the second, while hardly any ever goes as far as the third.

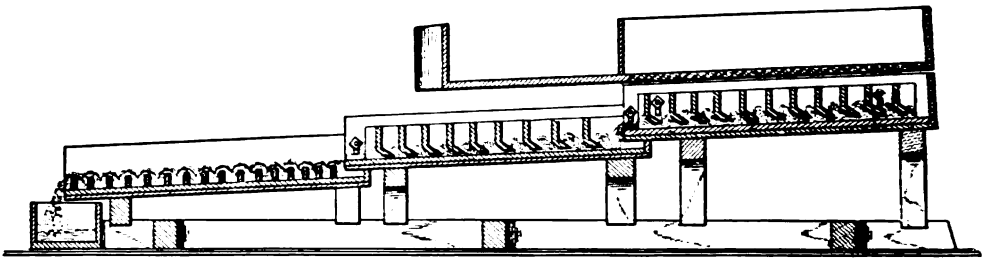

FIG. 776. — LA POINT SUSPENDED RIFFLES.

The separator has found application in treating the fine gold-bearing sands of Snake River, Idaho, and some Colorado placer sands. It is made in four sizes and Table 520 gives the details regarding it.

TABLE 520. — DETAILS REGARDING THE C. A. LA POINT FLOUR GOLD SEPARATOR.

Width in Inches.	Capacity in Cubic Yards per 10 Hours.	Weight in Pounds.
14	20	115
24	50	150
36	100	200
48	200	300

IV. Mechanical Agitation without Transporting Current, also Intermittent.

§ 1279. Kieves. — A description of this class of apparatus will be found in Vol. II., pages 726 and 727.

§ 1280. Depth of Bed. — In concentrators of all forms the depth of the bed seems to be of great importance. If too thick, good work is impossible, and if too thin, the capacity is cut down. The thickness of the bed may be defined as the number of grains of maximum size, one above the other, that would equal the depth of the bed. On this basis a bed is spoken of as so many grains deep.

The above machines may be rated as follows: A bed but 1 grain deep is all that should be used on film-sizing tables in order to give individual treatment to the grains. In jerking riffle tables of the Wilfley type the bed in the deeper part of the riffle may be 10, more or less, while at the shallow end the bed may be only 1 or 2 grains deep. Bumping tables may have a bed several grains deep. Vanners may have a bed 10 to 15 grains deep without complicating the work too much. The bed may be several hundred grains deep in

stationary riffles and several thousand grains deep in kieves and still give good results.

BIBLIOGRAPHY OF FINE SAND AND SLIME CONCENTRATORS.

1. Allis-Chalmers Company, Milwaukee, Wisconsin. Bulletin No. 1421.
2. Allis-Chalmers Company, Milwaukee, Wisconsin. Catalogue No. 124.
3. Allis-Chalmers Company, Milwaukee, Wisconsin. Catalogue and private communication.
4. *Am. Inst. Min. Eng.*, Vol. XXXVIII., (1907), p. 556. Robert H. Richards. The Wilfley Table I.
5. *Ibid.*, Vol. XXXIX., (1908), p. 303. Robert H. Richards. Wilfley Table II.
6. Benton, C. H., of Great Falls, Montana. Private communication.
7. Boss, M. P., of San Francisco, California. Pamphlet.
8. Callow, J. M., of Salt Lake City, Utah. Private communication.
9. Canby, R. C., of El Paso, Texas. Private communication.
10. Chalmers & Williams, Chicago, Illinois. Catalogue and private communication.
11. Christensen, C., of Oretown, Oregon. Catalogue and private communication.
12. Coggin, F. G., of Redridge, Michigan. Private communication.
13. Colorado Iron Works Company, Denver, Colorado. Catalogue No. 7E and private communication.
14. Colorado Iron Works Company, Denver, Colorado. Catalogue No. 5G.
15. Deister Ore Concentrator Company, Fort Wayne, Indiana. Catalogues and private communication.
16. Dimmick Concentrating Company, Los Angeles, California. Catalogue.
17. *Eng. & Min. Jour.*, Vol. LXXXIV., (1907), p. 251. F. Powell. The Black Sand Problem.
18. Ferraris, Erminio, of Monteponi, Sardinia. Private communication.
19. Foote, A. D., of Grass Valley, California. Private communication.
20. Fried. Krupp A. G. Grusonwerk, Magdeburg-Backau, Germany. Catalogue.
21. Goodale, C. W., of Butte, Montana. Private communication.
22. Holman Brothers, Limited, Camborne, England. Private communication.
23. Jackling, D. C., of Salt Lake City, Utah. Private communication.
24. Joshua Henry Iron Works, San Francisco, California. Bulletin No. 100.
25. Loughridge, Charles, of Denver, Colorado. Private communication.
26. McCabe, P. B. & Company, Los Angeles, California. Catalogue and private communication.
27. *Min. & Met. Jour.*, Vol. XVI., (1908), p. 18, July 3.
28. *Mining Science*, Vol. LVIII., (1908), p. 102. *The Recovery of Fine Gold in Placer Gravels*, Black Sands and Mill Tailings. No author.
29. Modern Mining Machinery Company, Portland, Oregon. Catalogue of The Christensen Concentrator Company Machinery.
30. Patent Specifications, No. 22874, September 9, 1899. Erminio Ferraris. "Improvements in Apparatus for Separating or Sorting Grains from Slime in the Dressing of Ores and the Like."
31. Pinder, J. W., of San Francisco, California. Private communication.
32. Sherman, F. W., of Park City, Utah. Private communication.
33. The Gutta Percha Rubber and Manufacturing Company, New York City, New York. Catalogue and private communication.
34. The Hendrie & Bolthoff Manufacturing & Supply Company, Denver, Colorado. Catalogue and private communication.
35. The Humboldt Engineering Works Company, Kalk, near Cologne, Germany. Catalogue.
36. The James Ore Concentrator Company, Newark, New Jersey. Catalogue A.
37. The Luhrig Coal and Ore Dressing Appliances, Limited, London, England. Catalogue.
38. The Mine & Smelter Supply Company, Denver, Colorado. Bulletin No. 508 and private communication.
39. The Mine & Smelter Supply Company, Denver, Colorado. Catalogue.
40. The Peter McFarlane & Sons Iron Works Company, Denver, Colorado. Catalogue and private communication.
41. The Risdon Iron Works, San Francisco, California. Catalogue and private communication.
42. The Wellman-Seaver-Morgan Company, Cleveland, Ohio. Circular No. MC-1.
43. Union Iron Works, San Francisco, California. Private communication.
44. Woodbury, George E., of San Francisco, California. Bulletin No. 1 and private communication.

CHAPTER XXXVIII.

AMALGAMATION.

§ 1281. Amalgamation is still the method most used for extracting gold from free-milling ore or placer gravels where the size of gold particles is too coarse for cyanidation and too fine for direct water concentration. There have been few if any changes in the application of mercury for the extraction of gold since the appearance of Ore Dressing. There have been many attempts to perfect the process but little improvement has been accomplished.

§ 1282. THE AMALGAMS. — The question of the nature of amalgams has so much to do with the theory of the amalgamation process that it may be well to add somewhat to what has been said in Vol. II. with reference to amalgams. The more recent research bearing directly upon the nature of gold amalgams seems to indicate that when the percentage of the gold is high, a solid solution of mercury in gold exists isomorphous with the gold.[3] This solid solution may contain as high as 13 atomic percent of mercury, the atomic percent being defined as the number of mercury atoms present in 100 atoms of the alloy. Beyond this, an inter-metallic compound containing gold or mercury in solution, or a second solid solution, is formed which contains 17.5 atomic per cent of mercury. This crystallizes in the hexagonal system and may be simply a solid solution differing from the first. Gold has been found to be practically insoluble in solid mercury and the solubility in liquid mercury at ordinary temperatures is very slight. Silver seems to be similar in its action to gold in the forms separating out from its mercury series. Ordinary gold amalgams consist of one or both of the forms mentioned, usually the first mentioned together with an excess of mercury which coats the particles and causes them to cohere.

§ 1283. AMALGAMATION. — Amalgamation seems to be a physical process. The gold grains are wetted by the mercury, adhere to the mercury film on the plates, and are so caught. This is facilitated by mercury fed to the battery which tends to wet the grains before they come into contact with the plates. The surface tension of the mercury upon the particle holds it on the plate. By diffusion into the plate amalgam often becomes strongly adherent. Silver plating is useful for preventing copper from being dissolved by mercury. Muntz metal has the same effect. Silver-plated plates will, moreover, hold a thicker film of mercury than plain copper plates.

§ 1284. AMALGAMATING PLATES. — The question of amalgamating plates has been quite fully discussed in Vol. II., pages 731 to 746, and the remarks there made apply equally well to the practice of to-day. Denny [4] describes a form of table for supporting amalgamating plates which may be of interest as showing South African practice. This is shown in Figs. 777*a* and *b* in side and end view. The tables are constructed of redwood and are supported on wooden trestles *a* with wedges *b*. The copper plates *s* are flanged at the sides and at the upper end. A vertical wooden down-pipe *c* is attached to the end of each table, leading to a cast-iron mercury trap *U* having a capacity of about

0.85 cubic feet, which is designed to catch any mercury or amalgam which may have escaped from the plates. In recent practice in Western Australia

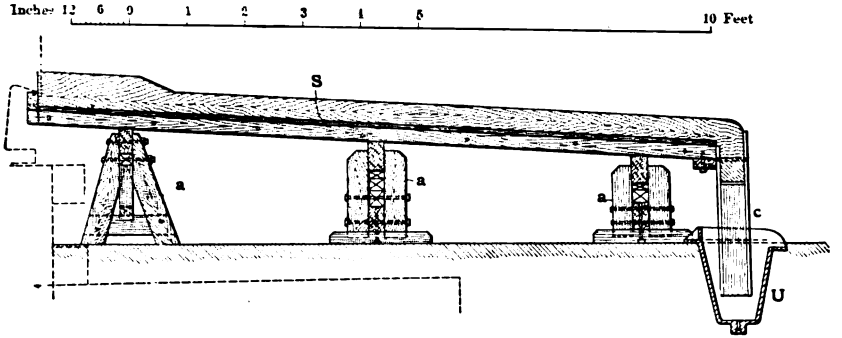

FIG. 777*a*. — LONGITUDINAL SECTION OF COPPER PLATE TABLE.

two amalgamating tables are provided for each 5 stamps with the idea in view of minimizing delays due to dressing and scraping the plates. At the head of the plate a catch box is provided for receiving the pulp as it comes from the mortar. This catch box is provided with an outlet gate for each plate, so that while one is being dressed or scraped the entire pulp may be turned over the other plate, thus avoiding the delays occasioned by having to hang up the stamps.

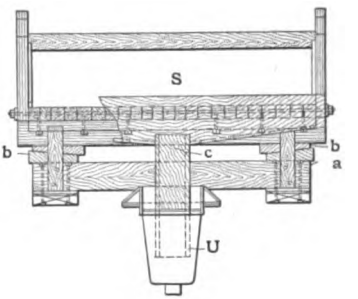

FIG. 777*b*. — END ELEVATION.

Shaking amalgamating tables have been used to some extent in South Africa [4] and elsewhere. One of these tables is shown in Figs. 778*a* and *b*. The pulp from the mortar flows over the shaking table through the launder *a*. The table is lined with amalgamated copper plates and the pulp flows into the catch-box *b* situated at the lower end and on for further treatment. The longitudinal rocking motion is given to the table by means of three connecting rods *c* driven by eccentrics on the shaft *d*, the other ends of these rods being bolted to

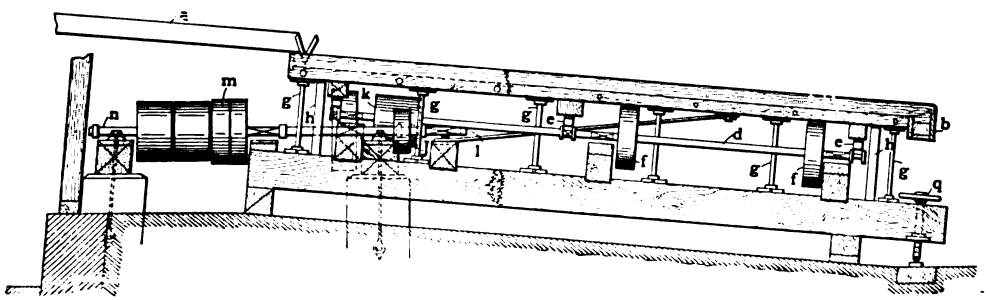

FIG. 778*a*. — ELEVATION. SHAKING AMALGAMATING TABLE.

brackets *e* on the under side of the table framework. Two fly-wheels *f* are keyed on the shaft *d*. The vertical flat steel springs *g* support the table and have

rubber washers at the top and bottom. Brackets *h* are provided to support the table in case of breakdowns of the springs. The shaft *d* is belt driven through pulleys *j* and *k*; and the counter-shaft *l* with tight and loose pulleys *m* is driven from the counter-shaft *n*, and pulley *p*. The necessary slope of the table is regulated by the hand wheel and screw *q*.

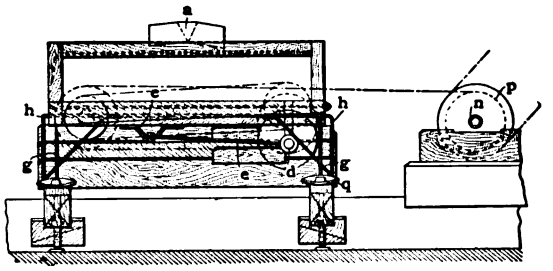

FIG. 778*b*. — END ELEVATION.

Fig. 779 shows a form of amalgamation table preferred in some localities to a plain table. This form of plate interrupts the stream of pulp frequently by back deflectors *a*, thus insuring the contact of all particles with the amalgamating surface. The plates are bent upward at the upper end and laterally, and the corners are made water tight. The plate may be either plain copper or silver-plated. The Fried. Krupp Grusonwerk [6] supply these tables.

§ 1285. PREPARATION OF PULP PREVIOUS TO AMALGAMATION. — J. O. Dimmick [9] has suggested that it would be advantageous to size the pulp before passing it over the amalgamating plates. It is recognized that pulp should be sized before going to a concentrating table in order to secure the highest extraction, because the coarser grains tend to accumulate at the surface of the table, holding the finer particles above them and causing them to be swept

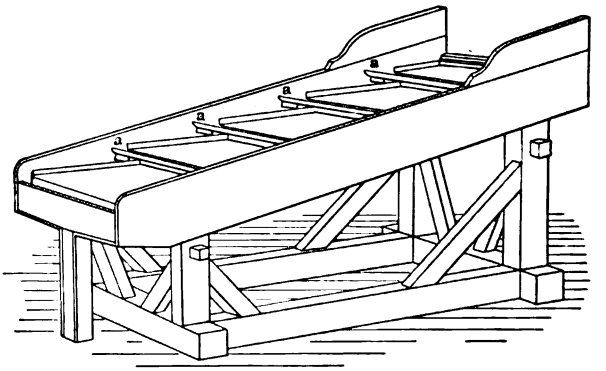

FIG. 779. — AMALGAMATING TABLE WITH BACK DEFLECTORS.

into the tailings. It is contended that the same action holds true on the plates and the finer gold is not given an opportunity to come in contact with the quick. Other advantages claimed for sizing are the partial washing of the pulp and the elimination of the slimes. The fouling and sickening of the plates is due largely to dissolved salts or to ingredients in the finest slimes. A great saving of time and an increase in the efficiency of the plates is gained by a partial or complete removal of these ingredients. The slimes can be sent directly to concentrating tables or to a cyanide plant.

§ 1286. MATERIAL FOR PLATES. — The suitability of various materials for plates has been thoroughly discussed in Vol. II., pages 747 to 751.

§ 1287. ABSORPTION BY PLATES. — Experiments have been conducted by

Thomas T. Read [2] with view to finding the relative absorption of copper plates at different temperatures and the relative absorption of different plates at ordinary temperatures.

For the first test, engravers' plates, having an area of about 4 square inches, were thoroughly amalgamated and submerged in mercury, one at 100° Centigrade and the other at 0° Centigrade. The rates of absorption were obtained by measuring and weighing after the excess mercury had been removed. Curves *A* and *B* in Fig. 780 show the results. Evidently the absorption is not complete even at the end of two weeks. As the temperature increases the mercury absorption increases, consequently causing hardening of the amalgam. This hardening may result only after some weeks' time, but in order to keep the amalgam always of the same consistency the water temperature should be kept constant. In order to obtain the relative absorption rates of plain and silvered copper plates, small pieces of electrolytic copper plates were used, one plain, the other silver-plated. Both were submerged in mercury at a temperature of 20° Centigrade. The results are given in curves *A* and *B*, Fig. 781.

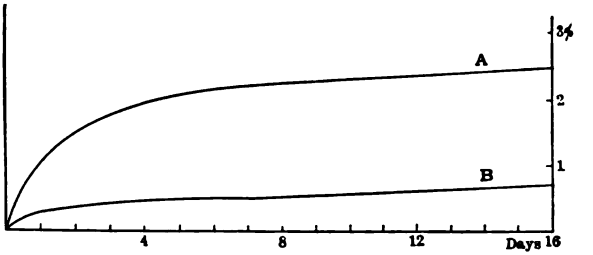

A. Plain copper at 100° C; B. Plain copper at 0° C.

FIG. 780. — ABSORPTION OF MERCURY BY COPPER PLATE.

The chief difficulty of using plain copper plates is the solution of the metallic copper. The copper is easily attacked by oxidizing agents, and the salts which go into solution during crushing coat the plate with a film of copper salts. Even the oxygen in the water produces this effect; and in some ores this is carried so far as to prevent amalgamation. This difficulty is obviated by the use of silver-plated copper plates. The eventual absorption, however, of plain and of silver-plated plates is about the same. By comparing Fig. 780 and Fig. 781 it will be noticed that engravers' plates at 100° Centigrade absorbed much more slowly than the electrolytic at 20° Centigrade, due to the difference in physical structure of the plates.

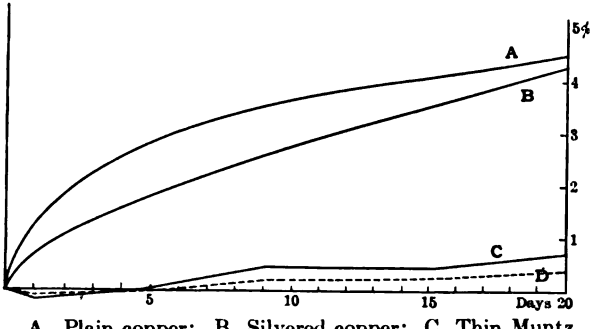

A. Plain copper; B. Silvered copper; C. Thin Muntz metal; D. Thick Muntz metal.

FIG. 781. — ABSORPTION OF MERCURY BY PLATES OF DIFFERENT METALS.

Muntz metal plates [2] have been tried in Australia for battery plates and found very satisfactory, but their use has not spread as yet to the United States. This alloy is composed of about 40% zinc and 60% copper. The advantages claimed for it are that it is cheaper, lasts longer, requires less attention, does not discolor, and that the amalgam is more easily removed than from copper plates. Two plates, one, *C*, measuring 0.0256 inch thick,

and the other, *D*, measuring 0.014 inch thick, were tested in mercury with the idea of measuring the absorption of mercury by the increase in weight of the plates. The negative results at the end of 24 hours are probably due to the zinc being dissolved faster than the mercury is absorbed.

By referring to Fig. 781 it is seen that the mercury absorption is very low. The divergence of the curves shows that the rate of absorption is proportional to the surface exposed, plate *C* having a much larger surface in proportion to its weight. Tests on the mercury seemed to indicate that no copper had been dissolved, showing that no silver plating was necessary. However, in working old dumps (which probably contain copper sulphate), the Munz metal plates coat badly, the small amount of zinc in the mercury producing even more undesirable results than would copper in such cases.

§ 1288. Effect of Temperature on Amalgamation. — Mr. Read from his work concludes that "variations in temperatures make themselves felt in slight changes of a number of factors rather than large changes in any one." Raising the temperature increases the solubility of harmful salts, causing precipitation of base metals into the mercury. Rise of temperature diminishes surface tension and viscosity of the mercury, causing it to become floured. The force with which the gold is drawn beneath the mercury is decreased. On the other hand the wetting of the gold by the mercury is facilitated as is the coalescing of the globules of mercury.

Increased temperature causes added absorption of mercury by the gold and by the plates. Constant temperature should be maintained. A comparatively low temperature is better where soluble salts are to be considered.

At Mill 103[1] the practice of amalgamation conforms to the theory that maximum results are obtained when the temperature of the water used in the batteries is low enough to exert minimum influence on the minerals of the ore and the plate yields seem to show that this is true.

Mercury Traps.

§ 1289. Box Traps. — The Fried. Krupp Grusonwerk[6] manufactures a very efficient form of mercury trap shown in Fig. 782. This trap is intended to collect amalgam and mercury which have been carried along with the discharged pulp from the amalgamating plates. The trap is made of cast iron and fed through a pipe at its center. This pipe is provided at its lower end with a distributor in the form of a hemispherical cup. Owing to the shape of the distributor and of the wall of the trap, the stream of pulp is directed upwards. The amalgam and mercury at the same time fall to the bottom and are collected underneath the distributor. There is an opening provided in the bottom of the vessel, closed with a screw through which the amalgam is discharged periodically. The pulp discharges over the entire periphery into an annular launder. In general these traps are placed after the plates.

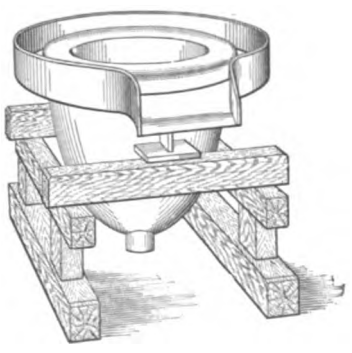

FIG. 782. — BOX TRAP. KRUPP TYPE.

§ 1290. Henry E. Wood,[13] uses a copper-lined feed box on concentrating tables to catch amalgam which the plates and mercury traps have failed to catch. This feed box is about 10 × 16 inches in size. The table motion allows the feed to splash over. Gradually a small ball of amalgam forms which con-

tinues to gather all particles of amalgam which have escaped the traps. When cleaning up, this ball of amalgam can be removed and the contents of the box panned down. Mr. Wood says that on his first clean-up $23 was recovered after running 200 tons of ore. The second clean-up after running about the same amount of ore netted over $40, and this after it had gone through the regular amalgam traps.

AMALGAMATORS.

§ 1291. THE PIERCE GOLD SEPARATOR AND AMALGAMATOR.[10] — This device (see Fig. 783) consists of a sheet-iron box provided with two sets of baffles, an upper set marked *C* and a lower set marked *E*. When gold in a finely divided condition is being treated the lower baffles are made of amalgamated silver-plated copper plates in order that they may act as amalgamating plates. When coarse gold is being treated these baffles may be made of sheet iron. The upper baffles *C* are made of wood or other material, preferably copper, and are placed in the tank in such a way that their lower ends divide the space equally between the lower baffles. The lower ends of these baffles extend down to the surface of the mercury which fills the troughs *D*. When in operation the tank is given a slope of from 9° to 18°.

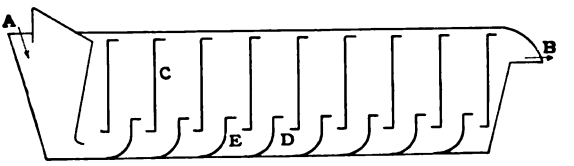

FIG. 783. — LONGITUDINAL SECTION OF PIERCE AMALGAMATOR.

The gold-bearing material fed in at *A* is forced beneath upper baffle *C* and over the lower baffle *E*. The fine gold is caught both on the baffles and in the mercury, while the coarse rusty gold sinks in the mercury. The tailings overflow at *B*.

This amalgamator[11] may be used in the mill, where it replaces the amalgamating plates, or it may be placed after the plates, where it catches any fine or rusty gold not already saved on them. When used in connection with placer mining, the amalgamator is placed after suitable grizzlies and screens. The capacity in either case varies from 5 to 130 tons in 24 hours. It has made great savings when placed after the ordinary plates and mercury traps. The Pierce amalgamator is in use at Mill 103.

§ 1292. PAN-AMALGAMATION. — The pan-amalgamation process for siliceous gold-silver ores has become almost obsolete,[8] but is used at a few places in Montana, Nevada, and Arizona. Large mills are being constructed at Tonopah, Nevada, for handling gold-silver ores by stamps or rolls, followed by concentration and cyaniding of tailings. At Goldfield partly free-milling ores were formerly treated by amalgamation, concentration, and cyaniding. The character of these is now changing so as to require concentration and cyanide treatment.

In general it may be said that the cyanide process either alone or preceded by concentration has displaced pan-amalgamation. This has been brought about partly by reason of change in the character of ores treated, but for the most part by reason of the numerous advantages offered by the cyanide process over pan-amalgamation. The question as to whether concentration shall precede cyanidation is chiefly one of the character of the ore and local conditions. In some cases the proximity of a smelter coupled with low treatment charges and freight rates may, particularly in the case of rich ores, make concentration desirable. In other cases the ore is slimed and cyanided direct.

§ 1293. SQUEEZING AMALGAM. — Amalgam is generally squeezed[5] by hand.

Where large quantities of amalgam are to be treated, this hand squeezing has given way to mechanical means.

The amalgam press, as manufactured by Fried. Krupp Grusonwerk, is shown in Figs. 784*a* and *b*. It consists of a press cylinder in which moves a piston actuated by a screw. The cylinder has holes in the lower end to permit the mercury to escape from the amalgam.

This press is made in two sizes, one to hold 2000 ounces of pressed amalgam, the other 1000 ounces. The description below applies to the larger press.

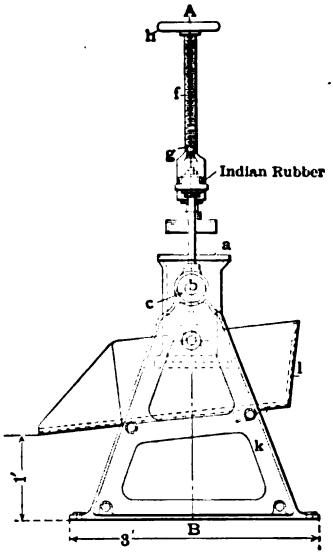

FIG. 784*a*. — FRIED. KRUPP AMALGAM PRESS. SIDE ELEVATION.

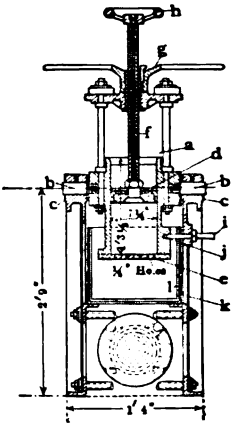

FIG. 784*b*. — TRANSVERSE SECTION ON LINE AB.

The cylinder *a* is open at the upper end, and closed at the lower end by means of a steel plate, containing a number of ¼-inch holes. The cylinder is 7¼ inches in diameter inside measurement and 15½ inches long. Five inches from the top of the cylinder are placed two trunnions *b*, diametrically opposite. They are 2 inches in diameter and rest in bearings *c* on the main frame *k*. The cylinder is capable of rotating on these two horizontal trunnions. In the cylinder there moves the piston *d*, which in turn is attached to the screw *f*. This screw is 1½ inches in diameter, with 5 threads to the inch. It passes through a large bearing *g*, the center of which corresponds with the threads on the screw. This gives it an upper bearing. At the extreme upper end of this screw is a small hand wheel *h*. A small pin *i* fitting into a recess in the frame and cylinder prevents the cylinder from turning on the trunnions while the press is being filled with amalgam. Below the cylinder is a catch basin *l*, fastened to the main frame *k*.

To operate the press, the piston is screwed up by means of the small hand wheel until it is above the cylinder. Amalgam is then placed in the latter, and the piston screwed down. The small pin *i* prevents the cylinder from rotating while it is being filled and spilling the amalgam. As soon as the piston comes within the top of the cylinder, the pin *i* is removed, allowing the workman to tilt the cylinder into the most advantageous position for applying

pressure on the screw. As soon as the excess mercury is pressed out the piston is raised, the cylinder tilted downwards, and the cake of amalgam forced out.

The advantage of the press is the large capacity, which is very necessary in large mills where several hundred ounces of amalgam are to be frequently treated. In most mills, however, the squeezing is done by hand, thus doing away with the cost of the press.

§ 1294. POWER AMALGAM SQUEEZER. — The machine illustrated in Fig. 785 is intended to squeeze the amalgam in the free milling gold mills before retorting it, so as to extract as much quicksilver as possible mechanically. The amalgam is placed in a canvas bag and the bag is then placed in the lower cylinder (1), the sides of which are perforated. The ram is operated by means of a four-way valve (2) shown to the right of the cylinder, which may be operated either by steam, water, or compressed air. This press is manufactured by Chalmers and Williams.[3]

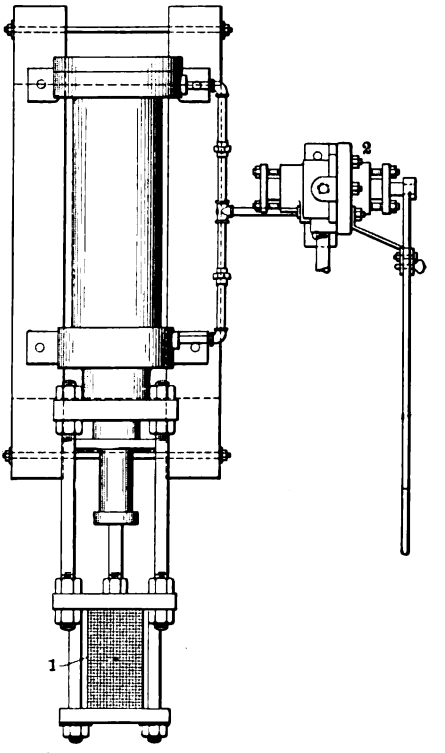

FIG. 785. — POWER AMALGAM PRESS.

§ 1295. SEALING OF RETORTS. — The method of sealing the connection between the cover and the retort during retorting as used by Oscar J. Reynolds [12] is as follows: Cylinder oil is rubbed over the upper edge of the retort, then two or more coils of asbestos packing are placed on the retort as shown in Fig. 786. The oil holds the packing in place, until the cover is screwed down. This means of making an air-tight joint does away with the necessity of mixing up a clay luting and consequently saves time in preparing the retort for the furnace.

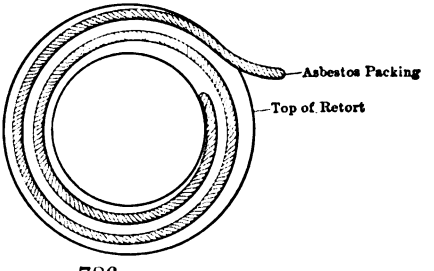

FIG. 786. — METHOD OF SEALING RETORTS.

§ 1296. Descriptions of clean-up devices, retorts, etc., will be found given in detail in Vol. II., page 780 and following.

Bibliography for Amalgamation.

1. *Am. Inst. Min. Eng.* Transactions, Vol. XXXIV., (1904), p. 587. C. W. Merrill. The Metallurgy of the Homestake Ore. Note on effect of temperature on amalgamation.
2. *Ibid.*, Vol. XXXVII., 1906), p. 56. Thomas T. Read. Paper entitled "The Amalgamation of Gold-ores."
3. Chalmers and Williams, Chicago, Illinois. Catalogue No. 1, section C. Description of a horizontal retort and melting furnace, amalgam presses, etc.
4. Denny, George A. "Design and Working of Gold-Milling Equipment with special reference to the Witwatersrand." Excerp minutes of Proceedings of the Institution Civil Engineers. Vol. CLXVI. Session 1905–6, Part IV., London, 1906.
5. Fried. Krupp Grusonwerk, Magdeburg-Buckau, Germany. Catalogue. Description of retorts, clean-up accessories, etc.
6. *Ibid.* Private communication.
7. Lancaster, J. H., New York, N. Y. Private communication, also circular descriptive of Lancaster Gold Amalgamator.
8. *Mineral Resources of the United States*, (1906), p. 130. Notes with regard to pan-amalgamation.
9. *Pacific Miner*, Vol. XI., (1907), p. 21. J. O. Dimmick. "Sizing before Amalgamation."
10. Pierce, Lucius S., Denver, Colorado. Catalogue of the Pierce Amalgamator.
11. *Ibid.* Private communication describing various uses of the Pierce Amalgamator.
12. Reynolds, Oscar J. Helena, Montana. Private communication with regard to the sealing of retorts.
13. Wood, Henry E., Denver, Colorado. Private communication with regard to amalgam trap for concentrating tables.

CHAPTER XXXIX.

MISCELLANEOUS PROCESSES OF SEPARATION.

§ 1297. This chapter contains descriptions of a number of methods of ore separation which have, until within a comparatively few years, been considered more as laboratory methods than commercial possibilities. The rapid advance in the art of ore dressing has, however, placed them on a practical basis, and they have all found application in commercially handling ores on a large and satisfactory scale. The following methods of separation are taken up in this chapter:

Magnetic.
Roasting for Magnetism.
Electrostatic.
Pneumatic.
Adhesion or Flotation.
Crushing and Screening.
Decrepitation and Screening.

Magnetic Concentration.

§ 1298. Principles. — The general principles governing the construction of magnetic separators will be found in Vol. II., pages 790 to 797. Attention should be called, at this point, to the fact that only a direct current can be used in the coils of a magnetic separator to produce magnetism. An alternating current may readily be transformed into a direct current by running a direct-current generator direct connected to an alternating-current motor.

§ 1299. Magnetic Separators. — Magnetic separators may be divided into two main classes:

(1) Separators having the magnetic poles, which bring about the separation, energized directly by the coils of the magnet.

(2) Separators in which the magnetic poles, effecting the separation, are secondary or induced poles.

The latter are energized by the primary poles in the magnetic field of which they lie. The first class will be termed "Primary-Magnet Type," and the second "Secondary or Induction-Magnet Type." Of the first type we have the Wetherill, and of the second the International, Dings, and other separators which will be taken up later.

Separators of the Primary-Magnet Type.

§ 1300. The Wetherill Magnetic Separator. — The Wetherill separator,[50] at present manufactured by the Sterns-Roger Manufacturing Company of Denver, is known as the "Cross-Belt," "Rowand," or "E Type," and is a high-power machine. The principle of its operation is shown [48] in Fig. 787.

The material flows from the holes of the hopper to the feed roller, which discharges it in a uniform layer over the whole width of the conveyor belt, passing between the poles of the magnetic system. The latter consists of two or more horseshoe electromagnets, the poles of which are arranged one above the other. The poles of the upper magnets have the shape of a sharp wedge

while the lower ones are flattened. With this arrangement of the magnets, the paramagnetic or weakly magnetic minerals, when brought into the magnetic field, are influenced in such a manner that at a comparatively small distance from the lower pole the magnetic force of the upper poles, concentrated on the wedge-shaped edges, supersedes that of the lower sufficiently to cause the magnetic particles to jump toward the upper poles as soon as they are brought, by the conveyor belt, into the magnetic field. The cross belts serve to keep the magnetic particles from adhering to the poles and to carry them out of the magnetic field.

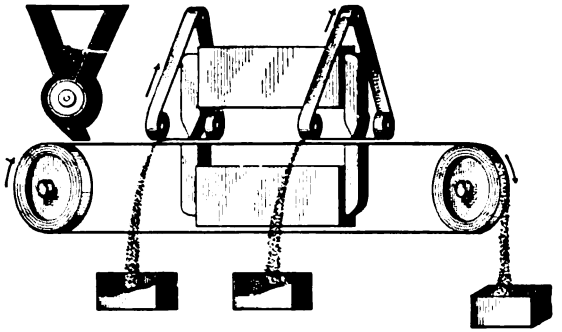

FIG. 787. — PRINCIPLE OF WETHERILL, TYPE "E" SEPARATOR.

This type [50] of machine is constructed with one, two, or three double magnets, giving two, four or six poles, each pair of poles being provided with a rheostat for regulating the current strength. The principal dimensions are given in Table 521.

TABLE 521. — SHOWING THE PRINCIPAL DIMENSIONS OF THE WETHERILL TYPE E MAGNETIC SEPARATORS.

No. of Machine.	No. of Poles.	Magnet Wound for Ampere Turns.			Maximum Amperes at 110 Volts Direct Current.	Floor Space in Feet and Inches.	Height in Feet and Inches.	Weight in Pounds.
E No. 1a	2	30,000	.....	.....	6	5 ft. by 11 ft. 10 in.	8 ft. 6 in.	14,000
E No. 1b	2	60,000	.....	.....	14	5 ft. by 12 ft. 7 in.	8 ft. 6 in.	15,000
E No. 1c	2	100,000	.....	.....	30	5 ft. by 13 ft. 4 in.	8 ft. 6 in.	16,000
E No. 2a	4	30,000	60,000	.....	20	5 ft. by 17 ft. 3 in.	8 ft. 6 in.	22,000
E No. 2b	4	30,000	100,000	.....	36	5 ft. by 18 ft.	8 ft. 6 in.	23,000
E No. 2c	4	60,000	100,000	.....	44	5 ft. by 18 ft. 9 in.	8 ft. 6 in.	24,000
E No. 3	6	30,000	60,000	100,000	50	5 ft. by 23 ft. 4 in.	8 ft. 6 in.	30,000

All the poles are 18 inches wide.

Fig. 788 shows a section across the "E" No. 3 machine.

It has been found to be impossible, owing to the difference in the magnetic attractibility of the same minerals from different localities, to prepare a table of capacities which would answer all conditions. In place of this, certain examples will be given which will give an idea of the kind of work which the machines may be expected to do.

§ 1301. *Capacities on Different Sizes of Grains.*

(A) Machine No. 3, 18-inch belt, treating zinc-lead-iron sulphides from Colorado and removing the zinc-blende (black-jack) as the magnetic product. Machine handling through 14 on 20-mesh material treats 0.75 ton per hour. Machine handling through 60 on 120-mesh material treats 0.35 ton per hour.

(B) Machine No. 3, 18-inch belt, treating Broken Hill tailings in Australia, removing the rhodonite as the first magnetic product, the zinc-blende (black-jack) as the second magnetic product, and leaving the galena with the gangue in the tailings. Machine handling through 10 on 16-mesh material treats 1.25 tons per hour. Machine handling through 50 on 80-mesh material

reats 0.75 ton per hour. The difference in capacity when magnetically removing similar material, *i.e.*, zinc-blende (black-jack), should be noted at this point. The conveyor speed for case *A* is 50 feet per minute for the fine size and 45 feet per minute for the coarse. The conveyor speed for case *B* is 100 feet per minute for the fine size and 75 feet per minute for the coarse.

(C) Machine No. 3, 18-inch belt, treating res from Franklin Furnace, New Jersey, removing the franklinite as the first magnetic product, the silicate of manganese minerals as the second magnetic product, and leaving he zincite, willemite, and calcite as the non-magnetic product. Machine handling hrough 10 on 16-mesh material treats 2.5 ons per hour. Machine handling through 50 on 80-mesh material treats 1.5 tons per hour. The conveyor speed for the coarse size is 100 feet per minute and for the fine size 110 feet per minute.

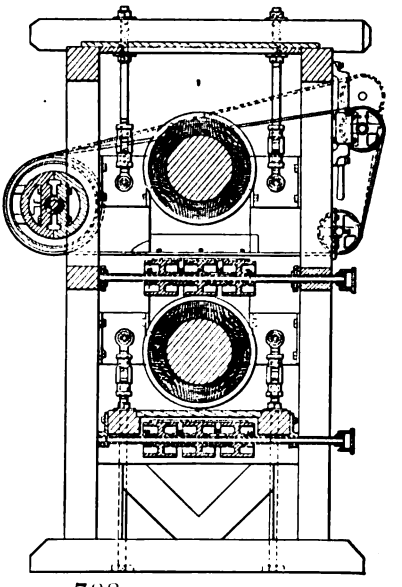

FIG. 788. — CROSS-SECTION WETHERILL TYPE "E" SEPARATOR.

(D) Machine No. 3, 18-inch belt, treating tailings from magnetic separators of Old Bed Ore at Mineville, New York, removing the hornblende as the magnetic product and leaving the apatite as the non-magnetic product. Machine handling through 20 on 40-mesh material treats 3.5 tons per hour. Machine handling through 40-mesh material treats 2.5 tons per hour. The conveyor speed in each case is about 125 feet per minute.

(E) Machine No. 3, 18-inch belt, treating roasted zinc-iron sulphide middlings from wet-mill process, removing the clean roasted pyrite as the first magnetic product, middlings as the second magnetic product, containing over-roasted pyrite and attached particles of pyrite, and zinc-blende, and leaving a non-magnetic product containing zinc-blende and any non-magnetic mineral or gangue in the ore treated. The sizes of ore treated in tests made have been from 0.25 inch down, with the conveyor speed from 100 to 200 feet per minute, treating from 2 to 4 tons per hour.

(F) Machine No. 3, 18-inch belt, treating magnetite ores, will remove 90%, by weight, of the ore treated as the magnetic product. The sizes of ore treated in tests made have been from 0.375 inch down, with the conveyor speed from 500 to 1000 feet per minute, treating at the rate of from 7.5 to 15 tons per hour and using a few cells of dry batteries for exciting the magnets, as the 100-volt current could not be cut low enough with the rheostats.

These last two cases are mentioned to show the extremes between weakly and strongly magnetic minerals.

§ 1302. *Width, Thickness, and Proper Conveyor-Belt Speed.*

(A) The extreme width of belt for treating weakly magnetic ores is 18 inches as shown on the drawings. If a machine is designed for a wider belt, it requires a larger air gap between the upper and lower poles, due to the increased space required between the conveyor belt and the take-off belt to allow the two streams of ore to pass. Consequently the narrower the belt, the less electrical energy required to remove a mineral with the same magnetic attractability; also for strongly magnetic ores the width of the belt could be increased

as the electrical energy required is very low and the inventor has often thought of building them 6 feet wide, using 6-foot pole pieces with 12-inch cores for treating magnetic ores.

(B) The proper thickness of belts when removing only very weakly magnetic minerals is 0.125 inch thick. This is as thin as the makers of belts will guarantee the belt to be of uniform thickness throughout and to run perfectly straight. When removing medium and weakly magnetic minerals 0.25 inch thick gives the best results. When removing highly magnetic minerals 0.375 inch thick, new, gives good results. It has been found in practice that a belt 0.25 inch thick is the best to furnish with the standard machines, as almost every ore treated contains medium magnetic minerals to be removed before the weakly magnetic; and, in a number of cases, the ore to be treated would contain a small percent of strongly magnetic material. In the latter case it is advisable to lower the under pole piece of pole No. 1 and, in some cases, poles Nos. 1 and 2 of the first magnet about 0.125 inch below the conveyor belt, and place a piece of brass, 0.125 inch thick, covering the top of the pole piece, between it and the conveyor belt. This, of course, could be done in treating medium and weakly magnetic minerals by using conveyor belting 0.125 inch thick. If it were not for the additional expense it would always be best to have each magnet on a separate machine, making the belt of the proper thickness for the material to be removed and running the conveyor belt at the proper speed for each, as the more magnetic the material the faster the conveyor should travel to prevent magnetically tangling non-magnetic material with the magnetic material.

(C) Speed of conveyor or feed belts. In cases *A*, *B*, *C*, *D*, *E*, and *F*, it is noticeable that the speeds given vary considerably. Attention is called to the fact that the speed is limited when removing more than one mineral of different magnetic attractability by the least magnetic material. The faster the belt travels the stronger the magnet must be to overcome the momentum, also very weakly magnetic material takes time to be magnetized. Ore has often been seen to pass from the magnet points and then jump back to the take-off belts when the conveyor is traveling at too high a speed. The proper speed for each ore and size treated can only be determined by experimenting.

§ 1303. *Width, Thickness, and Proper Take-off Belt Speed.*

(A) The width for take-off belts is 3 inches.

(B) The proper thickness for take-off belts is $\frac{1}{32}$ inch. The belts are made 13.5 feet long, endless and of uniform thickness.

(C) Speed at which take-off belts should run: — Like the conveyor belt, this can only be determined by experimenting. If these belts are run too fast they will knock the material off that had been attracted to them. It is advisable to run them as slow as they will properly deliver their products, to save the wear on them. When delivering strongly magnetic material they are run about 1,000 feet per minute; on weakly magnetic material about 200 feet per minute; and on medium magnetic material about 500 feet per minute. The speed of these belts is governed by two things: first, the proper speed to get them to discharge clear of the conveyor belt; second, by the quantity of ore they have to deliver.

§ 1304. *The Proper Distance Apart for the Magnets.* — This can only be determined by testing the ore on a machine. The poles should be set as close as possible; that is, so that the stream of ore on the take-off belts does not interfere by wiping the ore off at the conveyor belt, and the strength of the magnet should be regulated by the rheostat controlling the magnet. This is done by all users of the machines. On strongly magnetic ores the distance between poles can be 1.5 inches, on medium magnetic ores the distance between the

poles should not be over one inch, and on weakly magnetic ores not over 0.625 to 0.75 inch. They are often set as low as 0.5 inch. These adjustments govern the size of ore that can be treated on the machine. For the treatment of weakly magnetic ores no size larger than through 10 mesh seems advisable; on medium magnetic ore, nothing larger than 0.25 inch; and for highly magnetic ore, nothing larger than 0.375 inch.

§ 1305. *Electrical and Mechanical Energy Required.* — The following data is for machines Nos. 3, 30, 60, 100, 18-inch belt.

No. 30 magnet takes 6 amperes at 125 volts.

No. 60 magnet takes 14 amperes at 125 volts.

No. 100 magnet takes 30 amperes at 125 volts.

Total, 50 amperes at 125 volts = 6,250 watts = 8.4 horse-power.

Mechanical power to operate the above machines, depending upon the speed at which it is operated, is from 0.5 to 1 horse-power.

§ 1306. *Wear and Tear on the Machines.* — The wear and tear on the machines is practically nothing. Taking the machines that are now in operation in the United States, about 60 in all, it is said that there has not been over $600 spent in repairs upon them; and a number of these machines have been in continuous operation for from five to seven years. This, of course, does not include the cost of the take-off belts. These belts cost from $1 to $2 each, depending upon the quality; and they run from one month to six months, depending upon the size of the ore they are handling. Belts have been known to last a year on the machines treating the fine sizes at Franklin Furnace, New Jersey. These belts are often damaged by coarse ore getting on the feed belt when the magnets are adjusted close. The only wearing part of the machine is the brass shoes on the upper pole pieces where the take-off belt rubs against them. As these wear they should be reversed and, after both sides are worn, should be renewed. The $600 above referred to covers these renewals. At Franklin Furnace, New Jersey, only three conveyor belts have been renewed since starting the mill. The stock of take-off belts should be kept in a damp place.

§ 1307. *Attendance Required.* — At Franklin Furnace, New Jersey, there are two machine tenders and two helpers per shift. There is one tender and one helper on either side of the separator floor, the tenders watching and adjusting the machines and the helpers keeping the floor clean and oiling the bearings. There are at present 25 machines in operation. When the changes are completed there will be 32 machines, 16 on either side of the separator floor, and the attendance will not be increased. At Mill 141 they have eleven machines, with one tender and one helper per shift on the separator floor.

§ 1308. FERRARIS MAGNETIC SEPARATOR. — At Monteponi, Sardinia,[3] there are two forms of magnetic separators in use. The first of these is shown in Figs. 789*a*, *b*, and *c*. This separator has six electromagnets (1) with poles (6) and (7), six leather belts (2) which carry the sized ore into the magnetic field, a large cross-belt (3) against which the magnetic particles are held and conveyed out of the magnetic field onto a large cross-belt (9) which removes the magnetic portion of the ore.

In order to distribute the material to the six electromagnets, it is raised by a bucket elevator (5) and sized by means of waving screens (4) into seven sizes; that is to say, 0 to 0.5; 0.5 to 1; 1 to 1.5; 1.5 to 2.5; 2.5 to 4.5; 4.5 to 6.0; and 6.0 to 10.0 millimeters. The material coarser than 10 millimeters is crushed and returned to the magnetic separator.

The distance between the belt (2), which carries the ore, and the poles of the electromagnet varies from 20 to 40 millimeters. One separator with six electromagnets treats an average of 1 ton per hour and requires 2 horse-power

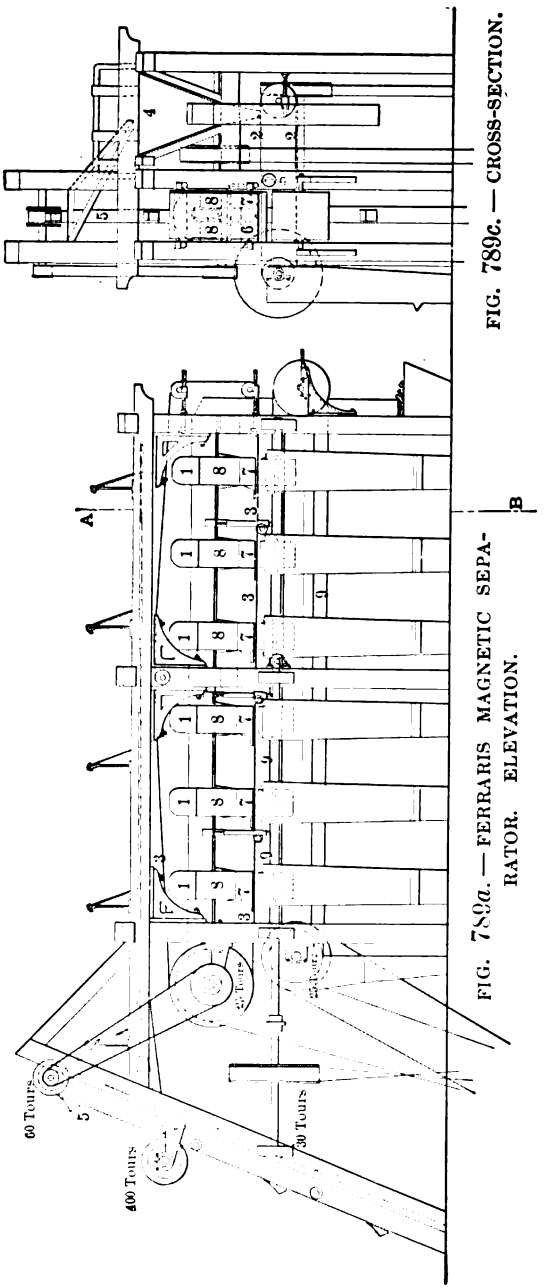

FIG. 789a. — FERRARIS MAGNETIC SEPARATOR. ELEVATION.

FIG. 789c. — CROSS-SECTION.

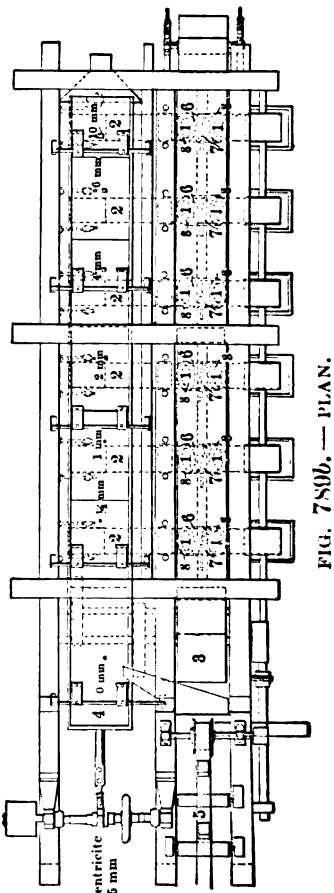

FIG. 789b. — PLAN.

of mechanical energy and 0.88 horse-power of electrical energy for its operation.

After separation from the iron, the zinciferous product is treated on closed jigs to remove the calcined dolomite and the small amount of lead ore which it contains.

In the year 1906 one of these magnetic plants treated 6,373.97 tons of calcined material containing 25.98% of zinc. After separating the iron and washing, a marketable product was obtained of 2,264.12 tons with an average zinc content of 40.87%, representing 55.88% of the zinc in the original calcined

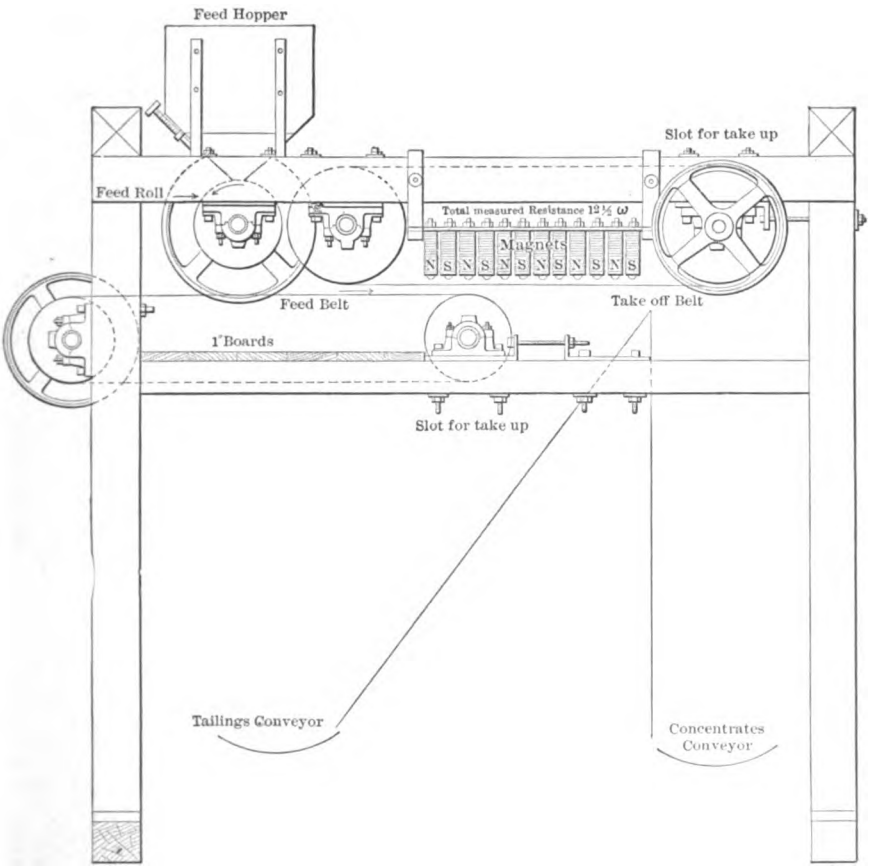

FIG. 790. — BALL-NORTON BELT-TYPE MAGNETIC SEPARATOR.

ore and the removal of 17.31% of iron. The remainder of the zinc values goes into the middlings products, which are set aside, and into the jig tailings. The iron oxide contains 10% of zinc which cannot be removed without resorting to chemical treatment. To enrich still further the valuable calcined calamines, single and portable magnetic separators are used. (See § 1311.)

§ 1309. THE BALL-NORTON MAGNETIC SEPARATOR. — The Ball-Norton Belt-type Magnetic Separator,[38] developed at Mill 158,[19] combines the elements of low cost, capacity, simplicity and uniform effectiveness to a very high degree. The machines (see Fig. 790) were designed for the separation of strongly mag-

netic ores — namely, magnetite from apatite and a siliceous gangue. The amount of phosphorus in the crude ore ranged from 1.35 to 2.25%; while the concentrates ran uniformly below 0.6% in phosphorus and contained from 66 to 67% of iron, as shown by the daily results for a period of two years. At this plant the separators have handled ores as coarse as 0.5 inch, and the average hourly capacity, up to and including all material through a 0.25-inch mesh, was from 20 to 25 tons. On one test four machines put through 144 tons per hour or 36 tons each per hour and gave good results.

The machine is constructed after the Ball-Norton principle;[17] that is, a series of magnetic poles the polarity of which is alternately north and south. The action on ore particles in such a field is to turn the magnetic grains end over end, thus permitting any entrained particles of gangue or non-magnetic material to be dropped.

In operating, the feed hopper is always kept full to maintain a constant supply of ore to the feed roll, which makes from 15 to 20 revolutions per minute, and the depth of feed is regulated by a sliding gate near the feed roll. The feed roll distributes the ore uniformly over the feed belt which carries the ore into the first magnetic field of the series, where the magnetic portion is lifted, striking the take-off belt between the pole pieces of the first and second magnets. A large part of the non-magnetic material drops directly into the tailings; while that portion entrained with the magnetic material is shaken off into the tailings by the sustaining action and changing polarity of the magnets and the forward motion of the take-off belt which also carries the magnetic product forward and away from the tailings. The products may be delivered either into receptacles or onto conveying belts.

The machines now in use have twelve magnets, of uniform strength, controlled by a rheostat. The feed and take-off belts are made of rubber with 3 and 2-ply canvas respectively. Both are riveted with copper rivets on a 6-foot lap. Each part of the separator is easily accessible and burnt-out magnets can be renewed or new belts adjusted in 30 minutes' time. Adjustments are easily made, take-ups being provided for tightening the belts, which may be operated while the machine is running. Since the take-off belt is of the same width and runs faster than the feed belt, the magnetic mass is spread out more thinly per unit of surface. Belt speeds must be determined for each ore, but in general ores of low permeability or large size require slower belt speeds. This separator has a larger capacity than even the Ball-Norton drum type. (See Vol. II., page 797.)

§ 1310. LEIGHTON MAGNETIC SEPARATORS. — The Leighton magnetic separators, manufactured by the United States Metal Reduction Company,[56] are made especially to treat black-sand concentrates and the copper-iron ores occurring in the northwestern part of the United States and in southeastern Alaska. They are designed to handle either wet or dry material. The unique feature in these machines is the vibrator. When the particles of ore enter the magnetic field and move towards the magnet, they encounter a vibration which throws them into a thin layer and breaks up any bunches or clots of magnetic material that might form. Thus the magnetic grains are permitted to travel without mechanical interference from non-magnetic material. This gives all the magnetic grains a chance to be drawn to the magnet, and at the same time prevents entanglement of the non-magnetic grains. Fig. 791 illustrates the principle upon which these separators operate.

§ 1311. FERRARIS DRUM-TYPE SEPARATOR. — One of these drum separators is shown in Fig. 792. As will be observed we have the mild-steel shaft (1) which serves not only as a core for the magnet, but as an axis about which the drum is revolved. The core or shaft (1) has a thin bronze sleeve slipped

over it, and around this are wound the magnet coils (2) in the manner shown in the cut.

The ends of the shaft have a threaded portion over which are screwed the heads (3) and (4). It is now clear that when the magnetic coils are suitably excited, one head, let us say (3), becomes a north pole, while the other (4) becomes a south pole. The magnetic poles (5) and (6) are arranged around the face of the drum as shown in the cut, the north and south poles alternating and being carefully separated by zinc. The poles (5) and (6) are held in their places around the face of the drum by bronze rings (11). The head (3) of the drum has a bronze sleeve (7) which runs in the bearing (10) and through the center of which the terminal wires are led through the ebonite plug (8) into the mercury cups (9), with which are connected the leads (12) and (13). This drum is mounted so that the shaft is horizontal. A conveyor belt is so arranged as to pass over the drum as a pulley, being guided by the bronze rings (11). The material to be treated is fed on the belt and conveyed toward the end where the magnetic drum is located. Upon reaching the end the non-magnetic portion falls off while the magnetic part sticks to the belt and is carried around to the under side where it falls off and so effects a separation. This form of magnet could easily be adapted for use as a cobbing magnet in much the same way as the Cranberry magnet is used. (See § 1314.) This magnet, as used at Monteponi, takes two amperes at 110 volts and treats beween 500 and 600 kilograms of material per hour.

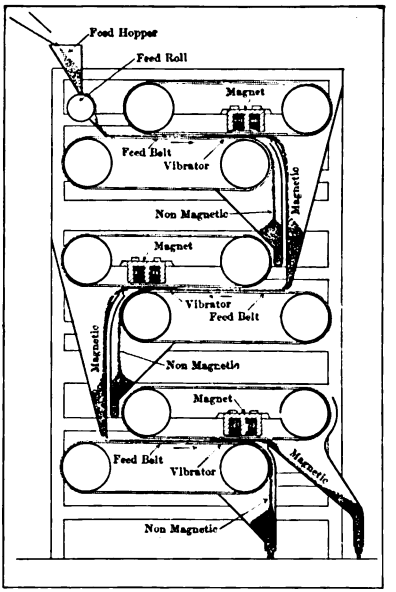

FIG. 791. — SECTIONAL VIEW OF LEIGHTON SEPARATOR.

§ 1312. ERIKSSON'S ELECTROMAGNETIC SEPARATOR. — Eriksson's patent electromagnetic ore separator is a low-power machine, intended for working with wet material. It is made by Fried. Krupp A. G. Grusonwerk.[33] The apparatus shown in Figs. 793*a*, *b*, and *c* contains two pole pieces (1) and (2), which are provided on their periphery with teeth and are fixed on a horizontal shaft at certain distances apart. The teeth of both pole pieces are situated directly opposite each other and terminate in blunt edges. Each of the pole pieces contains a coil (3) which is enclosed by a water-tight box. Between the pole pieces is fixed a narrow separating vessel (4) which is fitted with a hopper-shaped inflow (5) for the pulp, a spitzkasten (6) provided with adjustable discharging slides and overflow for the waste, and a discharging channel (7) for

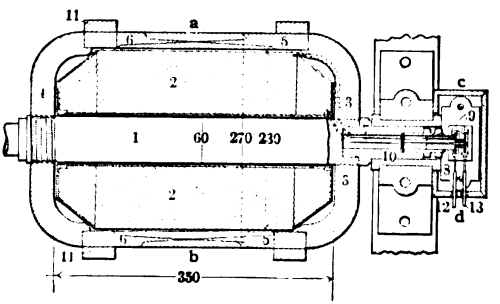

FIG. 792. — FERRARIS DRUM-TYPE SEPARATOR.

the concentrated ore. The hubs of the pole pieces are extended outwardly and each carries two collecting rings for the supply and transmission of electrical current. The shaft is mounted upon a wooden frame, to which the brush holders and the separating vessel are also fixed. The apparatus is driven directly by pulley.

The ores are concentrated, between the two revolving pole pieces, in the separating vessel, which is filled with water up to about the height of the shaft.

When the pole pieces are excited by the magnet coils, the magnetic lines of force become concentrated between the edges of the pole pieces and form magnetic fields which completely traverse the separating vessel (4).

If the pulp is fed through the inflow (5) into the separating vessel (4), the magnetic material remains adherent between the poles and forms "bridges"

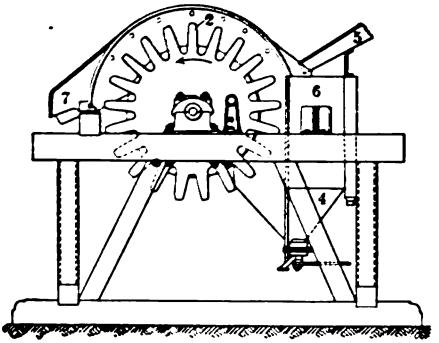

FIG. 793*a*. — ERIKSSON'S MAGNETIC SEPARATOR. ELEVATION.

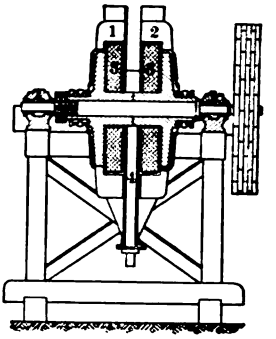

FIG. 793*c*. — SECTION.

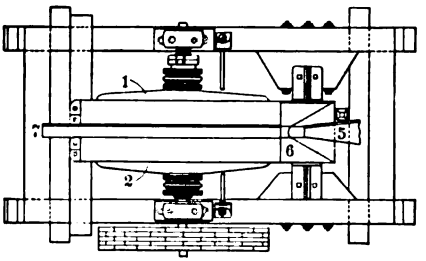

FIG. 793*b*. — PLAN.

in the vessel (4). During the rotation of the pole these "bridges" are carried through the water and finally pass, while freely suspended in the air, to the collecting channel (7), where they are discharged under the action of strong jets of water. The non-magnetic material sinks slowly to the bottom of the receptacle and flows away through (4) to the waste outlet. The water level in the receptacle is regulated by a slide at the overflow.

The magnetic material, during its movements, is completely separated from the gangue by the water.

§ 1313. HUMBOLDT SEPARATORS. — The Humboldt Engineering Works Company[30] manufactures magnetic separators of a number of different forms suited for separating either strongly or weakly magnetic minerals. The Humboldt Company also manufactures the Wetherill magnetic separator.

§ 1314. CRANBERRY MAGNET. — At Mill 156[31] an interesting magnetic separator is employed in the concentration of magnetic iron ore. This magnet is

especially designed for wet work and may be used as a cobbing magnet. As will be seen upon examining the cut (Fig. 794), the machine consists of a cylindrical drum revolving upon a horizontal axis. This drum is made up of the following parts: (1) shaft; (2) magnet core; (3) magnet body; (4) zinc distance-pieces or rings; (5) a gutta-percha ball pierced to make a water-tight joint for terminal wires; (6) cast-iron sleeves making a water-tight joint; (7) brass rings; and *AA'*, *BB'*, *CC'*, *DD'*, and *EE'* steel rings constituting magnetic poles. The coils are wound in the spaces between the distance-rings (4) and the magnet body (3), one coil being wound in one direction, the next in the opposite and so on, thus making the steel ring-poles *AA'*, *BB'*, etc., successively north and south magnetic poles. The space between the distance-rings and the periphery of the drum is filled with Portland cement, thus making the drum absolutely water-tight. All the parts are securely bolted together as shown in the illustration, and each coil is separately connected to terminal bolts at one end, for purposes of testing in case a coil burns out.

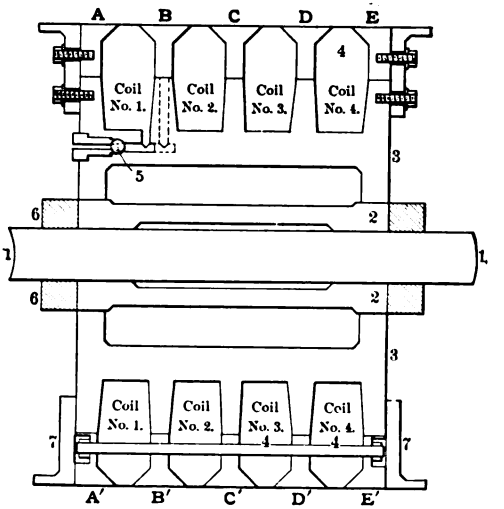

FIG. 794. — CRANBERRY DRUM-TYPE MAGNET.

The material is brought into the magnetic field by means of a belt, when running dry, and may be carried off by a belt running on the drum itself at right angles to the conveyor belt. When running wet the magnetic drum works in a box; the water which washes the material into the box washing away the tailings while the concentrates are removed by a belt passing over the drum. This form of magnet has done very satisfactory work at Mill 156.

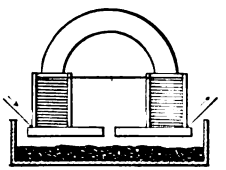

FIG. 795*a*. — COBBING MAGNET AT MILL OF MANHATTAN ASBESTOS COMPANY.

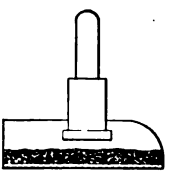

FIG. 795*b*. — SIDE ELEVATION.

§ 1315. COBBING MAGNETS. — Cobbing magnets are used to remove from the crude ore bolts, nails, pick points, hammer heads, and so forth before the ore passes to rolls or other fine crushers. The material that has been attracted to the magnet is usually pulled off by hand whenever it has accumulated so as to make this necessary. In some cases it may be necessary to shut off the current, but this is not usually required.

§ 1316. *Manhattan Asbestos Company Magnet.* — In the mill of the Manhattan Asbestos Company [12] a strong electromagnet (see Figs. 795*a* and *b*) is

placed over the discharge end of a feeder, after the rock passes the Blake breaker and corrugated rolls. Its use is to remove iron particles and its construction is apparent from the cut.

§ 1317. *Broughton Asbestos Company Magnet.* — In the mill of the Broughton Asbestos Company [12] six magnets are placed over the shaking screen which receives the first crushed material from the jaw breakers. Figs. 796*a* and *b*

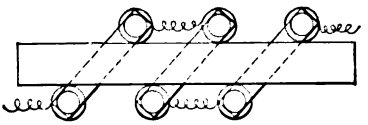

FIG. 796*a*. — COBBING MAGNET AT BROUGHTON ASBESTOS COMPANY'S MILL.

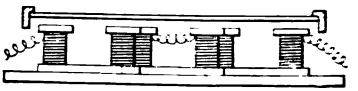

FIG. 796*b*. — SIDE ELEVATION.

show the arrangement of these six magnets, the only purpose of which is to remove iron particles and thus save wear and tear on the later machines.

§ 1318. *The Eastwood Improved Lifting Magnet*, manufactured by the Electric Controller & Supply Company,[53] designed especially for the lifting of heavy castings, ingots, etc., finds an interesting application as a cobbing magnet. Fig. 797 shows the construction of the magnet itself. In this cut it will be noted that the central pole is apparently carried away from the load, that is to say, it is located well above the outer annular pole. This may appear peculiar, but the idea underlying the design is to produce such a dense and well-directed magnetic flux that the material to be lifted shall be sucked up against the poles of the magnet. In actual service an 80-pound pig of iron will jump vertically from 4 to 6 inches in order to attach itself to the center pole. One of these magnets, of the type shown in the cut, has been employed by Mr. Wethey at Mill 164 for the removal of iron from ore going to the breakers. This magnet is suspended over the ore trough by means of studs screwed into the eye-bolt holes. Mr. Wethey has installed in this magnet a center pole-shoe cutting the air gap down from 11 inches to 1 inch. This gives an extremely strong field across the 1-inch gap, but the field does not extend through any considerable depth of ore, probably not deeper than 2 or 2.5 inches. In using one of these magnets in this way the air gap should be proportional to the speed and depth of the ore stream, in all cases retaining a very strong field.

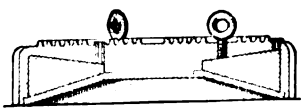

FIG. 797. — EASTWOOD LIFTING MAGNET.

§ 1319. *Bilharz Cobbing Magnet.*[9] — At Mill 126 a cobbing magnet is used to remove hammer heads, pick points, etc., from the ore before it goes to the fine-crushing department of the mill. The ore, after passing through the coarse-crushing department, is brought by a long conveyor up into the mill. Just at the top of the conveyor where the layer of ore on the belt begins to loosen up before falling over the end of the belt, the cobbing magnet is hung.

This magnet, shown in Figs. 798*a* and *b*, consists of two cores (1) and (2) with windings (3) and (4) respectively, connected in series, a wrought-iron yoke (5), and pole pieces (6) and (7) separated by a strip of zinc (8). A 240-volt direct-current is employed and approximately 2.3 amperes are necessary to properly excite the magnet coils. This device has done extremely satisfactory work.

SEPARATORS OF THE SECONDARY OR INDUCED-MAGNET TYPE.

§ 1320. THE INTERNATIONAL SEPARATOR.[10] — The International separator, a high-power machine, typical of this class, is made by the International Separator Company [37] and consists, in brief, of a cylindrical secondary magnet, hereafter called the armature, mounted upon a steel shaft and revolving horizontally between the poles of a large inverted horseshoe magnet.

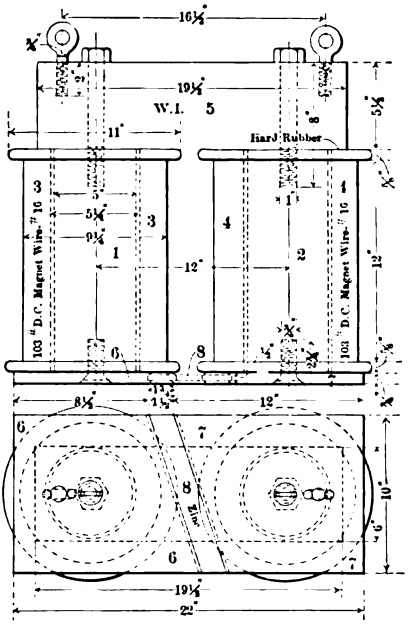

FIG. 798*a*. — BILHARZ COBBING MAGNET. ELEVATION.
FIG. 798*b*. — PLAN.

The armature is made up of thin laminated discs, of a special annealed wrought iron painted with shellac, which are pressed tightly together and securely held by heavy cheek plates screwed on at either end. The type *C* separator, designed to treat minerals of high permeability, has these discs so cut and placed on the shaft as to give a slotted appearance horizontally on the armature, the slots being partly filled with wood to give a fairly smooth surface. In the type *E* separator, for handling minerals of low permeability, the edge of each disc is toothed and, in assembling, the teeth on adjacent discs are so staggered that the surface of the finished armature presents a great number of small steel points as shown in Fig. 800. In operation the armature is revolved by a belt and pulley on the end of shafting (8).

On the massive cast-iron base (1) (see Fig. 799) rest the exciting coils (2) which surround the soft-steel cores (not shown): the cores being securely held down on the base (1). Resting on the cores are the massive pole pieces, *N* and *S*, which are securely bolted to the cores by stud bolts (3). The armature (9) rotating between the two pole pieces receives an induced magnetism and becomes the secondary and separating magnet, although receiving no direct electrical energy itself. At positions *N* and *S* the magnetism is the strongest, and it is the weakest at positions *a* and *b*, where the magnetism of the armature is constantly changing its polarity as it revolves.

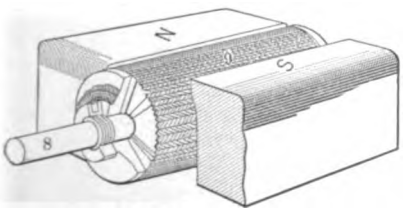

FIG. 800. — ARMATURE OF INTERNATIONAL SEPARATOR.

Material to be separated is fed from the brass hopper (4), which is securely bolted to the pole pieces and should always be kept full to give a uniformly constant feed, through the adjustable brass gate and lip (5) on the top of the revolving armature (9), striking it at a point *b* where there is little or no magnetism. Sometimes a brass roller feeder is placed between the gate (5) and the armature (9), giving a more even distribution over the armature surface. The armature (9), making 75 to 100 revolutions per minute, carries the material around to *N*, the magnetism constantly getting stronger and reaching its maximum strength at this point. Here another force

is met with — centrifugal force — which assists gravity in throwing off the non-magnetic material, while the magnetic grains cling to the armature until a combination of gradually weakening magnetism, centrifugal force, and gravity releases them, all the material coming off somewhere between *N* and *a*, at which point the polarity changes from north to south. At *a*, the point of reversal, there is no magnetism whatever, and even the most strongly magnetic grains

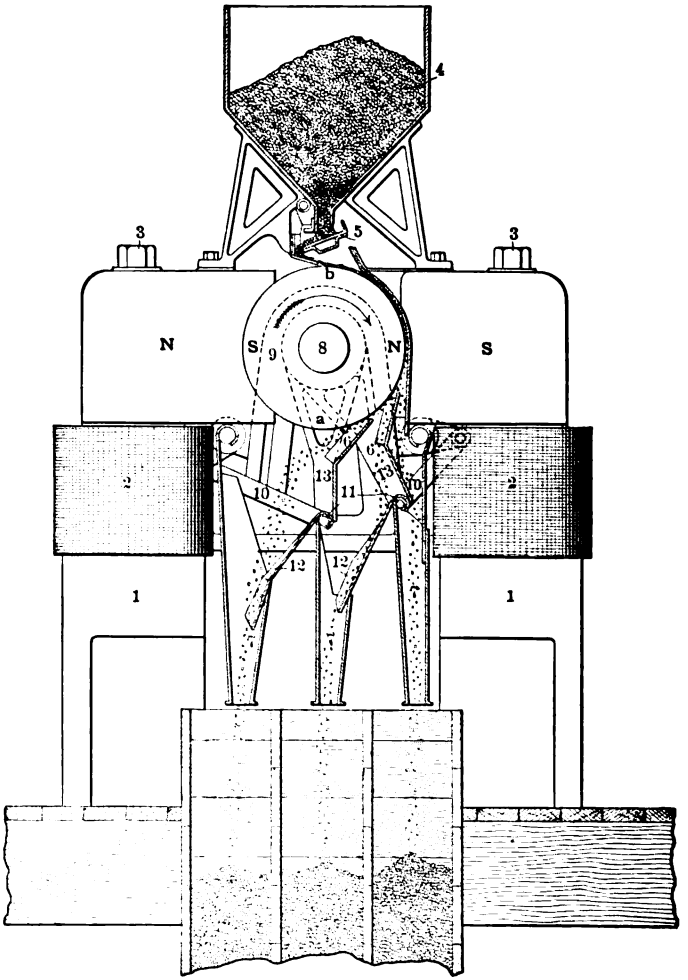

FIG. 799. — THE INTERNATIONAL SEPARATOR.

drop off. Long, narrow, brass hoppers (7) with adjustable brass cutting-shields (6) are supported under the armature from the shaft bearings by brass stirrups (13). These cutting shields (6) may be moved to take different products as desired from the under surface of the armature as the products successively drop off under the gradually weakening magnetic attraction. In this way several different minerals can be separated in one operation. The position of each cutting shield is controlled by links (10) mounted on brass shafts (11) extending across the separator and holding the brass aprons (12) as shown in the cut.

These shafts are provided with set screws for locking the cutting shields in any desired position.

A standard machine weighs 10,000 pounds, is 3 feet 2 inches wide by 3 feet 9 inches long and 5 feet high. In operation, one horse-power is used for excitation and one horse-power for mechanical operation. The capacity of a single machine is from 2 to 4 tons per hour, depending on the character of the ore and the thoroughness of its preparation for separation. As more than one machine is usually necessary to effect a commercial separation, the capacity per machine in operation would be less than this.

In a magnetic separator,[48] the heavier the primary magnets the less electricity is required to give the secondary magnet the required attracting strength. The field magnets of this separator weigh 9,000 pounds, this weight being distributed between the copper wire and the soft-steel field magnets so as to get the best possible results. As it takes a great deal of electricity to make the magnetic lines of force pass through the air, the pole pieces are brought up as close to the armature as possible. Just sufficient room is left to allow the material fed to pass between the armature and the pole piece. The magnetism is much more concentrated on the points of the armature than upon the face of the pole piece, as an attractable particle, even when put on the bare steel face of the pole piece, jumps across to one of the points on the armature. Eighteen of these machines are in use at the Leadville mill of the American Zinc Extraction Company, making a separation of pyrite, sphalerite, and pyrrhotite, treated raw. Here on a 20% zinc ore the hourly capacity of a machine is 2.5 tons, and 3 tons per hour on a 30% ore. The ore fed to the separators in this mill is reduced, dry, to pass a 0.043-inch screen aperture. The 18 machines, with a 250-volt current, use 64 amperes for exciting the coils, or less than a kilowatt per machine. One horse-power per machine is ample for rotating the armature, a 30 horse-power motor driving the 18 machines and shafting.

These separators are also in use at Mill 138 where they are giving entire satisfaction. They will be installed in Mill 139 when the zinc-separating department of that mill is erected.

§ 1321. Ullrich Magnetic Separator. — In the Australian Metal Company's Mill at Broken Hill, New South Wales, Australia [7], [41] a magnetic separator of high power, invented by the mill manager, Mr. Ullrich, is in use.[4] These machines have powerful electromagnets of wedge-shaped section. Two of the magnets are set up with the sharp edges horizontal and a roller between them, the latter being a hollow brass cylinder revolving at about 50 revolutions per minute according to the material under treatment. On this roller are placed alternately rings of iron, each ring having a rectangular section, and brass, zinc, or some non-magnetic material. These are clamped together by means of a brass nut forming a cylinder about 3 feet in length, the rings being each approximately 0.25 inch in width. Each machine contains four rolls, two above on the same axis but divided by a central bearing, and two below similarly separated. The ore, fed in a steady stream through a hopper, falls on the roll, which is a secondary magnet having an induced charge and is subjected to the magnetic treatment. On the first rolls the garnets and rhodonite are removed, thence the residue passes to the lower rolls where the sphalerite is removed, leaving galena and quartz in the tailings which are later separated by a wet process. Each separator is said to require 1.5 horse-power of electrical energy, and the entire plant, consisting of 8 separators, turns out 200 tons per day. Fig. 801 gives an idea of the construction and method of operation. As will be observed it resembles the International magnetic separator in many respects.

§ 1322. Mechernich Magnetic Separator.[4] — This is one of the separa-

[illegible] having a very strong field and is constructed something after the manner of the International magnetic separator. An outline of the latest design[6] is given in Fig. 802 where the pole piece N rests on the base frames (1) and surmounting the two soft-steel cores (not shown) are the exciting coils (2) which are supported by the pole piece S. The motor armature (4) revolving horizontally between the inclined poles N and S is supported by brackets (3) which are bolted securely to the pole piece N. Pole piece N, solidly connected with the soft-steel cores (not shown), is supported on the heavy hand-wheel adjustment screws (5) by means of which the distance between the pole piece S and the armature (4), through which the ore is fed by a hopper (not shown), is easily adjustable. Adjustable cutting shields are employed to intercept the ore stream under the armature at any point desired and the products are caught and conveyed away by hoppers (6). The construction of the armature differs slightly in the different types of machines, but each is a motor as well as a secondary or induced magnet, and is run by having the electrical current brought directly to it through brushes or fingers. The separation is effected as in the case of the International magnetic separator, and the statements given in the description of that machine apply with equal force to this one, as the principle is almost exactly the same.

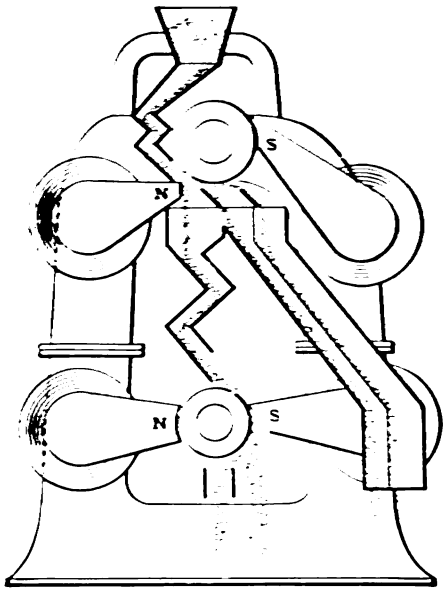

FIG. 801. — ULLRICH SEPARATOR.

Controlling rheostats in the field and armature circuits admit of a large variation in the intensity of the field or speed of the armature, to suit the nature of the ore under treatment.

The success of the machine depends upon good sizing and a regular feed. In order to secure the latter each feed hopper receives an intermittent motion by means of a pulsatory dynamo supplying current to electromagnets. The resulting vibrating motion imparted to the hopper causes a very regular thin stream of ore to pass beneath the armature of the separator.

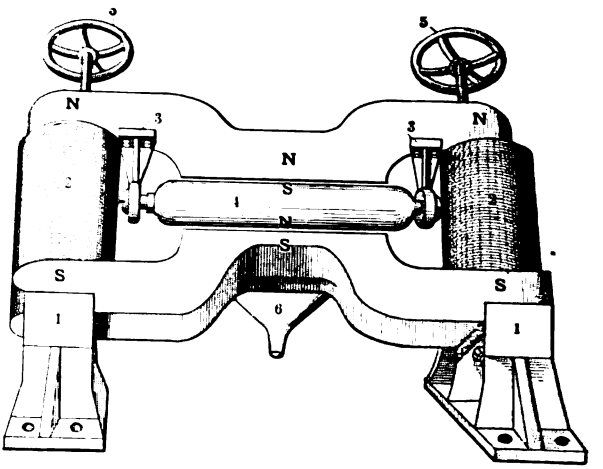

FIG. 802. — MECHERNICH-MAGNETIC SEPARATOR.

This machine has found a successful application in Mill 135 where 26 machines

are employed in treating the weathered galena-sphalerite tailings from the old wet-mill of the Central Mine, Broken Hill, New South Wales, Australia. The separator is also in use in the United States and is supposed to be doing satisfactory work.

§ 1323. THE GRÖNDAL NO. 2 SEPARATOR.[2] — A few years [11] after the invention of his first separator (see Vol. II., page 804), G. Gröndal brought out his second type. This machine has a fixed electromagnet consisting of two semicircular discs of soft iron 2.375 inches apart [25] attached to a vertical shaft. Between these discs the magnet coil is inserted. Around the magnet there rotates a bell-shaped sheath of brass, in the outer surface of which a number of iron plates are cast. When these thin plates or lamels, as they are called, enter the magnetic field they become strongly magnetic with an induced charge, and remain so as long as they are in the near neighborhood of the magnetic discs, *i.e.*, during half a revolution; then they quickly lose their magnetism.

The pulp to be treated is fed to the upper part of the bell at the point where it begins, in its rotation, to pass the electromagnets. The magnetic particles are attracted to the iron lamels while the non-magnetic particles are washed off. When the lamels lose their magnetism the concentrates are washed off and easily removed. About the same current is required for this separator as for the No. 1, *i.e.*, 6 amperes at 31 volts; but less power. The machine came into quite general use soon after its introduction and is found in use to-day.

§ 1324. GRÖNDAL NO. 3. — This type of separator has a fixed electromagnet with hatchet-shaped pole pieces around which brass drums revolve at a speed of 80 revolutions per minute. As in the No. 2, iron lamels are inserted in the brass. These lamels are alternately magnetic and non-magnetic as, during the rotation of the drum, they pass through or outside the magnetic field. The magnetic separation, as well as the removal of the concentrates, is thus effected. The feed does not come directly upon the drum, but is brought into the field of the magnet in a weir box under it. Generally two of these separators are combined in a twin machine requiring 2 horse-power and 3.5 amperes at 110 volts for running. This machine has been operated at only a few plants, since it was followed immediately by a new type, the Gröndal No. 4.

§ 1325. GRÖNDAL NO. 4. — At all the plants trouble had been experienced by reason of the amount of water in the concentrates produced. To eliminate this, Gröndal constructed the No. 4 type in which the revolving drum of the No. 3 type was replaced by a horizontal brass disc making 1450 revolutions per minute under a fixed electromagnet, and throwing off the concentrates by centrifugal force. The machine was used at a number of plants very satisfactorily, but the excessive wear upon the disc soon caused it to give way to a fifth type.

§ 1326. GRÖNDAL NO. 5. — This separator [2] is either already installed or contemplated in a great number of new Swedish plants. In Fig. 803 a horizontally rotating brass drum (1), has within it a system of electromagnets (2), of alternating polarity somewhat resembling that of the Monarch separator (see Vol. II., page 797), windings (2), cores (3), and pole pieces (4). The pulp is fed into a weir box in the same way as was done in types Nos. 3 and 4. The magnetic particles are drawn out of the water and against the drum and, with a tumbling action, due to the constantly changing polarity, are carried past the magnets. As soon as the magnetic grains are out of the magnetic field they are washed off by water. The weir box is so arranged as to permit of the removal of tailings at (5), middlings at (6), and slimes at (7). The power required is one horse-power or 4 to 5 amperes at 110 volts. When treating ore from Herräng, Sweden, this machine has a capacity of 100 tons per 24 hours.[25]

§ 1327. FORSGREN'S ELECTROMAGNETIC SEPARATOR. — Forsgren's patent electromagnetic separator, made by Fried. Krupp A. G. Grusonwerk,[23] is constructed for the wet process and especially adapted for the magnetic concentration of fines. These machines separate the raw material, during one single passage, into three products, namely, a non-magnetic, a slightly magnetic, and a highly magnetic product. Fines and material up to 1.375 inches in size yield, after the first separation, a directly workable product as concentrates, an intermediate product as middlings, and a clean gangue as tailings. Various sized grains of an ore, or several kinds of ore, may be simultaneously concentrated in the apparatus according to the number of electromagnets.

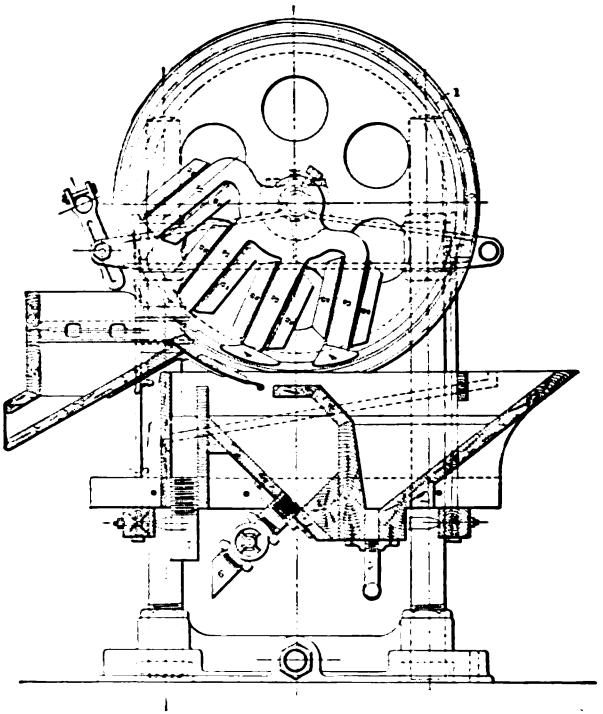

FIG. 803. — NO. 5 GRÖNDAL SEPARATOR.

The machines are constructed according to the output required, with two or more horseshoe electromagnets (primary magnets). Figs. 804*a*, *b*, and *c* represent the separator with four electromagnets (1), (2), (3), and (4) having cores (21), windings (22), and poles (23). Each magnet is excited by a coil, which is enclosed in a water-tight box. The winding and electric coupling of the coil depend upon the nature of the ore and the current tension at hand. Between the magnet poles a large number of peculiarly-shaped iron blocks (5) are arranged in two concentric rings (6) and (7). These constitute secondary magnets. The iron blocks of each ring are insulated with cement (8), and terminate in oblique blunt edges (9), which are exactly opposite to each other at the slit formed by the space between the concentric rings. The rings are provided with a metallic mounting, by which they are connected together, and with a spider (11) fastened to a vertical shaft. The spider rotates on the ball bearing (12) of a wheel-shaped traverse (13), which is supported by the inner

pole pieces of the electromagnets. The machine is driven by two bevel gears (14) and (15), one of which (15) is keyed to the lower end of the vertical shaft, while the other is fixed on a horizontal shaft (16), which is mounted in one of the electromagnets and provided with tight and loose pulleys (17).

When the electromagnets are excited the magnetic lines of force become concentrated between the secondary poles which are located between the electromagnets during the revolution of the rings.

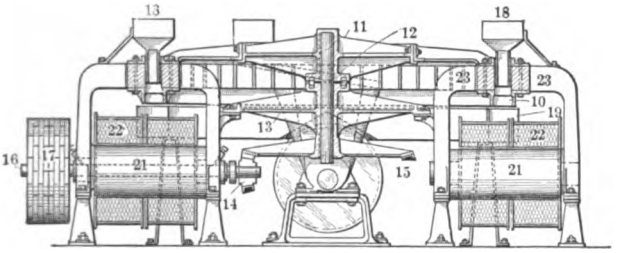

FIG. 804*b*. — CROSS-SECTION.

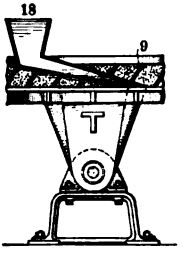

FIG. 804*c*. — SECTION SHOWING SECONDARY POLES.

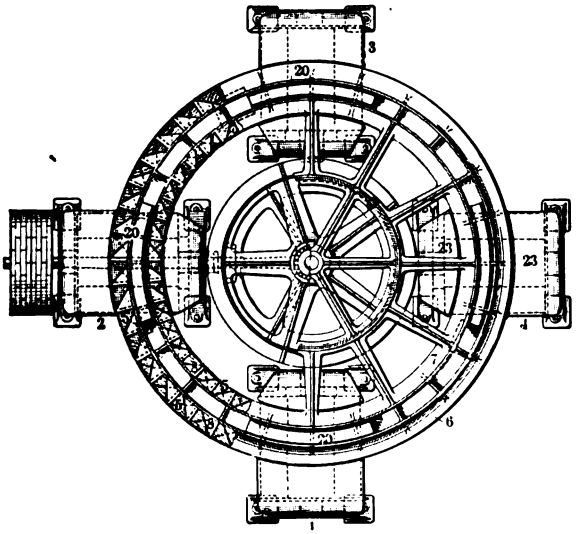

FIG. 804*a*. — FORSGEN'S MAGNETIC SEPARATOR. PLAN.

If a mixture of magnetic and non-magnetic material is fed through one of the four hoppers (18) between the primary poles, the non-magnetic material falls immediately into the openings (20) while the magnetic material follows the secondary poles. Since the attractive force of the induced poles decreases as they recede from the reach of the electromagnet during the revolution of the pole rings, the slightly magnetic material (middlings) falls first of all, and then the highly magnetic material. Thus the three products may be separately collected in, and discharged from a launder (19) located beneath the pole rings and provided with suitable compartments and slides. About one horse-power is required for operating, while the output of the machine such as is shown in the cuts is approximately 8 tons per hour.

§ 1328. DINGS MAGNETIC SEPARATOR. — The Dings magnetic separator type "MM," made by the Dings Electro-magnetic Separator Company,[14] is designed especially for treating ores and minerals susceptible to treatment by a low-power magnet.[58] The double-magnet machine is capable of making five products in one operation, the products consisting of non-magnetic concentrates and four grades of magnetic products ranging from the most strongly magnetic to the most weakly magnetic.

Referring to Fig. 805 the ore is fed from the hopper *A* upon a vibrating conveyor *B*, over which it passes in a thin layer through four zones of separation. These zones of separation are covered by the rims of rotating wheels *CC*, carrying secondary magnets *DDDD*. These magnets attract and carry away the magnetic material and discharge it over the sides of the conveyor into spouts *EE* for final delivery. The secondary magnets are saturated by the pole pieces

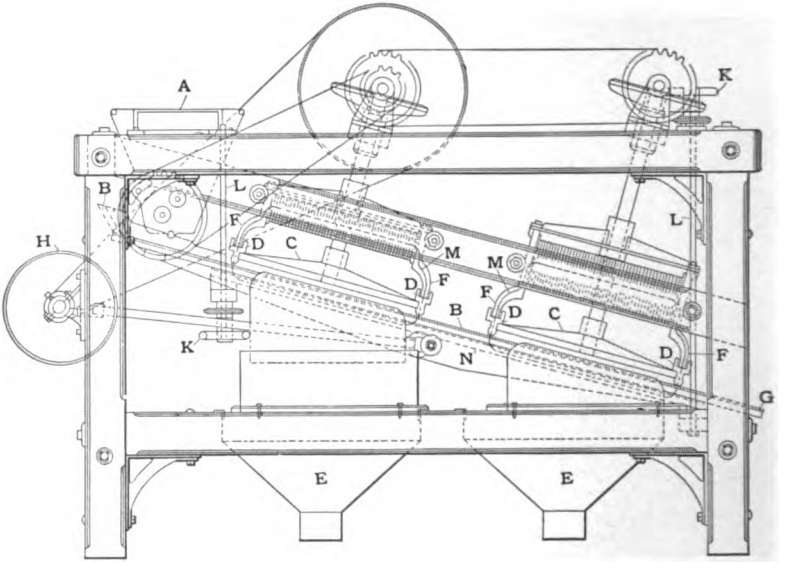

FIG. 805. — DINGS MAGNETIC SEPARATOR.

FFFF of powerful primary electromagnets, while over the conveyor; but are automatically demagnetized as they pass out of the magnetic circuit to the neutral position, where the rims of the wheels overhang the conveyor. The non-magnetic concentrates pass off to final delivery at *G*, the lower end of the conveyor. The spouts *EE* can be provided with longitudinal partitions so as to deliver the products of each field separately.

This separator has no electrical sliding contacts. The magnet coils are stationary and have solid connection with the main tension line. As the magnetic mineral is lifted and carried away without the magnets coming into direct contact with the mixed ore, there is but slight chance of losing concentrates by reason of mechanical entanglement.

The secondary magnets are made of laminated electric steel. The upper part *DDDD* of these magnets is made U-shape, and when in position for service the U closely embraces the lips of the primary pole pieces, thus presenting a sure area of surface between the primary and secondary magnets and reducing the magnetic resistance at this point to a minimum. The secondary mag-

nets are supported by a heavy bronze carrier wheel to which they are solidly attached. As the secondary magnets, traveling in a circle, pass from one field to the other, they reach points between the two primary poles where they lose their magnetic saturation, are neutralized, and reversed as to polarity, thus effecting a perfect and natural discharge on both sides of the conveyor and producing four grades of magnetic mineral.

The conveyor of this machine is 18 inches wide and in some of the later types is supported on toggles for smooth action. Some of the separators are handling 20 tons of 0.125-inch stuff per day. Less than one horse-power is required and from 0.25 to 2 kilowatts of electrical energy is used for energizing the magnets. A number of these separators have been installed at Mill 114 and are giving satisfaction. These machines are built in two sizes as shown in Table 522.

TABLE 522. — WEIGHT, DIMENSIONS, AND POWER REQUIRED FOR THE DINGS MAGNETIC SEPARATOR.

	Single Magnet.	Double Magnet.
Weight net	1,400 pounds.	3,200 pounds.
" boxed for shipment	1,700 "	3,600 "
Dimensions, width	36 inches.	47 inches.
" length	72 "	120 "
" height to top of hopper	44 "	66 "
Mechanical power required	0.5 horse-power.	1 horse-power.
Maximum electrical power required	450 watts.	1,400 watts.

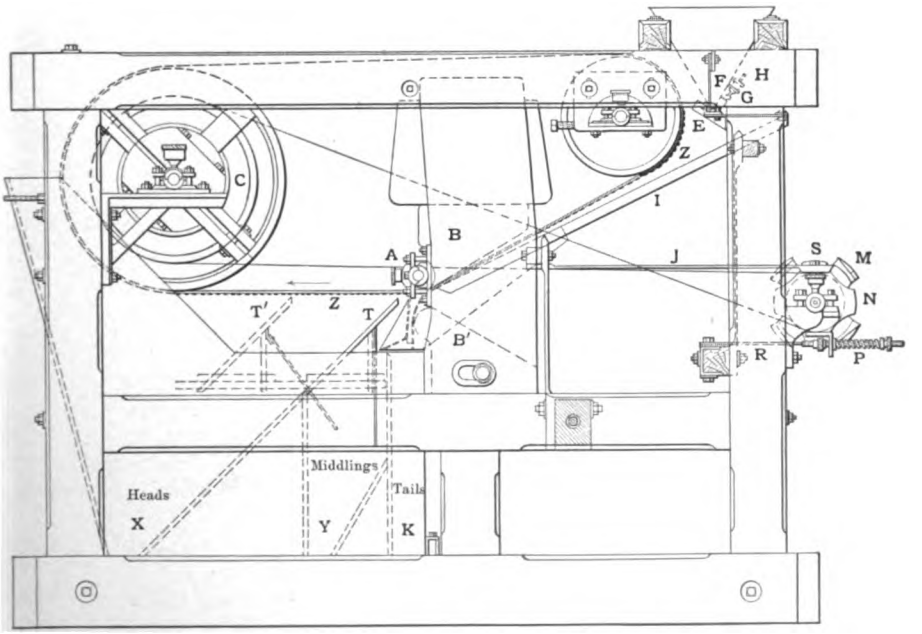

FIG. 806. — KNOWLES' NEW CENTURY MAGNETIC SEPARATOR.

§ 1329. THE KNOWLES NEW CENTURY MAGNETIC SEPARATOR. — The Knowles New Century magnetic separator, of the secondary induction type, is manufactured by the American Concentrator Company.[1] By referring to Fig. 806, the principle of the machine will be made evident. The separator has a

magnet *BB'* with chamfered pole pieces between which passes an endless belt, which is made by the supporting and guiding rollers to travel in a trapezoidal path. This belt is thickly studded with soft steel rivets, held by cup-shaped washers, the latter having serrated edges *Z*. The ore is delivered by a shaking tray *I*, under the inclined portion of the belt. When the belt passes between the pole pieces *BB'* of the magnet, its studs become magnetized and attract the magnetic particles of the ore. As the belt moves away from the pole pieces in its horizontal path, the studs become weakened in magnetic strength and gradually drop the attracted particles so that they fall into appropriate chutes, as shown in the diagram.

The sizes, capacities, weights, etc., of the Knowles New Century magnetic separator are shown in Table 523.

TABLE 523. — SIZES, CAPACITIES, WEIGHTS, ETC., OF KNOWLES' NEW CENTURY MAGNETIC SEPARATOR.

Size of Machine Inches.	Nominal Capacity. 24 Hours.	Weight. Pounds.	Amperes at 110 Volts, Direct Current.	Floor Space. Inches.	Height to Top of Hopper. Feet.	Mechanical Horse-Power to Operate Machine.	Diameter. Tight and Loose Pulleys. Inches.	Revolutions per Minute.
6	7 tons	1,000	3	72 by 36	5	0.25	30 by 3	45
12	14 "	3,500	8	84 by 52	5	0.50	36 by 4	45
18	21 "	5,200	12	90 by 61	6	0.75	36 by 4	40
24	30 "	7,000	15	84 by 73	6	1.00	36 by 6	40
36	46 "	10,000	20	90 by 94	6	1.50	36 by 6	40

Mr. A. G. Garde, general manager of the Payne mine near London, British Columbia, states that by means of one of these separators they are raising the grade of their 42 to 43% zinc product to 57 or 58% and are making a very desirable product for the spelter market. Zinc-ore concentrates from a Wisconsin mine carrying 25% zinc, when roasted and passed over the machine, yielded products as follows:

Zinc tailings assaying 61.7% zinc and 0.9% iron.

Iron concentrates assaying 2.6% zinc.

The Knowles separator is extensively employed in the United States for the separation of roasted zinc-ores and is reported to give satisfactory results.

§ 1330. THE CLEVELAND-KNOWLES MAGNETIC SEPARATOR.[49] — The Cleveland-Knowles magnetic separator made by the United Iron Works Company [55] is shown in Fig. 807. It has two cylindrical magnets *A* and *A'*, each with concentric poles (the coils being wound between the poles). These magnets are set with their axes vertical over a conveying belt *B*, while the magnets themselves offset the belt on one side. Having picked up the magnetic material, passing under them upon the belt, their revolution carries it outside the edge of the belt where it is removed by suitable scrapers made of sheet brass.

The machine is built in several sizes depending upon the width of the endless conveyor belt. The mechanical power required is one horse-power and the maximum electric power required is one kilowatt. This is delivered to the coils by means of sliding contacts fastened to the vertical shafts.

The capacity of the machine [55] varies from 800 to 1,500 pounds per hour according to the material which is being treated and the size of the machine. The manufacturers state that where roasting is necessary before separation, the cost per ton varies from 60 cents to $1.25, depending upon the character of the ore and the amount handled, but that when roasting is unnecessary the cost should in no case exceed 50 cents per ton.

Table 524, taken from the books of the Joplin Separating Company, shows the record of work done by this machine.

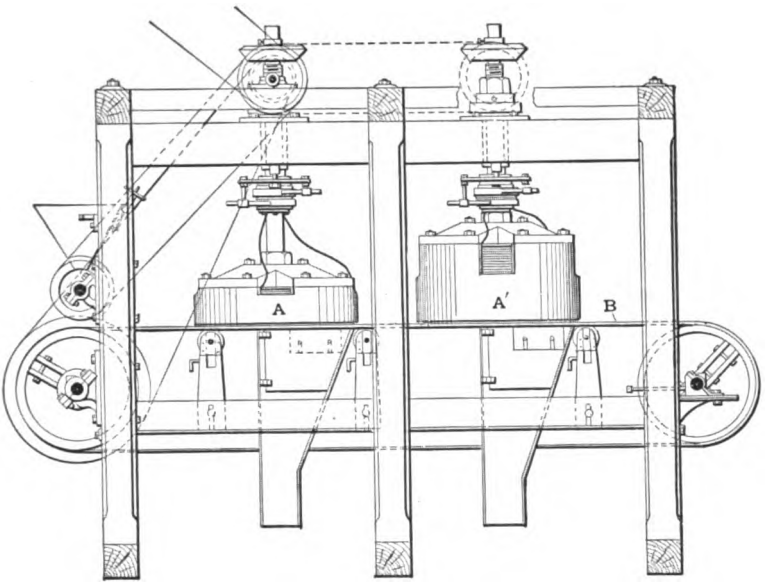

FIG. 807. — CLEVELAND-KNOWLES MAGNETIC SEPARATOR.

TABLE 524. — RESULTS OF CLEVELAND-KNOWLES MAGNETIC SEPARATOR AT THE PLANT OF THE JOPLIN SEPARATING COMPANY.

Crude Ore.				Concentrates.			
Tons Treated.	Percent Zinc.	Percent Iron.	Value per Ton.	Percent Zinc.	Percent Iron.	Value per Ton.	Increased Value.
29.85	50.49	6.55	$12.46	57.00	1.50	$21.00	$ 8.54
43.06	47.19	9.84	13.39	59.45	1.00	24.45	11.06
10.62	58.57	5.00	19.00	63.25	1.33	27.93	8.93
26.03	50.00	9.00	14.00	62.01	1.63	25.88	11.88

These machines have found a very extensive use throughout the United States and are doing satisfactory work.

Roasting for Magnetism.

§ 1331. The separation of many of the mixed sulphide ores is best accomplished by the aid of magnetism.[48] With the very high-power magnets of the Wetherill type, separations can be made of minerals which show no marked magnetic properties whatsoever and which cannot by any means be converted into more highly magnetic forms.

Certain minerals, however, which are of themselves non-magnetic, or at least only slightly magnetic, can be rendered strongly magnetic by subjecting them to a roast under suitable conditions. Thus pyrite, siderite, and hematite may, under certain conditions, be converted into the magnetic oxide of iron. In the same way pyrite and marcasite may be changed over to a magnetic sulphide of iron, Fe_3S_4.

The importance of this part of the process as bearing on the success of the whole operation is so great that it has seemed best to say some things by way of pointing out the precise conditions necessary for obtaining a roast satisfactory

for the subsequent operation of magnetic separation and to describe one or more furnaces which have proved best suited for working this process.

The reduction of iron bisulphide (marcasite or pyrite) to the magnetic sulphide is accomplished by heating pyrite or marcasite moderately, whereupon the following chemical change takes place:

$$3\ FeS_2 = Fe_3S_4 + 2\ S.$$

§ 1332. EFFECT OF CARBON. — The magnetic oxide of iron Fe_3O_4 may be produced by the action of carbon according to the following reactions:

$6\ Fe_2O_3 + C = 4\ Fe_3O_4 + CO_2$, or the ferric oxide, may be reduced first to ferrous oxide and the latter converted to magnetic oxide by combination with an atom of oxygen from the air as follows:

$$2\ Fe_2O_3 + C = 4\ FeO + CO_2.$$
$$3\ FeO + O = Fe_3O_4.$$

§ 1333. CALCINING. — Siderite is decomposed according to the reaction $FeCO_3 = FeO + CO_2$ and the molecule of FeO is converted to Fe_3O_4 by taking oxygen from the atmosphere. In calcining siderite the utmost care has to be exercised to prevent sintering. According to Le Chatelier, the decomposition of siderite takes place at about 800° Centigrade.

§ 1334. ROASTING. — Pyrite and marcasite may be changed over to the magnetic oxide by roasting very carefully at a low red heat. In practice, however, it is impossible to get all the iron into the form of the magnetic oxide, and it may be necessary, after the sulphur has been driven off, to introduce carbon in some form. Twenty or twenty-five minutes are sufficient to change siderite over to the magnetic oxide; whereas thirty-five minutes or thereabouts are necessary for the conversion of pyrite to the magnetic sulphide under practical working conditions.

§ 1335. EXPERIMENTS. — The action of pyrite when in a very thin layer, a single grain deep, and exposed to a low red heat, is very well illustrated by the results of a series of experiments recently performed by the author. The object of the experiments was to ascertain the length of roast best suited for obtaining the maximum amount of magnetic material, the pyrite being roasted in a thin layer. The material used for these experiments was pyrite crushed through 30 mesh and sized on 40 mesh. The oversize of the 40-mesh screen alone was used. Small portions of the pyrite, one gram in weight, were roasted for periods of one-half, one, two, four, eight, and sixteen minutes at a low red heat, and, after cooling, were subjected to magnetic treatment. In each of these cases, however, it was found that roasting had proceeded until the pyrite was practically dead roasted, while in no case as much as 50% of the pyrite had been rendered magnetic. With this idea in mind an attempt was next made to check the roast and it is this set of experiments that is of special interest to us at this point. Eight portions of one gram each were roasted for periods of one-eighth, one-quarter, one-half, one, two, four, eight, and sixteen minutes and immediately thrown upon a cold plate. The results of this series of tests are shown in Table 525 and graphically in the plot, Fig. 808.

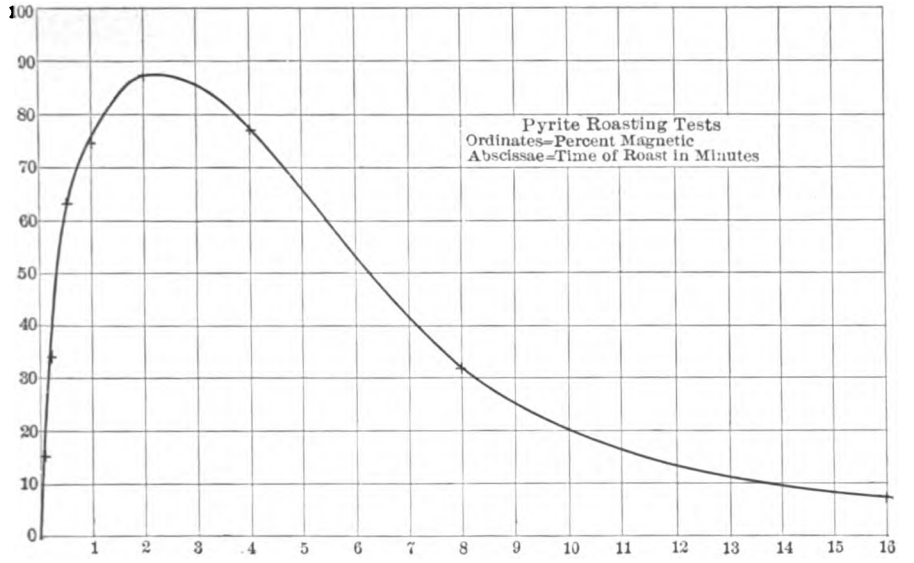

FIG. 808. — DIAGRAM SHOWING EFFECT OF ROASTING PYRITE FOR VARYING LENGTHS OF TIME.

TABLE 525. — TEST SHOWING EFFECT OF ROASTING PYRITE VARYING PERIODS OF TIME.

Time Minutes.	Weight Magnetic. Grams.	Weight Non-magnetic. Grams.	Total Weight. Grams.	Percent Magnetic.	Percent Non-magnetic.
¼	0.15	0.84	0.99	15.14	84.86
½	0.33	0.64	0.97	34.02	65.98
¾	0.60	0.35	0.95	63.10	36.90
1	0.65	0.22	0.87	74.70	25.30
2	0.67	0.10	0.77	87.00	13.00
4	0.56	0.17	0.73	76.75	23.25
8	0.22	0.47	0.69	31.90	68.10
16	0.05	0.63	0.68	7.35	92.65

Thus it may be seen that for pyrite in thin layers a roast of two minutes is sufficient to render a very large percentage magnetic. Theoretically the roasting of one gram of pyrite to Fe_3S_4 should give 0.82 gram of Fe_3S_4, and roasting until all the sulphur is given off should give 0.66 gram of Fe_2O_3. By looking again at Table 525, it will be seen that after roasting for one minute the product weighed 0.87 gram; hence we may conclude that a roast somewhere between one and two minutes in length, let us say one and one-half minutes, should give the maximum magnetic product, whereas at the end of sixteen and even at the end of eight minutes practically all the sulphur has been expelled and the pyrite converted into the sesquioxide of iron. This series of experiments is of special interest in connection with A. R. Wilfley's roasting furnace which will be described later; the principle of this furnace being to expose the ore to a very brief roast, chill it and get it out of the furnace as quickly as possible.

§ 1336. FURNACES. — Roasting may be performed in a revolving cylinder. A modified form of the Howell-White furnace is particularly well adapted for this treatment. In some districts, notably in the Joplin, Missouri, district, reverberatory furnaces are in use, the ore being subjected to a two-hour roast in a layer about 8 inches deep. Furnaces of the McDougall type are considered

preferable to revolving cylinders, however, because of their lower first cost, less space required, and less cost of maintenance and operation. Furnaces of the McDougall type cost, erected, from $5 to $6 per square foot of hearth area. Either the revolving cylinder or the McDougall type of furnace makes a rather large percentage of flue dust, as a consequence of which ample dust-settling flues or chambers are needed.

§ 1337. At Friedrichssegen,[48] on the Lahn, Germany, a furnace of the McDougall type was used for nearly 20 years in roasting for magnetic separation. The ore here treated was a mill product assaying from 11 to 15% in zinc (in the form of sphalerite) and 18 to 23% in iron (in the form of siderite). This was heated to redness in a furnace of the McDougall type. The capacity varied from 20 to 25 tons of ore per 24 hours, with a coke consumption of about 5% of the weight of ore roasted. The furnace itself differed from the Herreshoff

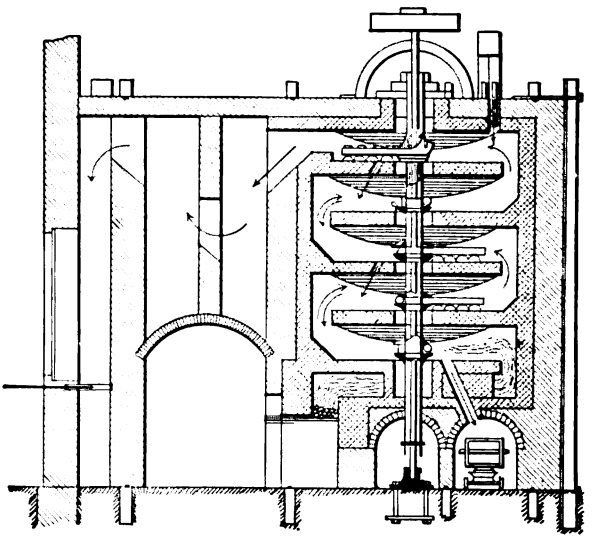

FIG. 809. — CALCINING FURNACE USED AT FRIEDRICHSSEGEN, GERMANY.

furnace, and others of the McDougall type, only in dimensions and structural details. It had two series of five superimposed hearths, which were about 6 feet in diameter. The vertical shaft, which carried stirring arms, was protected from the heat inside the furnace by an enclosing tube, and was driven by a worm gear at its upper end. In each hearth room there was a stirring arm which moved the ore forward. The ore fell on the uppermost hearth at its periphery and was plowed toward the center, where it fell to the second hearth and was then plowed to the periphery and so on until it was discharged from the lower hearth into a car to receive it. This furnace, as shown in Fig. 809, was provided with suitable dust flues and was used very successfully until the introduction of the Wetherill process made roasting, in the case of this ore, unnecessary.

§ 1338. *Wilfley Furnace.* — The latest form of furnace suited for roasting as a preliminary step to magnetic separation is the Wilfley furnace[50] recently installed in Mill 140. A cut of this furnace is shown in Fig. 810. As will be seen the furnace is of the tower type and has the special feature that the ore

to be roasted and the hot gases travel in the same direction. There are two flues in the tower; the hot gases from the fire box pass up one flue to the top of the furnace and there come in contact with the stream of falling ore, they ignite the sulphur and the chemical change takes place while the ore falls through the second, or roasting flue, to the base of the furnace. The ore is roasted in the down-draft flue while descending with the hot gases. When the ore reaches the bottom of this flue the hot ore falls on water-jacket plates D_1 D_2 D_3 D_4 and is cooled while in a disseminated state. The ore is fed into the feed hopper I at the top of the furnace, and there, by means of the feeder J, is fed into the tower in a thin sheet where it falls upon a plate having a slope of 50°, thus coming into immediate contact with the hot gases; by the time it has fallen the 20 feet to the water-jacket cooling zone, the varying sized particles have been changed to a magnetic sulphide. At the base of the furnace the ore falls

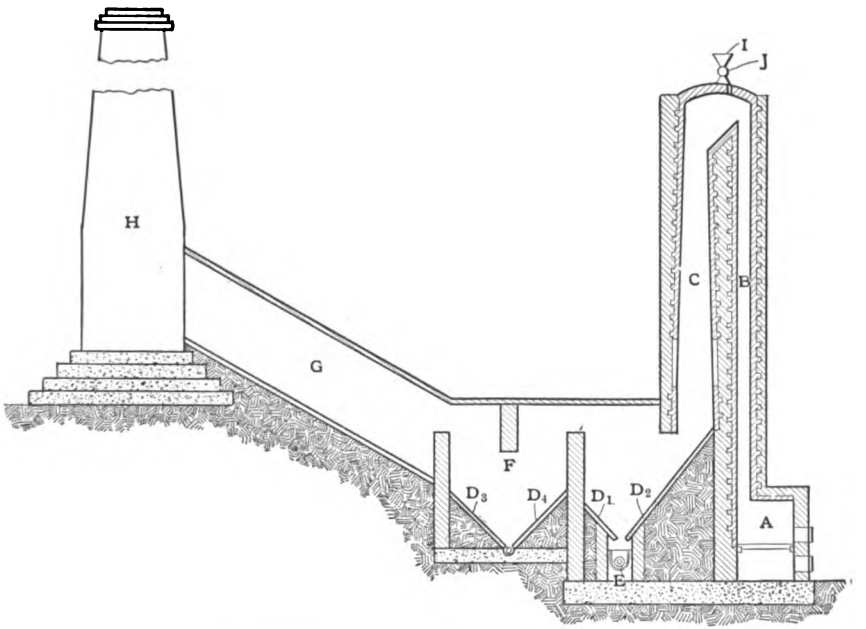

FIG. 810. — SECTION OF WILFLEY ROASTING FURNACE.

into a water-jacket screw conveyor E, discharging the material to an elevator which in turn delivers it to a revolving cooler where the temperature is reduced to about 60° Fahrenheit. In this way every particle that enters the furnace remains a separate particle; there being no sintering or binding together of the particles. In Fig. 810, A is the fire box, B the upward, and C the down-draft or roasting flue; F a dust chamber, G the dust flue, and H the stack.

An interesting feature of this furnace is that the high temperature changes the lead and zinc sulphides in such a manner that even the very finest particles will not float. This makes possible a very close later separation of the lead and zinc minerals on the tables. When this roasted ore is being treated on the tables the wash water runs clear; whereas if the same ore is treated in crude form the wash water contains 10 to 15% of leady zinc slimes.

It has been found that the falling particles have a tendency to wear holes in the water-jacketed plates, particularly in D_2. This is certainly a bad feature

of the furnace, but will not hold it corrected. The principle of the furnace seems excellent and its work is satisfactory.

A furnace [illegible] feet and 40 feet high has a capacity of 100 tons in 24 hours. The roaster does not require close watching or skilled labor to operate, as the temperature is regulated by a thermoelectric couple inserted in the roasting flue above the water jackets. The furnace man watches the pyrometer as he would the steam gauge on a boiler. In this way the temperature can easily be regulated within a few degrees.

The fuel consumption varies with the amount of pyrite in the ore. An ore containing 25% of iron in the form of pyrite will require one ton of coal per 24 hours. The coal is used mainly to regulate the temperature.

Further details concerning the process of separation in use at the Colorado Zinc Company's plant, where this furnace is installed, will be given under the description of Mill 140, in Chapter XLI.

§ 1339. *Wisconsin Roasting Practice.* — In the Wisconsin zinc field [20] three different makes of roasting furnaces have been experimented with: The Dings, the Trego, and the Galena. The Galena roaster has alone established itself as a success. Two divergent systems are represented: a slow roast at low temperature and a quick roast at high temperature. The Galena roaster acts on the first principle while the Trego and Dings furnaces have attempted to make a quick roast.

§ 1340. *Dings Roaster.* — The Dings roaster is a vertical stack having a series of horizontal, revolving baffle plates, and stationary shelves to keep the ore from falling directly through. This furnace was tried at the Tripoli mine near Mineral Point, but was finally discarded. The difficulty came in regulating the heat in the top of the furnace. The sulphur would get on fire and raise the temperature too high, thus warping and burning out the baffles. It is hoped that, by using a variable speed to rotate the top baffles, this difficulty can be overcome.

§ 1341. *Trego Roaster.* — The Trego furnace [23] consists of a fire box and a dust-catching chamber between which is a dome-shaped kiln. This kiln has a circular hearth upon which the ore is stirred and moved forward by a series of revolving rabbles. The ore is fed in at the center and discharged from the side of the hearth. A later design has a revolving hearth, the rabbles being stationary. The ore can be roasted in about twenty minutes. This furnace has been complained of in many places, the charge being that the operating cost is high and capacity rather low.

§ 1342. *Galena Roaster.* — The Galena roaster has proved the best adapted for use in the Wisconsin district. Its principle, as already stated, is a slow roast, for it takes the ore from 2.5 to 3 hours to go through the kiln. In some mills this furnace has been in use for more than two years and has required very little expenditure for repairs. The Galena roaster consists of a dust chamber and a fire box connected by a brick-lined iron cylinder rotating on tires by means of a gear wheel. This cylinder is about 22 feet long and about 52 inches in diameter. Approximately 7.5 horse-power is required.

The roasted ore from the calciner is generally sprinkled with a small amount of water to cool it, and then carried, either by a screw conveyor, a paddle conveyor, or a chain-scraper conveyor, to a bucket elevator. The amount of water added to the ore is so regulated that it will all be driven off by the heat, and the ore be perfectly dry when it reaches the separators. The ore going under the magnets is generally too warm to hold comfortably in the hand.

§ 1343. *Oxland Furnace.* — At Mill 137,[3] the calamine below 15 millimeters in size, as well as the mixtures of calamine and iron, to be separated by the magnetic separator is roasted in the Oxland furnace. This furnace is a cylin-

drical furnace, somewhat similar to the Howell-White, 51.2 inches in external diameter 39.4 inches in internal diameter, 32.8 feet long, and set with a 6.2% slope. The furnaces make an average of 15 revolutions per hour. In preparing the mixtures for magnetic separation 2% of fine carbon is added to the ores.

At this mill there are three rotating furnaces which gave, in 1906, the following results:

Hours of work in the year	15,800.00
Weight of crude material introduced into furnaces-tons	15,137.60
Weight of calcined product-tons	12,184.80
Total consumption of lignite-tons	2,296.85

It should be observed that the fuel is a lignite, rich in ash, which gives 23% of clinkers; it is burnt on a barred grate in a thick layer with injection of water and steam under the grate. The fuel is partly gasified and the gas burns in the furnace with the air. The latter is heated around the hearth and on the hot calcined charge which falls from the furnace. A rotating furnace can calcine a ton of crude ore and give 775 kilograms of calcined product per hour. The total fuel consumption is 145 kilograms per ton of crude ore or 188 kilograms per ton of calcined product.

In 1906 the cost of calcining per ton of calcined product was:

Fuel	$0.65000
Hand labor	0.14752
Steam and motive power	0.10000
Oiling and repairs	0.05302
Total	$0.95054

or 76.5 cents per ton of crude material roasted.

Preparations are in progress to install new revolving furnaces, which will have a tubular boiler between the furnace and the chimney, and thus avoid the expense for motive power and injection of steam. In this case the calcination of a ton of crude ore will cost only 70 cents per ton at the most.

Electrostatic Separators.

§ 1344. During the last eight years a new class of ore separator [57] has been developed and put into practical operation. It has been found that many metallic sulphides and other minerals are good conductors while most gangue minerals and certain of the sulphides, such as blende, are relatively poor conductors of electricity. The principle upon which electrostatic separation depends is, that two bodies charged alike electrically, repel one another, while if charged oppositely they attract each other. Thus if a mixture of good and poor conductors, in a neutral state, be dropped upon a highly charged conducting surface, the good conductors immediately receive a charge similar to that of the surface and are repelled, while the poor conductors are much more loath to receive the charge and therefore not so readily repelled. If, however, a material charged to a high potential of the opposite sign be fed to the above-mentioned surface, the good conductors, as before, assume immediately the condition of the charged surface and are repelled, while the very poor conductors, carrying a charge opposite to that which the surface carries, by the above law, tend to cling to that surface, thus making a sharper division of the separation. Theoretically the separation of two minerals does not require that one of them be a very good conductor and the other a very poor conductor, but merely that there be a difference in the degree to which they will conduct electricity. Commercially, of course, there are limits to this.

The following lists of minerals may be given to show some of the substances

which are usually good conductors and some which, as a rule, are poor conductors. Minerals whose composition is variable, such as garnet, sphalerite containing iron or manganese, etc., belong sometimes to one class and sometimes to the other. The composition of sphalerite or blende is a very important factor, and, as a general statement, a large percentage of iron or manganese combined with it chemically makes of the blende a very fair conductor. Blende from Broken Hill, New South Wales, may be separated electrostatically very readily from Missouri or Wisconsin blende.

LIST OF MINERALS.[52]

Good Conductors.	*Poor Conductors.*
Native metals.	Quartz.
Pyrite.	Quartzite.
Pyrrhotite.	Calcite.
Chalcopyrite.	Limestone.
Galena.	Porphyries.
Garnet.	Slates.
Molybdenum.	Sandstones.
Copper glance or chalcocite.	Garnet.
Silver glance or argentite.	Spinel.
Gray copper or tetrahedrite.	Zinc-blende or sphalerite.
Most sulphides.	Zinc carbonate or smithsonite.
Most copper minerals.	Barite.
" iron "	Gypsum.
" silver "	Granite.
" Manganese "	Fluorspar.
Tellurides.	Most silicates.
Hornblende.	Most gangue rocks.
Black sands.	Monazite.

Efforts along the lines of electrostatic separation were carried on contemporaneously by Clinton E. Dolbear, of Massachusetts, and Lucien I. Blake and Lawrence N. Morscher, of Kansas, and the patents issued to both are now held by closely allied interests.[52]

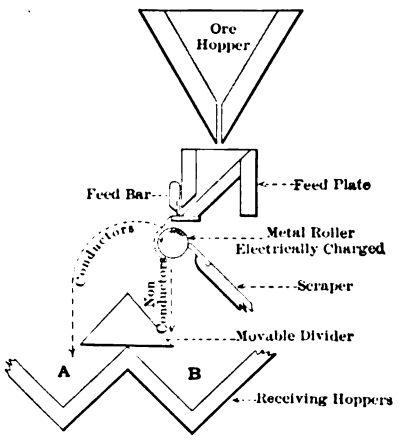

FIG. 811. — PRINCIPLE OF ACTION OF BLAKE-MORSCHER SEPARATOR.

§ 1345. BLAKE-MORSCHER ELECTRICAL ORE SEPARATOR. — Professor Blake and Mr. W. G. Swart, of Denver, have introduced electrostatic separation into the mining field, through the Blake Mining and Milling Company of Denver, Colorado.[52] The machines put out by this company were the commercial embodiment of the Blake and Morscher patents in their simplest commercial form. Fig. 811 shows the principle of action. When particles of high conductivity strike the electrically charged roller they are themselves instantly charged with electricity and repelled towards *A*. Poor conductors require more time, and either drop off or are carried around by the roller to *B* and fall into a separator hopper.

The Blake-Morscher machines, as used in practice (see Fig. 812), were

approximately 12 feet long, 12 feet wide, and 7 feet high (sometimes with an elevator 5 feet higher or 12 feet in all). This machine was built of wood, and had an average capacity of 12 tons per 24 hours; the actual capacity varied with variations in the ore under treatment.[48] The shipping weight of a standard double machine was from 5,500 to 5,800 pounds, and about one horse-power was required for the mechanical and electrical operation.

The electrical apparatus used with this separator consisted usually of a Wagner mica-plate static machine, one being used with each double separator.[57] Herein lay the principal weak point in the Blake-Morscher system, it being almost impossible to do steady or continuous work with the static machine, because of atmospheric disturbances, fluctuations in climatic conditions, etc., affecting the static machines and, therefore, the work of the separators. The brushes of the static machine, a well-known mechanical weakness, make it, as at present developed, not well adapted to the continuous work required of a separator.

During certain seasons of the year when the static machines would work satisfactorily the Blake-Morscher separators gave encouraging results on certain ores: at Mill 140, in the treatment of Leadville ores; at Salt Lake City, Utah, in the treatment of middlings from Mill 131; at the mill of the Montana Zinc Company, in separating ores from the Lexington and Alice mines; and in several other places.

This company is no longer manufacturing machines for the market, the machine having passed into the hands of interests allied with the Huff Electrostatic Separator Company, whose machines and apparatus are superseding the old Blake and Morscher system.

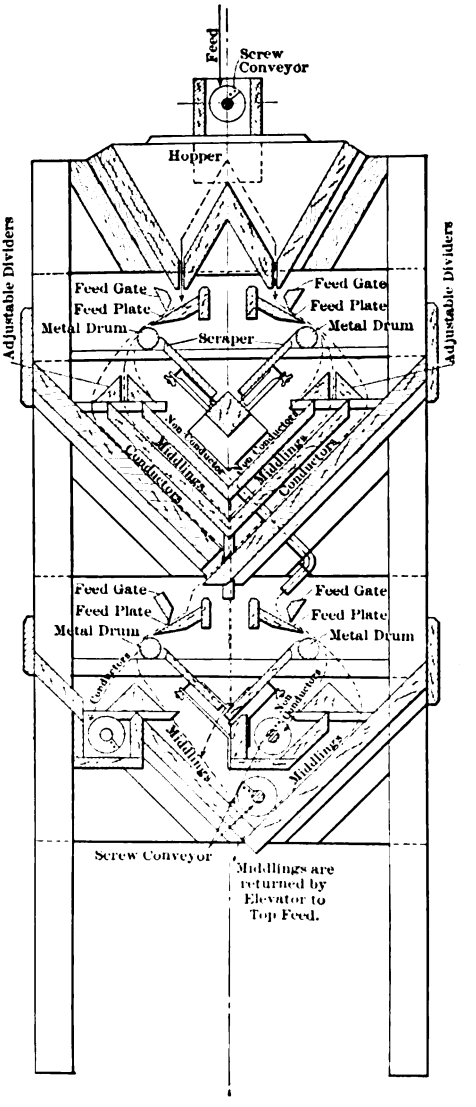

FIG. 812. — BLAKE-MORSCHER SEPARATOR. — VERTICAL SECTION.

§ 1346. HUFF ELECTROSTATIC SEPARATOR.[34] — While the Blake-Morscher separator was being used to introduce electrostatic separation to the mining world, the Dolbear patents were taken over by Charles H. Huff, of Boston; with these as a basis several years were spent in developing the electrostatic art in different directions in the laboratory, and particularly the electrical side of the system which was giving such trouble to the Blake people in the field.

The efforts in this direction were rewarded by success, and as the result several types of separators have been developed, together with several types of electrical generating devices.

The Huff separators are of several types,[37] some utilizing only the repellent action of the field, and some both the repelling and attracting actions. Differing, however, from the Blake machine, the Huff machines are built mainly of iron, the frame and separating roll being electrically grounded to prevent shocks from accidental contact with the machine, which, although not dangerous, are uncomfortable, similar to the shock from a strong medical coil. Instead of one terminal of the electrifying apparatus being connected to earth or left free, as in the case of the Blake, in the Huff apparatus it is brought to a second stationary electrode in close proximity to the roller, making an electrical field which may be varied from nothing to one very intense. Upon the character of this second electrode and upon the electrifying apparatus depends the character of the action of the separator. Fig. 813 illustrates the principle of action in one type of the machines.

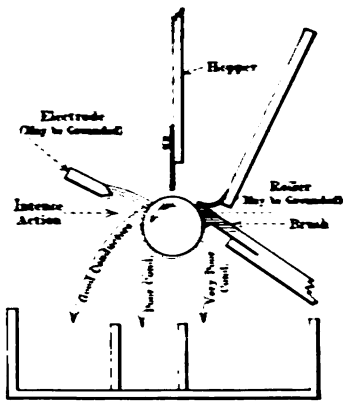

FIG. 813. — PRINCIPLE OF THE HUFF ELECTROSTATIC SEPARATOR.

The machine in use on zinc ores is about 6 feet long, 15 inches thick, and is built up on the sectional book-case principle, the number of rollers being adapted to the requirements of the ore, so that the height is variable, averaging about 6 feet. The machines will treat material from 5 mesh to finer than 200 mesh, the capacity varying with the ore and mesh of the material from 6 to 50 tons per 24 hours. A first-class separation has been made where most of the material passed a 200-mesh screen, after the impalpable dust had been washed away.

The electrical apparatus consists of one central unit for the plant, located preferably in the engine room under the care of the engineer, the wiring to the machines being similar in system to that of the electric lighting of the building. The electrical apparatus is entirely independent of atmospheric conditions, and is of unlimited capacity. As there are no shaking parts the separator takes but a small fraction of a horse-power in mechanical and electrical power together, the only mechanical power required being that necessary to turn the rollers against the friction of the scrapers.

The American Zinc, Lead & Smelting Company, who have the zinc rights for the Huff separators in North America, have built a large plant in Wisconsin, separating the blende-marcasite concentrates of that district, the only separating machinery in the mill being the Huff separators. At this date, November 4, 1908, the mill has been in operation for eight months and is now treating from 60 to 80 tons of concentrates per day. The mill is entirely dry, the dust losses being from 1 to 1½%. The crude concentrates from the wet mills of the district are unloaded into the drier, and pass from there to an elevator, thence to impact screens where four sizes are made: through 6 on 12, through 12 on 20, through 20 on 40, and through 40 mesh, a dust collector taking out most of the material below 200 mesh. The oversize passes through a coarse trommel which removes foreign material in the oversize while the undersize passes to rolls and thence back to the elevator. The four sizes are fed directly from the screens to the roughing machines on the top floor. The products of these machines pass to the finishers on the floor below, one set

making finished blende and the other finished pyrite. One attendant is required for each floor of machines. The electrical apparatus consists of two outfits placed in the engine room, one set used continuously and the other an auxiliary set. The feed to the machines varies greatly in composition but averages about 30% in zinc and 20% in iron. The resulting zinc product averages about 56% in zinc and 4% in iron; while the iron product runs about 39% in iron and 5% in zinc. The blende goes to the smelter and the iron to the sulphuric acid and powder works.

Regarding the field of work in which this machine can operate, E. G. Goodwin, in a report [34] upon an investigation of this separator carried on in the early part of 1905, states that its best work is limited as follows:

(*a*) Between a range of 20 and 200 mesh.

(*b*) To dry ores.

(*c*) To warm ores.

(*d*) To ores with pure quartz or siliceous gangue.

(*e*) To the sulphides of the metals and the metals themselves, besides a few oxides and carbonates. He furthermore states that he considers many of these limitations subject to removal, the machine being, at the time of his report, undergoing a state of rapid development.

Electrostatic separation is in a state of development. Excellent work can be done on copper ores, in the separation of copper sulphides from the various gangues including garnet and barite; separation of blende from other sulphides, and from barite and fluorspar; concentration of graphite; concentration of molybdenite; concentration of monazite; and in solving many other concentrating and separating problems. With some ores from 2 to 5% of moisture is no detriment, provided it does not interfere with feeding the ore through the machine.

The underlying principle of the art is the electrical conductivity of the material, the separation being due to the differences of conductivity, so that any process utilizing these differences of conductivity and the electric field falls within this scope. Electrostatic and magnetic separation are often confused, but their principles and actions are entirely dissimilar. Thus electrostatic separation, a dry process, being capable of utilization in a dry field and applicable to the concentration of most sulphide ores, independent of gravity and magnetic susceptibilities, has a broad and unique field of its own.

Pneumatic Separators.

§ 1347. Freid Gravity Dry-Process Separator.[32] — The principle of the Freid separating and concentrating process is gravity and deflection. The deflecting action is caused by a non-cavitating balanced screw propeller *U* (Fig. 814) placed at the end of the action chamber *V*, which creates a partial vacuum in the chamber and allows the small or light particles to be deflected from the large or heavy particles as the material which is to be separated falls under the action of gravity over the staggered baffle plates *F*, *G*, etc.

The material to be separated is delivered to the hopper *A*, and is fed through the opening *B*, at which point the stream is regulated by a gate and roller feeder. The material falls on a dead plate *C*, slides off this plate onto the cleaner plate *D*, which has an angle turned up at *E*. Here the material builds up, preventing wear on the cleaner plate itself. The material which has passed over the cleaner plate *D* overflows onto a baffle plate *F* and so on. The air being sucked in through the horizontal openings *H* deflects the lightest particles of ore farthest, leaving the heaviest particles in compartment *I* and the successively lighter particles in compartments *Q*, *O*, *N*, *M*, *L*, *K*, and *J*. From

the compartments the sized products are discharged by means of chutes at Y. A dust tower is provided at *R*, suitably designed for settling the very finest particles of ore. The entire device is adjustable over a wide range, making it possible to separate material from 0.5 to 22.0 specific gravity and as coarse as 0.5 inch. This device is manufactured by the Freid Engineering Company, of Orange, New Jersey.[22]

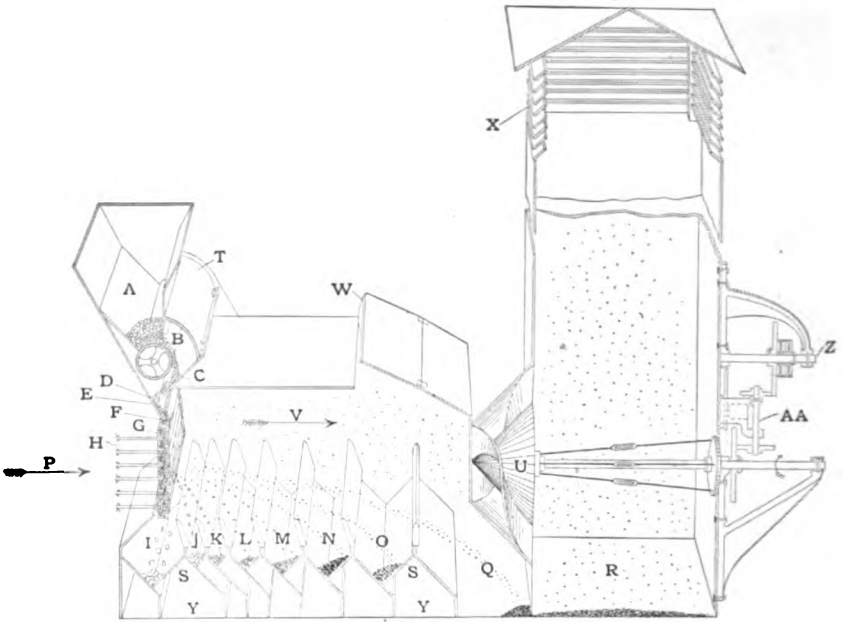

FIG. 814. — FREID GRAVITY DRY-PROCESS SEPARATOR.

§ 1348. SUTTON, STEELE & STEELE DRY TABLE.[18] — This is a table of the Wilfley type with main sills, tilting frame, supports, table top, and a head motion which gives a jerking propelling movement to the grains of sand in much the same way as other tables. The radical difference lies in the fact that it uses, instead of water, a current of air which rises through the bed of sand under a pressure of 0.5 ounce per square inch and so completely mobilizes it that the sands are stratified. The heavier grains are pushed forward by the head motion toward the concentrates side, while the lighter grains roll or flow by the force of gravitation down the slope toward the tailings side.

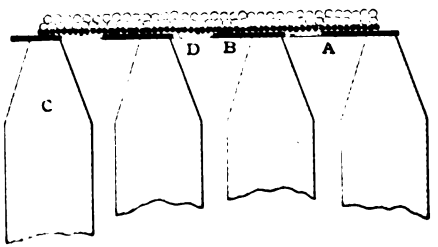

FIG. 815. — SECTION OF RIFFLES OF SUTTON, STEELE, AND STEELE TABLE.

The construction[16] of the table is the matter of greatest interest and importance. Its outline is rectangular with the usual feeding side, mechanism side, tailings side, and concentrates side. In plan the skeleton looks like a wooden grizzly, while Fig. 815 shows a cross-section detail in which *A* is the pervious cloth top; *B*, impervious paper strips; *C*, supporting ribs; *D*, bar or open cloth to support the paper strips. The paper strips are narrow, tapering, and terminated along a diagonal line.

Above is the layer of pervious muslin cloth, while the space between and beneath the bars is used as a pressure box into which air is fed by a separate blower for each table.[28]

The speed of vibration is very high, 450 to 500 revolutions per minute.[13] This, combined with the great mobility of the sand, due to the rising air current, gives the table a capacity which is said to be 2.5 to 3 times as great as that of a Wilfley table.

The test [51] quoted in Table 526 was made on ore sized by a Keedy dry-ore sizer. The harmful dust may be removed by a suction fan during the sizing operation.

TABLE 526. — RESULTS OBTAINED BY SUTTON, STEELE & STEELE DRY TABLE ON ORE FROM EUREKA, UTAH.

I				II				
Weight of Feed in Pounds.	Assay Per-cent Lead in Feed.	Weight of Lead, Pounds in Feed.	Percent of Total Lead in Feed.	Mesh.	Weight of Concentrates in Pounds.	Assay Per-cent Lead in Concen-trates.	Lead Con-tent of Con-centrates in Pounds.	Percent of Total Lead Saved.
181,944	6.85	12,475	47.54	26	23,946	47.96	11,487	92.08
54,972	9.07	4,990	14.35	36	7,886	59.98	4,730	94.79
49,709	10.68	5,310	13.00	50	8,157	60.61	4,944	93.10
24,341	13.54	3,298	6.35	62	4,794	65.25	3,128	94.60
17,678	14.14	2,500	4.62	72	3,658	66.35	2,417	96.68
15,150	13.33	2,022	3.95	86	3,007	63.48	1,909	94.50
17,743	14.82	2,630	4.64	116	3,935	63.40	2,494	94.10
11,021	18.05	1,980	2.88	140	3,159	58.46	1,847	93.28
10,218	21.71	2,219	2.67	173	2,817	62.58	1,763	79.45
382,776	9.77	37,424	100.00		61,359	56.58	34,720	92.77

III The average tailings assayed 0.8 percent.

Flotation Processes.

§ 1349. In § 617, Vol. II., of Ore Dressing, it will be noted that but one process dependent upon the physical property of adhesion is described — namely, the Elmore process. Since the appearance of Ore Dressing, however, this group of processes has undergone an extremely rapid development and has become of very great importance. The Elmore process, the earliest successful process of this sort, has undergone radical changes and other important processes have been developed. In Australia the Delprat, Potter, DeBavay, and Minerals Separation or Catermole processes have supplied cheap and efficient means for working the low-grade zinc tailings to advantage. While these processes have so far found their most extended application in Australia, their importance is gradually becoming felt elsewhere. The Macquisten process is probably the most recent development. This is a water flotation process pure and simple. A very interesting instance of a plant at Golconda, Nevada, equipped for treating ore by this process, will be described.

It may be of interest, at this point, to review briefly some of the theories which have been studied out as a result of the experimental work performed in an attempt to determine just what takes place when a grain of sulphide mineral is floated.

§ 1350. Theory of Flotation Processes. — Messrs. Swinburne and Rudorf [15] give the following list of minerals tested by them which are most easily floated, in the order of ease with which they are floated: Molybdenite, stibnite, galena, mixed zinc-lead sulphides, chalcocite, sphalerite, pyrite.

It should be noted that the most easily floated minerals (molybdenite and stibnite) are the most greasy of the sulphide ores, *i.e.*, they are wetted with difficulty.

The explanation of the processes as originally given was that the acid liberated hydrogen sulphide from the sulphides themselves, floating the grains thus acted upon and leaving the gangue which is unaffected by the acid.

According to Huntington this theory does not concur with the facts. The sulphides generally treated are not attacked by the acid solution, or only very slightly, while, on the other hand, carbon dioxide is evolved from carbonates in the ore and it would be expected that these minerals, and not the sulphides, would be floated. Another important fact is that flotation does not take place at all until the temperature of the solution approaches the boiling point.

It was next assumed that the carbon-dioxide gas was derived from the calcite or carbonates produced on the surface of the sulphides. The latter supposition cannot be true, as the ores treated are often obtained below the zone of oxidation. Huntington has proved that the CO_2 is liberated mainly from rhodochrosite and siderite and not from calcite, by analyzing the solution after flotation has been accomplished. He concluded from his experiments that rhodochrosite and siderite are the only carbonates which give flotation with a true coherent scum. He also found that precipitated manganous carbonate and ferrous carbonate, although easily decomposed, do not give flotation.

Swinburne and Rudorf came to the conclusion that the effect of flotation was due to capillarity and by their theory explain why the sulphides are selected by the gas and why the temperature is of so much importance. Supposing a particle has no adhesion, *i.e.*, is not capable of being wetted. The surface tension of the liquid will cause it to surround the particle as closely as possible and we have a gas bell with a particle inside it. Adhesion, however, tends to wet the particles and this tendency continues until finally the whole grain becomes wet and the gas bell is detached. In order that the particle should float, the gas bell must not become detached, the adhesion must be minimized, which is accomplished by increasing the temperature, whereupon the adhesion is destroyed. The difference of adhesion of various minerals to dilute acid is considerable. Thus galena is more difficult to wet than silica and so on; and *those ores alone can be concentrated by flotation* whose valuable constituent is some greasy sulphide as galena or, at most, so automatically attached to the greasy sulphide that it comes off with it.

Huntington [15] criticizes Swinburne and Rudorf's theory as to their assumption of an air film on the surface of sulphide particles. He found the particles were floated perfectly after he had taken every precaution to remove all air by exhausting with a vacuum pump and other means. He concludes by saying that when a gas bubble comes into contact with a mineral particle so as to cause a relatively large surface of the gas to be in contact with it, the particle will be floated, and that the less the wetting the greater will be the force required to detach the bubble, while, if the surface of the particle is wetted, the bubble has no attachment at all.

§ 1351. Elmore Vacuum Process. — The Elmore [26] oil process of concentration is based upon the selective action of oil on certain minerals. It also employs reduced pressure to increase, by expansion, the lifting power of gas bubbles in a liquid medium.

If a flowing pulp of crushed ore and water be agitated with oil, the latter has a selective action for metallic mineral particles over the gangue. This selective action is increased in certain cases by the addition of an acid to prevent the oil from sticking to the quartz gangue, and by reduction of the pressure below that of the atmosphere. In some cases the addition of acid liberates gas bubbles which attach themselves to the heavy mineral particles, and being largely increased in volume as a result of the lowering of the pressure, they are sufficient to carry the greased particles to the surface. The particles of

gangue are not similarly affected, hence a separation between them is possible.

The essential parts of the apparatus are a mixing trough and a separator.[24] A diagrammatic sketch of the necessary apparatus is shown in Fig. 816. The

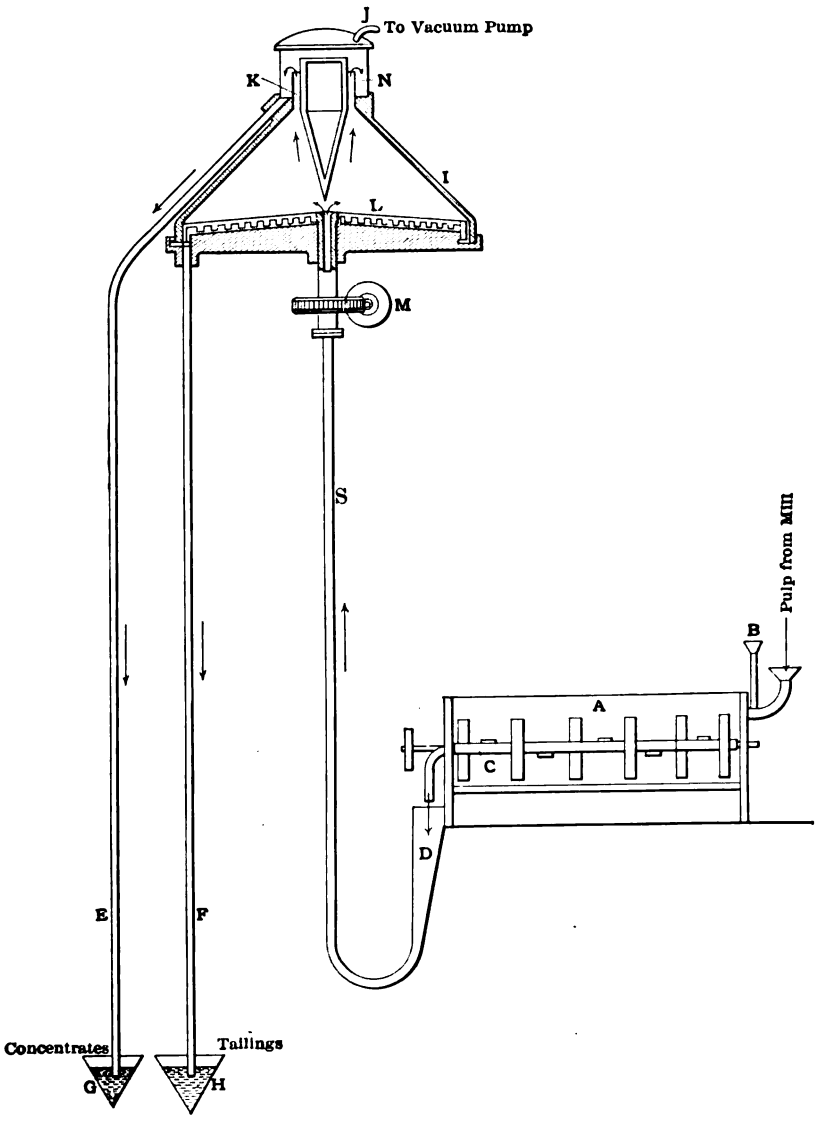

FIG. 816. — ELMORE VACUUM OIL CONCENTRATOR.

mixer *A* is a horizontal wooden cylinder into which is fed the crushed ore and water. Stirrers *C* which make from 30 to 40 revolutions per minute serve to thoroughly agitate the pulp with the oil which is fed in at *B*. Acid, if necessary, is also fed at *B*. The pulp flows in constantly at the feed end and is continuously discharged at the discharge end into the funnel *D*. This funnel is connected

by means of a pipe to the separator *I*, and from *I* there lead two pipes — each one larger than *S* — to two separate water-tight tanks. The lower ends of these pipes are sealed by the water. The upper end of the pipe *S* enters the center of the bottom of the separator *I*. Upon the application of a vacuum through pipe *J*, the pulp from the mixer rises through the feeder pipe *S* to flow into the separator. Here the gangue remains on the bottom while the concentrates rise to the surface as a result of the action of the oil and gas bubbles. The rakes *L*, making 2 revolutions per minute, are so arranged as to cause the gangue particles to be pushed toward the edge of the tank. They discharge down the tailings pipe *F*, which is sealed by water. The amount of material discharged down the tailings pipe *F* is slightly less than the incoming feed and this causes the excess to flow over the top of the separator into the pipe *E*. This overflow contains the concentrates, thus effecting a separation. The feed pipe *S* is usually from 25 to 30 feet long while the tailings and the concentrates discharge pipes are a few feet longer.

It is thus seen that pipes *F* and *S* form a siphon, which continually keeps the separator full without the aid of outside power. The operation of the apparatus is continuous as long as feed is provided by the mixer. Glass windows are provided in the metal separator so that the quality of work being done may be watched. By heating the apparatus with steam the extraction is often increased.

The quantity of oil used is so small, no centrifugal treatment is needed for separating it from the concentrates, as in the older process, page 831. The small percentage of oil contained does not interfere with the smelting. The tailings are fed to a second separator where two products are made, concentrates and tailings. These resulting tailings are re-treated in separators as long as the resulting values obtained pay for the work.

Two and one-half horse-power are required for a 5-foot unit. This gives the necessary power for driving the vacuum pump, mixer, and separator. The apparatus is usually constructed in units, each unit being a standard 5-foot separator. The capacity of the separator varies with the character and size of the ore, but an average figure is 40 tons in 24 hours.[27] No expensive foundations are necessary, as vibration is wholly absent, since the rakes make 2 and the mixer arms from 30 to 40 revolutions per minute. No sizing or classifying is necessary, much better work being done on a natural product than on a sorted or sized ore. The operation is wholly automatic. The amount of oil necessary per ton of ore treated varies from 3 to 10 pounds. Various oils are suitable for the concentration, among them crude oil from Texas and California, Texas residuum, fuel oil, Russian crude, and cheap oils from Borneo, Sumatra, etc. Tars, blast furnace oils, olive oil residue, oleic acid, kerosene, fish, and various other oils have all proved satisfactory. The field of application is very large as seen from Table 527, which shows the results of a number of small-scale and full-sized tests.

TABLE 527. — EXTRACTION OF METALS AND MINERALS BY THE ELMORE VACUUM PROCESS.[47]

Description of Ore.	Metals Extracted.	Gold & Silver, Oz. per Ton. Other Metals, Percent.			Percent Extraction.
		Ore.	Tailings.	Concentrates.	
Graphite ore	Graphite	56.7	19.3	80.3	86.6
Australian gold ore	Gold	0.22	0.035	1.04	86.6
Galena with quartz gangue	Silver	13.20	1.56	57.34	90.6
" " " "	Lead	6.30	0.66	22.50	91.0
Argentite and discolored quartz gangue	Silver	19.32	0.727	77.45	96.78
" " " "	Gold	0.03	0.005	0.05	85.50
Low-grade "Banket" from South Africa	Gold	0.150	0.015	2.80	90.7
Rand "Banket" sulphide of iron, quartz gangue	Gold	0.305	0.04	8.00	87.4
Galena and pyrites, barytes gangue	Lead	3.35	0.28	14.60	93.3
" " " " "	Silver	31.60	3.00	139.24	92.5
Cupreous barytes ore	Copper	3.66	0.25	22.56	94.0
Chalcopyrite, feldspathic gangue	Copper	1.97	0.188	26.04	91.1
Cupreous barytes ore	Copper	3.48	0.05	21.99	98.8
Chalcopyrite, granitic gangue	Copper	1.23	0.07	6.92	95.2
Chalcopyrite, quartz, feldspathic gangue	Copper	0.77	0.11	13.02	86.5
Chalcopyrite, limestone gangue	Copper	1.05	0.17	21.88	88.5
Chalcopyrite, basic gangue with magnetite and garnet	Copper	0.92	0.10	26.00	90.2
Copper glance, chalcopyrite, quartz gangue	Copper	1.36	0.14	18.20	90.4
Spathic iron with chalcopyrite	Copper	2.56	0.11	17.60	96.2
Bornite and chalcopyrite	Copper	1.53	0.16	17.47	93.1
Spathic iron and chalcopyrite	Copper	2.56	0.11	17.60	96.3
Chalcopyrite with magnetite, schistose gangue	Copper	2.00	0.06	14.60	97.4
Pyrite and chalcopyrite	Copper	2.15	0.72	5.60	100.0*
" " "	Gold	0.22	0.02	0.46	95.0
" " "	Copper	5.55	0.18	11.00	99.0
" " "	Silver	8.60	0.60	17.00	96.0
Chalcopyrite, quartz feldspathic gangue	Copper	5.38	0.20	24.25	97.0
Spathic iron with chalcopyrite	Copper	0.99	0.07	14.70	93.4
Amber-blende, quartz gangue	Zinc	23.9	2.25	50.70	95.3
Blende, shale gangue	Zinc	5.5	0.9	44.50	85.1
Spathic iron ore with blende	Zinc	5.92	1.27	43.90	81.0
Blende and barytes	Zinc	18.2	0.40	64.50	98.9
Blende, garnet and rhodonite gangue	Zinc	19.9	1.37	44.30	96.3
Broken Hill, tailings	Zinc	16.9	2.85	48.45	97.7
Broken Hill, tailings with a rhodonite and garnet gangue	Zinc	30.00	2.40	48.40	96.7
Stibnite, which floats badly, pyrite, and quartz gangue	Gold	.....	0.06	26.20	95.2
Molybdenite, feldspar gangue	Molybd'm	3.40	0.25	40.80	93.2
Galena, pyrites, quartz	Lead	7.95	0.35	38.50	96.4
Pyrites and stibnite, feldspar	Gold	1.26	0.09	10.51	93.7
" " " "	Antimony	6.33	0.22	54.20	96.9
Stibnite, gold, quartz gangue	Gold	1.20	0.08	19.10	93.8
Molybdenite, gangue containing magnetite and much garnet	Molybd'm	2.30	0.06	51.57	98.1
Galena, quartz gangue	Silver	13.35	1.36	126.42	90.0
" " "	Lead	5.6	1.00	55.70	90.0
Gold quartz, with schist, sandstone, some chalcopyrite and tetrahedrite	Gold	0.38	0.04	4.86	90.0
Rand "Banket"	Gold	0.20	0.03	5.29	85.5
Galena, barytes gangue	Silver	13.35	1.37	138.22	90.7
" " "	Lead	5.60	1.00	60.90	83.5
Galena in gangue of carbonate of manganese	Lead	22.5	0.4	64.00	98.7
" " " " " " "	Gold	0.02	Trace	0.05	100.0
" " " " " " "	Silver	2.00	Trace	6.00	100.0

* This is supposedly an error.

The process has been applied with success to ores which are difficult or impossible to treat by wet concentration, as chalcopyrite from magnetite; chalcopyrite from siderite; galena and blende from a gangue of barite; copper sulphides from cassiterite; copper, zinc, and lead minerals from heavy gangues. It is also applicable to the treatment of antimony or molybdenum sulphides and other ores which give a high loss by water treatment. Cinnabar, pyrite, gold, silver, and copper all concentrate readily with small tailings loss. The results of regular work at Cornwall, England, where low-grade waste ores are being treated, are as follows:

Pulp	0.412% copper
Tailings	0.128% "
Concentrates	8.176% "

The result of regular work at a Scandinavian plant is as follows:

Pulp	1.81 %	copper
Tailings	0.037%	"
Concentrates	6.83 %	"

A Swedish plant having ore running 0.802% in copper makes concentrates running 23.86%, and tailings 0.123% in copper.

The claims made for this process are — very high extraction, low cost of installation, small repair bill, and small bill for attendance. Classification is not necessary but rather detrimental. Treatment of slimes is made possible and there is no middlings product with which to deal.

The treatment of the complex tin-copper-tungsten ores at Dolcoath, Cornwall, England, on a commercial scale by the Elmore vacuum process has shown favorable results. The ore is ground fine in a ball mill and is delivered to a mixer where acid and oil are introduced. The mixture then passes to the vacuum machine where the concentrates, containing the copper, bubble over as scum and are carried off, while the tailings, containing the tin, are drawn off at the bottom. In the first test the machine ran for 43.25 hours and treated 31 tons of ore. The pulp was reduced to pass a screen whose size of openings corresponded to a screen of 20 holes per linear inch. The amount of acid used was 115.9 pounds of sulphuric acid, specific gravity 1.5, and the oil used was 686 pounds of fuel oil or Texas residuum. This amounts to 3.7 pounds of acid and 22 pounds of oil per ton of ore.

The ore fed assayed 2.41% in copper. The concentrates contained 17.4% of copper, 8% of arsenic, 6% of zinc, and the remainder was made up of iron and sulphur. Less than 0.5% of gangue went over with the concentrates. The tailings contained 0.7% tin oxide and 0.23% of copper.

This test was run under poor conditions as the ball mill could not furnish feed fast enough, and subsequent tests gave better results; however, 92% of the copper values were contained in the concentrates.

In Chapter XLII. will be found a description of a method for making laboratory tests to determine the applicability of this process to various ores.

§ 1352. FLOTATION PROCESS OF THE MINERALS SEPARATION COMPANY, LIMITED.[45] — In this process, as practiced at Mill 130, the zincy slimes and grainy residues, coming directly from the wet galena-concentrating plant, are fed continuously, by means of suitable plows, to mixing vats. The pulp, which is about 3 parts of ore to 10 parts of water and to which is added about 1 pound of oleine and from 10 to 15 pounds of sulphuric acid per ton of ore, is thoroughly agitated, mixed, and aerated in passing through these mixing vats.[46] Steam coils in these vats also raise the temperature of the pulp to about 120° Fahrenheit.

The regular introduction of fine slimes with the feed is said to be an important factor in the success of the process. The effect of aeration, under suitable conditions, is manifested by granulation of the metallic sulphides, so that, when the granulated pulp passes from the mixing vats into the spitzkasten, flotation of the sulphides is at once effected; and, while the gangue sinks and is drawn off at the spigot, to be re-treated on other spitzkasten, the sulphides form a scum on the surface of the liquor and, since the inflow is greater than the spigot outflow, are recovered in the overflow.

At this plant [8] the daily capacity is about 550 tons of ore, which averages to run 5.1% in lead, 20.4% in zinc, and 8.2 ounces in silver per ton. The sphalerite concentrates run about 12% in lead, 43% in zinc, and 19 ounces in silver per ton, representing a recovery of 80% of the lead, 80% of the zinc, and 68% of the silver in the feed.

The same process is employed by a similar plant in treating old weathered tailings.[8] This plant handles about 675 tons per day and the feed has a similar analysis to the feed which the other plant handles, the only difference being that this feed is weathered while the first is not. The sphalerite concentrates from this plant run 10.8% in lead, 45.6% in zinc, and 15.0 ounces in silver per ton, representing an extraction of 66% of the lead, 82% of the zinc, and 76% of the silver. The total costs at this plant are about $1.46 per ton.

§ 1353. POTTER AND DELPRAT PROCESSES.[22] — The Potter and Delprat[4] processes are essentially the same and will be described together. Potter[6 43] uses a dilute sulphuric acid bath, while Delprat[5 42] uses sodium chloride and sulphuric acid. (Originally salt cake, sodium acid sulphate.) Both these processes were developed and perfected at Broken Hill, New South Wales, and the ore is treated in the same general manner in either case.

The ore, after being finely crushed, is charged into an acidulated bath of water contained in a vessel similar to an ordinary spitzkasten. The action of the pulp is the reverse of what ordinarily happens in a spitzkasten, *i.e.*, the heavy sulphides rise and pass off with the overflow, while the light gangue minerals sink and are drawn off at the bottom. This result is obtained by means of the acid acting upon the minerals so as to evolve a gas, mainly CO_2, the bubbles of which selectively attach themselves to certain minerals of the ore (sulphides), thus causing them to rise to the surface and form a scum, which is readily removable, enabling a separation to be made.

The acid in the water amounts, commonly, to 2% and, as salt is added, the solution is usually brought up to 1.4 specific gravity. A densified bath appears to be of doubtful advantage and it is well to note that a bath necessarily becomes densified after using, due to the introduction of iron and manganese salts and other impurities. The temperature at which the best results are obtained is about 80° Centigrade.

The plant for either process is very simple, the essential apparatus being similar to the spitzkasten. It is built of 3 by 3-inch timber, lined with 1-inch boards, and, inside of this, with 6-pound sheet lead. The ore, slightly wet, is fed by a shaking feeder. The solution arrives above the tank through pipes branching down into the tanks. The main supply pipe leads from storage tanks into which the clear solution is pumped from the settling tanks. The solution is re-heated here by the introduction of steam. The spigot discharge, which removes the gangue continuously, is regulated so as to give a steady overflow, the spigot discharging to a conveyor belt which allows the solution to drain off and carries the tailings to the dump.

As the process is very delicate, care must be taken not to vibrate the solution so as to destroy the adhesion of the gas and cause the particles to sink to the bottom. The fact that the adhesion may be so destroyed is made use of by allowing the overflow of concentrates to drop into the collecting tanks.

With ores adapted to the process, a very fine separation can be made.[5 42] The ores at Broken Hill yield concentrates carrying from 42 to 45% in zinc and from 72 to 75% of the total zinc in the original ore. During a 5-week run by Block 14 Company, 2,450 tons of mill tailings were treated averaging 17.6% in zinc, 6.3% in lead, and 7.6 ounces in silver per ton. The first-class concentrates amounted to 739 tons, assaying 42% in zinc, 5.5% in lead, and 11 ounces in silver per ton. There was also a middlings product, amounting to 95 tons, which assayed 22.5% in zinc, 13% in lead, and 13.5 ounces in silver per ton. Mill 129 also uses the Delprat process.

The processes are comparatively cheap. One man tends six separators. His duties are merely to see that the scum is floating off regularly and that the tailings discharge does not clog up. The rise of the scum is very rapid and it

accumulates in a dense mass about 1.5 inches thick. Holes in the scum indicate irregular working. The consumption of acid is from 30 to 35 pounds (computed as 100% H_2SO_4) per long ton of ore. The solution loses about 30° Fahrenheit in circuit. The pumping and re-heating of the solution, acid, and labor constitute the chief items of expense. The total cost at Broken Hill, including transportation from tailings pile to flotation plant, is only about 50 cents per long ton.

Slimes have not been successfully treated thus far. The difficulty is because of mechanical entanglement of the rising particles and the finer slimes which fail to settle fast enough, a dirty, low-grade scum resulting.

Experiments seem to show that there must be a certain ratio between the floatable and non-floatable materials. In some cases, blende which alone would not float became buoyant upon adding a certain proportion of quartz, while in other cases ores which alone gave good results failed almost completely upon adding a large amount of sand.

The presence of siderite in the zinc ores of the Slocan district of British Columbia indicate that these ores might be susceptible to separation by the flotation process. In some experiments upon these ores it was found that concentrates running as high as 50% in zinc could be obtained from several ores (Ruth mine, Blue Bell mine) with extractions ranging from 85 to 95% of the zinc values. In one test, made on Blue Bell ore, 100% of the lead and silver was extracted with the zinc. The process was tried on some ores which contained no siderite and the results were entirely unsatisfactory.

Flotation experiments may be performed in ordinary beakers, but it has been found that the depth of the bath is an important factor in the process. Experiments may be better performed in a glass tube, standing erect, about 3 inches in diameter and 3 feet long. This tube should be supplied with acidulated water from a vessel at a higher level, a glass tube passing down from the latter into the separating tube, and extending to within about 10 inches of the bottom of the latter. The separating tube should stand in a basin to catch the overflow. The acid water is heated to about 80° Centigrade in the supply vessel.

§ 1354. THE DEBAVAY FLOTATION PROCESS.[21] — The principle of the DeBavay process is to gasify the crushed ore or pulp with carbon dioxide gas obtained from ordinary flue gas. The gasified ore is then spread in a thin sheet upon a table whereon the flotation is effected. The ore should be ground to pass a 40-mesh screen and the fines under 80 mesh should be removed. The plant required in connection with this process is more extensive than that used in connection with either the Potter or Delprat processes, and its operation lacks the simplicity of these, wherefore its cost per ton is likely to be greater. This process is more delicate than the others, as a result of which galena is floated to less extent. In some cases this may be a drawback, but it is a distinct advantage in many cases as it produces higher grade zinc concentrates. It has not been tried as yet on a large commercial scale, but work thus far at Broken Hill, New South Wales, Australia, indicates the possibility of extracting nearly 100% of the zinc and about 75% of the lead and silver in the form of concentrates assaying from 44 to 46% in zinc, 11 to 14% in lead, and 15 ounces of silver per ton.

The apparatus consists of an inclined table A (Fig. 817), supported so that it can be adjusted at any angle to the horizontal, usually about 35°, and made preferably of metal or other non-absorbent material. From the longitudinal lip b^1 the ore, previously gasified by passing flue gas through the pulp thoroughly saturated with water, is fed in a regulated quantity into a chute, B^3, and thence delivered to the inclined table A in a thin paste. The lower part of the table A

dips into a shallow trough F, which is filled with water to the level of an overflow lip F^1. Outside of this ledge is a gutter G leading to a concentrates bin. In the trough F, under the lower end of the table A, the front part of an endless traveling-belt H is arranged, its top surface forming an inclined plane leading from under the water at the front of the trough to over its back ledge. The tailings are washed off the belt by a jet of water.

The pulp flowing down the inclined plane tends to layer, the sulphides floating on top and the gangue settling to the bottom. On reaching the trough, the sulphides continue to float and are discharged into the gutter G, while the gangue sinks to the conveyor belt and is removed. The gangue may then be re-treated to extract any sulphides which did not float the first time.

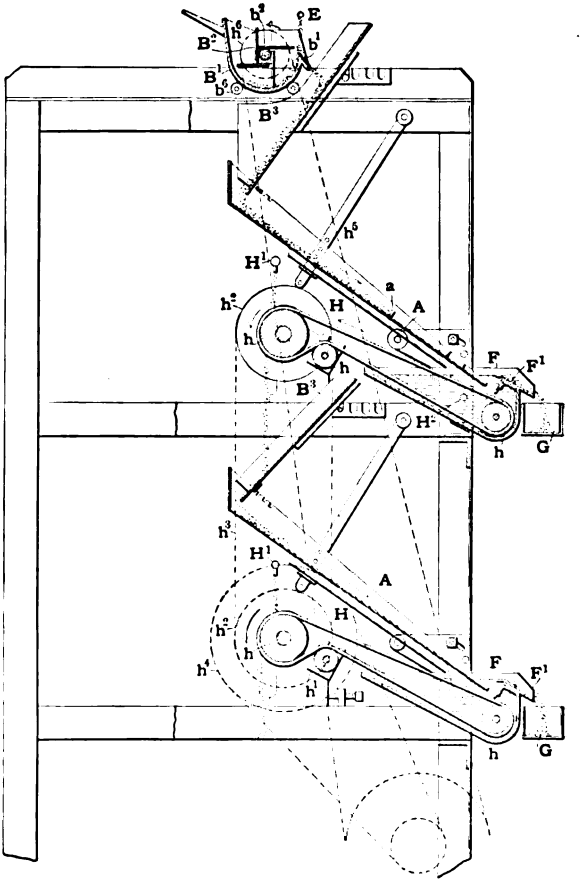

FIG. 817. — DEBAVAY FLOTATION APPARATUS.

§ 1355. MACQUISTEN'S FLOTATION METHOD.[29] — Coates Tube. A. P. S. Macquisten's method uses no chemical or physical agents, subjects the ore to no preliminary treatment (except fine crushing), but simply causes sulphide minerals to float on the water surface while quartz and other gangue minerals sink.

The principle which this machine exploits is based on the different affinities exhibited by the various constituents of sulphide ores to the surface tension of water. Sulphide minerals are affected positively by the surface tension of the water, that is, they do not penetrate the surface easily, but tend to remain on the surface, while rock constituents are affected by it negatively, that is, they break through the surface easily and sink through the water.

It is believed that the flotation of the sulphide minerals is due to some superficial property which prevents them from becoming wet, while gangue minerals do not possess this property and readily sink. Practically it is found that only those sulphides of a "greasy" character are capable of being floated. These sulphides can, moreover, be floated even after prolonged and repeated immersions in water.

It is obvious that the process depends upon a delicate balance of small forces. The particles of ore, in order to be floated, must be small in size so that their weight shall not cause them to overcome the surface tension of the

water. They must be brought very carefully upon the surface of the water so that the gangue, or easily wetted portion, may sink and the sulphides which are not readily wetted may float off. The angle at which the mineral particles are presented to the surface of the water must be just right in order to insure the maximum flotation. The thickness of the pulp and speed of its delivery to the apparatus for flotation are important considerations.

The first attempt to work this process on a large scale was at Mill 149. The ore treated is chalcopyrite with a small quantity of pyrrhotite and pyrite and a little blende and galena, disseminated rather finely in a hard dense quartzose gangue containing spinel and garnet. The preliminary treatment of the ore at this plant is described under Mill 149, and Figs. 818*a*, *b*, and *c* illustrate the manner in which the tubes are constructed.

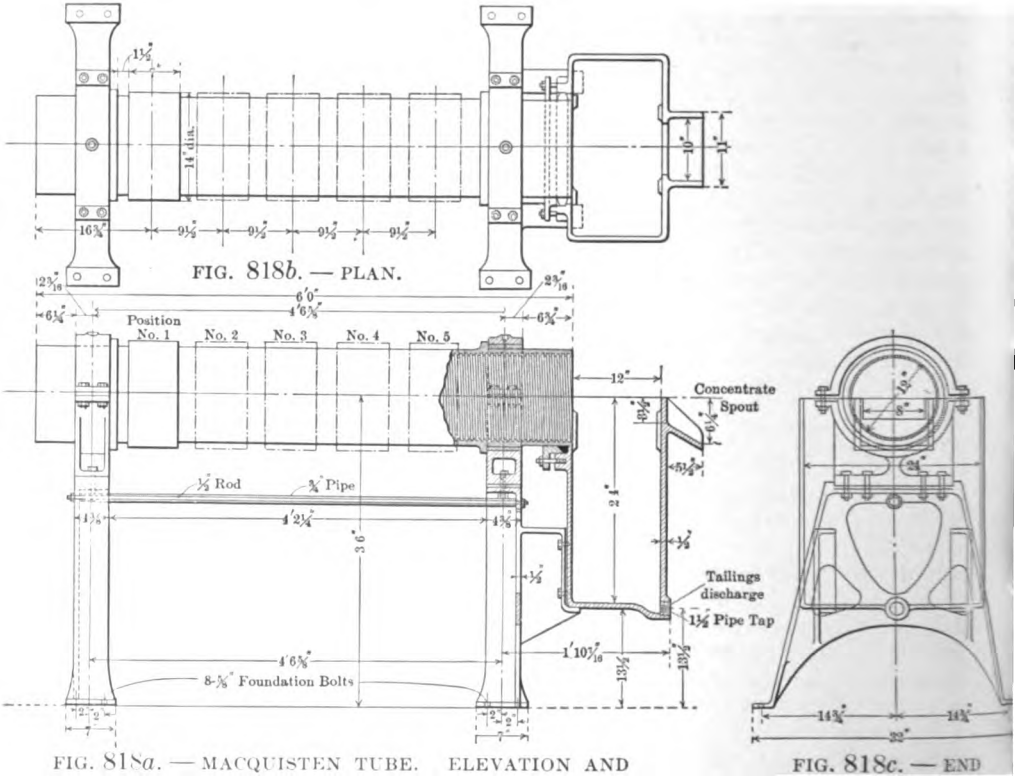

The tubes are made of cast iron. They are 6 feet in length, 1 foot in diameter, and weigh about 450 pounds each. Externally they are cast with two tires which rest horizontally on supporting rollers. The discharge end of the tube is entirely open, while the feed end is closed except for a hole in the center, large enough to admit the pipe which feeds the pulp. Internally the tube is cast with a helical groove, the form and dimensions of which are shown in the cut.

The tubes used at present have an interior helix of 1.5-inch pitch. The discharge end of the tube connects with a vessel, called the "separating box," the joint between the latter and the tube being water tight while the tube is free to revolve. At the side of the "separating box," directly opposite to the

discharge end of the tube, an opening is cut out for the overflow of the surface layer of water, carrying the floating mineral. This opening, or weir, regulates the depth of water in the tube. At Golconda the bottom of the weir is 3 inches above the bottom of the tube, inside; consequently there is 3 inches of water in the tube. The feed of pulp to the tube and the discharge of the tailings from the bottom of the "separating box" are so regulated that the water passing over the weir is about $\frac{1}{32}$ inch deep. The tubes are placed in series of two, the tailings discharged from the first tube passing to the second.

In operation the tube is rotated at 30 revolutions per minute in a direction corresponding to the helix of the interior. The pulp is thus screwed through the tube and in its advance is repeatedly given an opportunity to slide upon the surface of the water. Once this has been effected the mineral remains on the water until the latter has overflowed into the launder which spouts it into the concentrates collecting tank.

The capacity of a single tube is 5 tons per 24 hours. The ore assays from 2.7 to 3.2% in copper, is ground to 30-mesh size, and is concentrated in the ratio of 11 to 1. About 90% of the value in the material treated is saved, although this does not include the slimes which amount to nearly 30% of the original ore.

One drawback of the process is its unsuccessful treatment of the slimes. The small particles do not settle rapidly enough, and pass over the weir into the concentrates tank. Thus far it has been impossible to make more than a two-mineral separation, that is, sulphides from gangue. Mr. Macquisten is now making experiments along this line and says that some of the experiments seem to indicate favorable prospects. However, it seems improbable that the slight difference between the wetting of the various sulphides is sufficient to effect a good separation of the various sulphides on a commercial scale.

Separation by Decrepitation and Screening.

§ 1356. Separation of Zinc Blende and Barytes. — Some interesting experiments in separating barytes and blende have been conducted by George E. Raymond at the mine of the Americus Zinc and Lead Mining and Milling Company, Benton County, Missouri.[36]

At this mine, a serious difficulty in milling the ore is introduced by the presence of barytes, which is found everywhere in the mine associated with the lead and zinc ores. The barytes is a mineral having practically the same specific gravity as the blende, and on that account the usual method of cleaning, which depends upon differences of specific gravity to effect separation of minerals, is not available to remove the barytes from the zinc ore.

The method, as described by Mr. Raymond, is as follows: the charge of two wheelbarrows, about 1,000 pounds, is spread on a hearth 6 feet square and, after roasting for 10 minutes, is raked out onto the brick cooling-floor. During this exposure to the heat the barytes decrepitates and after cooling the ore is screened using a Jeffries Columbian separator, making three products; viz., on 12 mesh, through 12 mesh on 20 mesh, and through 20 mesh.

Following is a statement of the size of these products together with an estimate of the amount of each and their value at Webb City at the time when the experiments were being conducted. The prevailing zinc ore basis in Webb City for the week ending October 11, 1902, was $34 for 60% zinc ore. The average price of spelter in New York for the month of October, 1902, was 5.38 cents per pound.

Size.	Percent of Weight.	Value.
On 12 mesh,	75	$30.00 per ton or better.
Through 12 " on 20 mesh	20	$15.00 " " " "
" 20 "	5	Waste.

Ore before roasting (clean zinc ore from the mill):

Zinc = 53.40%, equivalent in ZnS to 79.6 %
Barium = 11.33 " " " $BaSO_4$ " 19.3 "
Iron = 0.61 " " " FeS_2 " 1.3 "

Ore of this grade at the mine was worth $27.40 per ton on October 11, 1902. The fines after roasting and screening assayed as follows:

Zinc = 8.19%, equivalent in ZnS to 12.2 %
Barium = 43.03 " " " $BaSO_4$ " 73.1 "
Iron = 1.00 " " " FeS_2 " 2.1 "

The ore must be cool enough so as not to damage the rubber elevator belt. A 3-hour run of the screen will clean two days' roasting.

Separation by Crushing and Screening.

§ 1357. Huntoon's Experiments. — L. D. Huntoon[35] has made a series of tests upon low-grade telluride ores which show a considerable concentration of values by a simple crushing and sizing. He accounts for the concentration as follows: "Most of the telluride gold values are deposited on cleavage planes. In crushing, these faces are first exposed and ground to fines," which may be removed by screening. The general scheme of treatment is as follows:

1. Blake Breaker. From car; delivers crushed ore to (2).
2. Dodge Breaker. From (1); delivers crushed ore to (3). Crushes to 0.25 inch.
3. Washing Conveyor. From (2) and (5); delivers to (4). The first water is introduced here.
4. Pulsating Screen, 80 mesh. From (3); delivers oversize to waste and undersize to (5).
5. Settling Tank. From (4); delivers spigot to cyanide-treatment tanks and overflow to (3).

This process can be used to advantage only in the case of relatively low-grade material which is unable to stand the high treatment charge to which these ores are usually subjected.

A number of tests were made, the results of one of which follow. This test was made on a half carload of ore which was taken from the waste dump material of the Cripple Creek District of Colorado, and was of necessity exceedingly low grade.

Table 528 shows the result of crushing to 0.25 inch and screening. Table 529 gives a screen-sizing assay test of Sample B of Table 528.

TABLE 528. — TEST 1. SUMMARY.

Sample.	Material.	Value per Ton.	Percent of Weight.	Value in 100 Tons.	Percent of Value.
A	Original	$ 4.00	100.00	$400.00	100.00
B	On 80 mesh	2.80	89.00	249.20	62.2
C	Through 80 mesh	11.20	11.00	123.20	30.8
Total and Averages		$ 3.724*	100.00	$372.40*	93.0

* Error probably in sampling or assaying A.

TABLE 529. — SCREEN TEST ON SAMPLE B, OR MATERIAL ON 80 MESH.

Sample.	Material.	Value per Ton.	Percent of Weight.	Value in 100 Tons.	Percent of Value.	Value in 89 Tons.
B	On 80 mesh	$ 2.80	89.00	$280.00	62.20	$249.20
B_1	" 10 "	2.00	71.30	142.60	50.76	126.91
B_2	Through 10 mesh on 20	5.20	10.71	55.69	19.82	49.56
B_3	" 20 " " 40	3.20	9.35	29.92	10.64	26.62
B_4	" 40 " " 80	3.60	5.63	20.27	7.21	18.04
B_5	" 80 "	10.80	3.01	32.51	11.57	28.93
Totals and Averages		$ 2.81	100.00	$280.99	100.00	$250.06

In re-crushing Sample B, with rolls, to 0.25-inch size, the results given in Table 530 were obtained.

TABLE 530. — RESULTS OBTAINED BY RE-CRUSHING SAMPLE B.

Sample.	Material.	Value per Ton.	Percent of Weight.	Value in 100 Tons.	Percent of Value.	Value in 89 Tons.
B	On 80 mesh	$2.80	100.00	.....	.....	$249.20
B_6	Re-crushed on 80 mesh	2.55	97.00	.....	.....	220.27
B_7	" through 80 mesh	10.80	3.00	.....	.....	28.93
Totals and Averages		$2.80	100.00	.....	.....	$249.20

B_7 is 3 percent of 89 tons or 2.68 tons.

If now we combine B_7 of Table 530 with C of Table 528, we get the final summary of results shown in Table 531.

TABLE 531. — FINAL SUMMARY OF CRUSHING AND SIZING CONCENTRATION TEST.

Material.	Value per Ton.	Tons.	Value.	Percent of Value.
Total through 80 mesh	$11.12	13.68	$152.13	38.0
Total between 0.25 inch and 80 mesh	2.55	86.32	220.12	55.0
Loss through sampling or assaying	.....	.....	27.75	7.0
Totals and averages, or A	$3.724	100.00	$400.00	100.0

§ 1358. MOLYBDENITE DRESSING. — The rapidly increasing use of molybdenum in the manufacture of self-hardening tool steels, armor plate, armor-piercing projectiles, large guns, motor-car steel, magnet steel, etc., has necessitated the discovery of some method by which low-grade molybdenum ores may be concentrated so as to contain at least 50% molybdenum, since ores less rich than this cannot be profitably smelted.

Molybdenite, the principal ore, occurs almost invariably associated with igneous rocks, or their derivatives, and commercial deposits have been found only in pegmatite and quartz veins, usually in connection with granites.

Up to the last year or two methods of dressing molybdenite were confined solely to hand picking of the ore, but of late several mechanical processes have been devised which have proved quite successful on an experimental scale and which without doubt can be applied commercially.

The experiments of J. W. Wells, of the Kingston School of Mines,[39] have given good results. The principle of his method is simple in the extreme and depends upon the fact that when the ore is passed through rolls, the molybdenite does not become pulverized, but is separated into flakes while the gangue is crushed. A sample of ore carrying 50% pyrrhotite, 10% pyrite, 6.5% molybdenite, in addition to calcite, biotite, quartz, and pyroxene, was treated as follows:[44]

The ore was crushed in a jaw breaker, and the product hand picked to remove large scales of molybdenite. The residue was re-crushed in rolls set to a 0.2-inch space. The material through the rolls was sized on a screen with 0.2-inch holes and yielded 1.4% of material consisting principally of flakes of molybdenite and biotite. After a second screening through a screen with 0.1-inch holes a further 1.54% of material of similar content was obtained. The two oversizes in each case contained about 55% molybdenite and 45% biotite. This material was treated on a Wilfley table and yielded a commercial product; but the best method found to separate these two minerals was to remove the biotite by means of a Wetherill magnetic separator. In this way a concentrate carrying 90 to 91% molybdenite was obtained; but, due to the slow speed necessary and high current used, it is doubtful if this method would be commercial. Harz jigs would not concentrate the ore; and a treatment by a modified form of the Elmore process was only partially successful as the larger flakes of molybdenite were not affected by the oil. A sample of ore carrying 2.5% molybdenite in a quartz and feldspar gangue was crushed and sized, but failed to yield clean ore on any of the screens. The whole sample was then crushed to pass 0.05 inch and concentrated on a Wilfley table, the final concentration being effected by the oil process. Mr. Wells' experiments showed that no standard method could be adopted for concentrating molybdenite ores. Separate mill-tests are required in each case.

Bibliography for Miscellaneous Processes of Separation.

1. American Concentrator Company, Joplin, Missouri. Pamphlet on Knowles' New Century Magnetic Separator.
2. American Gröndal Kjellin Company. Private communication.
3. *Am. Inst. Min. Eng.*, Vol. XXXIX., (1908), p. 72. Erminio Ferraris. The Mechanical Preparation of Ores in Sardinia.
4. *Australian Mining and Metallurgy.* By Donald Clark. Discussion of Potter and Delprat Flotation Processes versus Magnetic Separation in Australia. Pages 397, 402, and 431.
5. *Aust. Min. Standard*, August 11, 1906. Clark. The Delprat Process of Concentrating Ores.
6. *Ibid.*, The Potter Process of Ore Separation.
7. *Ibid.*, August 18, 1906. Clark. Magnetic Concentration at Broken Hill, Australia.
8. *Ibid.*, June 17, 1908, p. 640. Williams, Gerard W., of Laverton, West Australia. Metallurgy of Broken Hill.
9. Bilharz, O. M., of Flat River, Missouri. Private communication.
10. *Can. Min. Inst.*, Vol. VII., (1904), p. 270. Snyder, F. T. History and Development of the Art of Magnetic Separation.
11. *Ibid.*, Vol. X., (1907), p. 261. McBennie, P. Magnetic concentration of Iron Ores by the Gröndal Process.
12. Canadian Report on Asbestos, its Occurrence, Exploitation, and Uses. By Fritz Cirkel. Page 67.
13. Canby, R. C., of El Paso, Texas. Private communication.
14. Dings Electro-magnetic Separator Company, Wilwaukee, Wisconsin. Catalogue and private communication.
15. *Electrochemical and Metallurgical Industry*, Vol. IV., (1906), p. 49. Ore Dressing by Flotation. An abstract of papers by Swinburne, Rudorf, and Huntington upon the theory of flotation.
16. El Paso Foundry & Machine Company, El Paso, Texas. Private communication.
17. *Eng. & Min. Jour.*, Vol. LXXXI., (1906), p. 75. No author. The Ball and Norton Magnetic Separator.
18. *Ibid.*, p. 893. Canby, R. C. The Sutton-Steele Process.
19. *Ibid.*, p. 1082. Granberry, J. H. Magnetite Deposits and Mining at Mineville, N. Y.—IV.
20. *Ibid.*, Vol. LXXXII., (1906), p. 152. Staff correspondence. Ore Milling in Wisconsin.
21. *Ibid.*, p. 344. No author. The DeBavay Process.
22. *Ibid.*, Vol. LXXXIII., (1907), p. 317. Delprat, G. D. Ore Dressing at Broken Hill.
23. *Ibid.*, p. 613. Trego, Frank J. Roasting for Magnetic Concentration of Zinc Ores. A comparison of work of cylindrical furnace commonly used in Southwestern Wisconsin with that of New Circular Table Roaster.

24. *Ibid.*, p. 800. Walker, Edward. The Elmore Vacuum Flotation Process.
25. *Ibid.*, p. 889. Peterson, G. Walfrid. Magnetic Separation of Iron Ore in Sweden.
26. *Ibid.*, p. 908. Elmore, Alexander Stanley. Vacuum-Flotation Process for Concentration.
27. *Ibid.*, p. 1205. Prentiss, F. H. The Elmore Vacuum Flotation Process.
28. *Ibid.*, Vol. LXXXIV., (1907), p. 441. Special correspondence. The Question of Riffles.
29. *Ibid.*, p. 765. Ingalls, Walter Renton. Concentration Upside Down. Macquisten process.
30. *Ibid.*, Vol. LXXXV., (1908), p. 453. McClave, J. M. The Wilfley Roaster.
31. Firmstone, Frank, of Easton, Pennsylvania. Private communication.
32. Freid Engineering Company, Orange, New Jersey. Catalogue and private communication.
33. Fried. Krupp A. G. Grusonwerk, Magdeburg-Buckau, Germany. Catalogue.
34. Huff, C. H., of Boston, Massachusetts. Private communication with regard to electrostatic separation.
35. Huntoon, L. D., New Haven, Connecticut. Private communication.
36. Hutchinson, W. Spencer, Boston, Massachusetts. Private communication.
37. International Separator Company, Chicago, Illinois. Private communication.
38. *Iron Age*, Vol. LXXVI., (1905), p. 1367. No author. Ball and Norton Belt Type Magnetic Separator.
39. *Mineral Industry*, Vol. XI., (1902), p. 477. Molybdenum.
40. *Ibid.*, Vol. XIII., (1904), p. 329. Molybdenum Mining in Foreign Countries.
41. *Mines & Minerals*, Vol. XXV., (1904), p. 178. Clark. Magnetic Concentration at Broken Hill, Australia.
42. *Ibid.*, The Delprat Process of Concentrating Ores.
43. *Ibid.*, The Potter Process of Ore Separation.
44. *Min. & Sci. Press*, Vol. LXXXVIII., (1904), p. 135. Value of Molybdenum Ores.
45. Morse, P. S., of Cockle Creek, Boolaroo, New South Wales, Australia. Private communication.
46. Moulden, J. C. Private communication.
47. Ore Concentrating Company, Denver, Colorado. Catalogue.
48. Report of the Commission appointed to investigate the zinc resources of British Columbia and the Conditions Affecting their Exploitation. By Walter Renton Ingalls.
49. Root, Ralph, of Hazel Green, Wisconsin. Private communication.
50. Rowand, Lewis J., of Franklin Furnace, New Jersey. Private communication.
51. Steele, E. Goodwin, of Dallas, Texas. Catalogue and private communication.
52. The Blake Mining and Milling Company, Denver, Colorado. Pamphlet and private communication.
53. The Electric Controller and Supply Company, Cleveland, Ohio. Catalogues and private communication.
54. The Humboldt Engineering Works Company, Kalk near Cologne, Germany. Catalogue.
55. United Iron Works Company, Springfield, Missouri. Catalogue and private communication.
56. United States Reduction Company, Seattle, Washington. Catalogue.
57. Wentworth, Henry A., of Boston, Massachusetts. Private communication.
58. Wheeler, H. A., of St. Louis, Missouri. Private communication.

CHAPTER XL.

ACCESSORY APPARATUS.

§ 1359. Under this head are described bins, feeders, conveyors, pumps, dewatering wheels, launders, cyanide machinery, dryers, and other appliances which, while not falling under any heading heretofore made, are of sufficient importance to warrant mention being made of them.

Bins.

§ 1360. Concentrate Drying Bins.[13] — Figs. 819 *a* and *b* show side and front elevations of the concentrate drying bin in use at Mill 100. Steam coils as shown in Fig. 819*a* are introduced at intervals as at (1), (2), (3), and (4), Fig. 819*b*. Steam is introduced at (5) and the condensed steam passes into the drain at (6). Gates (7), (8), (9), and (10), are provided for discharging the concentrates. With this arrangement the moisture in the concentrates is reduced to 5%.

§ 1361. Filter Bins. — At Leadville, Colorado,[25] and elsewhere, filter bins for receiving Wilfley table products are being used to a considerable extent. These bins are constructed of plank without any attempt to make tight joints. They are lined on the inside with burlap through which the water can percolate, leaving the fine concentrates behind. When one has a mixed ore requiring further treatment these bins are excellent things.

Samplers.

§ 1362. Hand Sampling. — A number of devices for hand sampling have been described in Vol. II., pages 844 and 845. Of the methods of sampling there discussed, the ones most generally used to-day for taking representative samples of a lot of ore without recourse to mechanical samplers are those of fractional selection by shovel and fractional selection by split shovel, riffle, and Jones sampler. The method of coning and quartering, formerly much in vogue, is to-day generally discarded by reason of its inherent errors. Grab samples, pipe samples, etc., should not be depended on when means of obtaining an accurate sample are applicable.

At the Sweeny mill of the Federal Mining and Smelting Company,[9] a device is used for cutting down both mine and mill assay samples which possesses points of sufficient interest to make it worthy of mention in this place. The device consists of a cabinet as shown by the plan and elevation in Figs. 820*a* and *b*.[20] This cabinet is made from 2 × 4-inch sticks and 1-inch boards and has three compartments, one for concentrates, one for mine samples other than first class, and one for tailings. Each compartment has two riffles (see Fig. 820*d*), made of 15-gauge sheet brass. If we look at Fig. 820*c* which shows an end elevation of the cabinet the mode of operating can be made clear. At the top of the cabinet is a shelf (1) for setting pans containing the ore to be

cut down. Resting on the cross pieces *a* and *b* at the front of the cabinet are placed the brass riffles mentioned above. The ore to be cut down is placed in one pan and an empty pan placed on shelf (2) under the riffles. The ore is

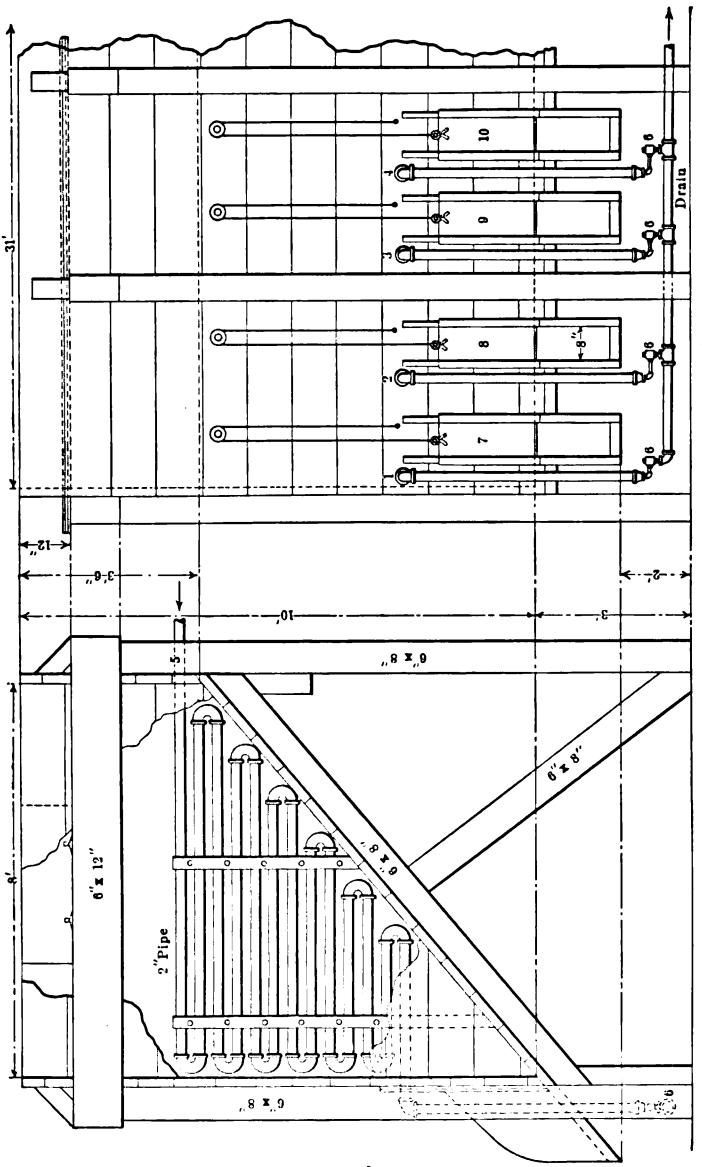

FIG. 819 *b*. — FRONT ELEVATION.

FIG. 819 *a*. — SIDE ELEVATION OF DRYING BIN AT MILL 100.

then thrown in a flat stream against the riffles. The pan in the hand, when empty, is substituted for the full one on the shelf and the operation is repeated until the sample is of the desired size for bucking. This arrangement has been found to be both rapid and accurate as well as being a great labor saver.

§ 1363. MECHANICAL SAMPLERS. — The mechanical samplers most used

to-day are the Vezin, Snyder, and Brunton samplers. These devices will be found described in Vol. II., pages 846 and 847.

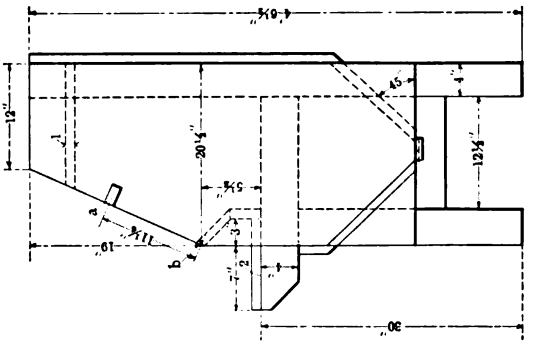

FIG. 820c. — END ELEVATION.

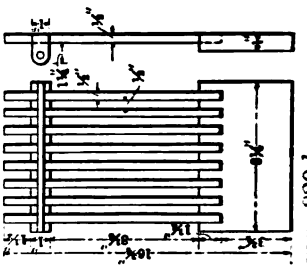

FIG. 820d. — RIFFLE.

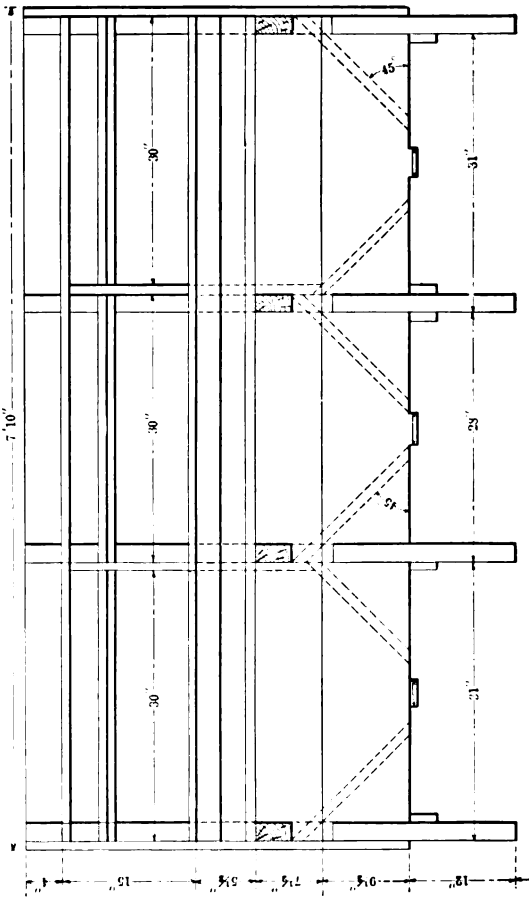

FIG. 820a. — FRONT ELEVATION OF RIFFLE CABINET.

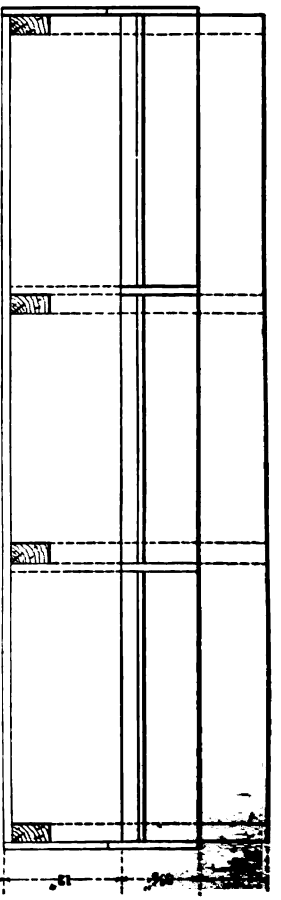

FIG. 820b. PLAN.

§ 1364. Argall,[26] discussing the use of the Vezin sampler which he considers to be the standard sampling device, states that 3 feet per second, at the

point where the center of the ore stream strikes, or 20 revolutions per minute, is the proper speed. The Vezin sampler at this speed, with two 12.5% cutters, 180° apart, will make 40 cuts per minute. If the ore comes in a steady stream, at a velocity of 8 feet per second, this would cut out 40 sections of the stream, each 3 feet long, or 120 feet in all, while the rejected portion would be 40 sections, each 9 feet long, or a total of 360 feet.

The Vezin sampler can be safely used for gold ores running 8 ounces per ton and with 3-inch cubes as follows: Out of 100 tons with maximum size 3-inch cubes, cut say, 33%. Crush this sample to 0.75 inch and cut it down to 4 tons. Then crush and sample down as desired. Ore for chemical treatment can be crushed to 0.5 inch before sampling. Rich telluride ores running from 10 to 15 ounces gold per ton can be easily and accurately sampled automatically. They were formerly considered difficult to sample with the coning and quartering method. In sampling this grade of gold ores automatically, the ratio between the average size of the ore cubes and proportional weight of the sample, shown in Table 532, is found to give accurate results:

TABLE 532. — SCHEME FOR SAMPLING RICH ORES WITH VEZIN SAMPLER.

	Inches.	Percent.	Pounds in 100 Tons.
Maximum size of cubes	1.00	Sample 20 percent	40,000
" " " "	0.25	" 1.25 "	2,500
8 mesh	0.0625	" 0.0785 "	157
30 "	0.0171	" 0.005 "	10

As a matter of extra precaution, however, in practical work, one would take larger quantities of the finer material than those indicated in the above table. The 10 or 15 pounds of 30-mesh material is passed through the sample grinder, reducing it to, say, 90 to 100 mesh. This is riffled down to one pound and ground on the bucking-board to pass 120 mesh No. 40 brass wire or about 0.004 inch. It is found to be much easier to duplicate assays at this mesh than at 100 mesh. The 120-mesh ore is then put into four envelopes, one for the seller, one for the purchaser, one sealed by both parties for umpire, and the fourth simply held as a reserve.

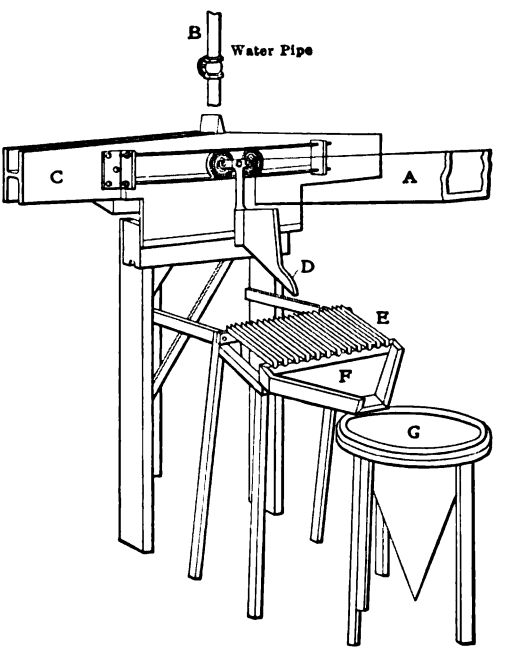

FIG. 821. — THE LAMB AUTOMATIC TAILINGS SAMPLER.

§ 1365. THE LAMB AUTOMATIC TAILINGS SAMPLER. — Fig. 821 shows an automatic tailings sampler manufactured by Allis-Chalmers Company.[1] *A* represents a section of a tailings sluice running out of the mill, *C* is a tilting box receiving water through the pipe *B* and divided into two compartments by a central partition. This tilting box

is provided with a track upon which the sampling device *D* runs. As the weight of water in one end of the trough *C* equals or slightly exceeds the weight of the traveling trough *D*, that end descends and allows the trough *D* to pass through the stream discharging from the tailings sluice, cutting out an equal amount from all parts of the stream. The sample so obtained falls immediately upon the riffle *E*, part passing between the riffles and the rest passing by way of the apron *F* into the filter sack *G*. By regulating the supply of water from pipe *B* the sampler may be made to operate at any desired interval.

With this sampler placed below the final discharge of tailings and enclosed in a small building under lock and key, it can be made accessible to but one person and accurate samples of the mill tailings obtained.

§ 1366. PRINCIPLES OF SAMPLING. — A few points[26] to be remembered in machine sampling are:

(1) Take out a sufficient amount in the first cut to accurately represent a thorough sample at that size. Where the ores are of low grade, or very uniform in composition, a small sample will suffice.

(2) Always crush and thoroughly mix the ore between each cut, unless it is already quite fine, and in this case the greatest possible care must be exercised in thoroughly mixing before making the second cut. The very essence of ore sampling is never to cut or reduce the ore a second time without first crushing to a degree of greater fineness. Example: Assume a lot of ore crushed to cubes of 1-inch average size, and that 25% is necessary to give a correct sample at this size. Now if this sample is reduced 50% without re-crushing, it simply amounts to taking out 12.5 per cent in the first cut, which, with 1-inch cubes, we have found to be 50% too small to give a correct sample.

Mixing comes next in importance, more especially for spotted ores. When the sample is crushed in rolls and elevated to the cutter, the mixing is found to be sufficient, provided there is a steady feed to the rolls so that a uniform stream passes the cutters without intermission or break.

(3) Use riffles for reducing the size of samples after leaving the last automatic sampler.

Alternate shovel sampling is far more accurate, easy, and cheap than "coning and quartering." Suppose one has 10,000 pounds to be sampled. By alternating shovels the workman will make 1,000 cuts to half the quantity as against two cuts by "coning and quartering." The disadvantages of "coning and quartering" are that the fine material always forms the apex of the cone while the coarse particles find their way towards the perimeter. It is well-nigh impossible to keep the cone truly vertical, and in this we have the first source of error. The next stage is leveling off the cone to form a cake of ore of uniform thickness and equal diameters at all points of the perimeter; and lastly, dividing the ore cake into quarters, taking opposite ones for samples, and rejecting the others. There are many sources of error in the method.

The assays made by men representing the seller and purchaser of the ore are expected to agree within 0.04 ounce and in that case the mean is taken as the correct value. In case the assayers do not check within the four points on the first trial, each repeats his work and if they do not come within 0.04 ounce this time, the umpire sample is sent out. If this comes anywhere between the assays, it is accepted; if outside, rejected; and the ore would then be settled for on the nearest assay.

The assays for the purchase and sale of ores are called "controls." They are run in duplicate using 0.5 assay ton. The assay is reported on the mean of the two buttons. For umpire assays the mean of 4 buttons, using 0.5 assay-ton samples, is taken.

§ 1367. The following general ideas on the subject of sampling have been furnished by D. W. Brunton [10] and constitute answers to queries with regard to sampling that have arisen in his business.

§ 1368. *Difficulties Attending Sampling.* — The most difficult ores to sample are those in which precious metal values occur as native metal or in small quantities of very high-grade material carried in a barren gangue. When the native metal or high-grade mineral occurs in large masses or crystals, the difficulty of obtaining concordant results is much greater than when the values are finely disseminated through the mass of the ore. Of such ores the most difficult to sample correctly are those which show the greatest contrast between the assay values of their largest particles. In this class belongs also any ore which, as received at the sampling works, may not show greatly contrasting values in its largest particles, but which, after a varying fineness of crushing, shows extreme variations. Such an ore frequently contains extremely rich particles which crack off as crushing proceeds, giving at some point a product consisting of equally sized particles of nearly pure gold and barren rock. If a sufficiently large sample is not taken, even after such an ore has been crushed to 8 or 10 mesh, it may easily happen that two samples will vary by 10, 20, or even a greater percentage.

§ 1369. *Requisites to Accuracy.* — The first requisite to accuracy in sampling is that the sample and reject shall be uniform in composition at each stage in the process of division. This necessitates perfect mixing, accurate division, and thorough cleanliness during the entire operation. Between each cutting down of the sample, the sample should be re-crushed sufficiently so that the ratio of the diameter of the largest particles to the weight of the sample to be taken shall not exceed a certain safe proportion. On the supposition that the mixing and division of the ore are carried on so perfectly as to realize the above conditions, the possible limit of error in each case is the ratio between the weights of the sample and the weight of the coarsest high-grade particle contained therein. This is evident from the fact that no amount of mixing and careful division can make the sample and reject alike in value when the lot before division contains an uneven number of large high-grade ore particles.

When using the Brunton oscillating sampler, care should be taken to see that the intake is vertical. The cutting edges on the sample spout should be parallel and the distance between the centers of the cutting edges should be three and one-half times the diameter of the coarsest particle in the product to be sampled. The shafts and connecting rod should be close fitting so as to avoid all possibility of lost motion. In the case of the Vezin sampler the intake should be either vertical or tangent to the circle of movement of the sample cutter. The sides of the sample spout should be in planes of radii of the circle of revolution and also in vertical planes so as to prevent any narrowing of the spout as the sides wear down.

§ 1370. *Moisture Samples.* — Grab samples do not afford an accurate means for determining the moisture in ore. Moisture samples should be taken automatically during sampling, and preferably after the ore has been crushed to ⅜-inch cube or less. To the moistures so taken must be added a certain percent to make up for the water dried out during the passing of the ore through the mill and to the point where this moisture sample is taken. This must be determined experimentally for each ore or class of ore, by drying several hundred pounds of crude ore for a test. This constant should be slightly greater in summer than in winter, and also depends upon whether the ore is weighed before or after sampling.

§ 1371. *Size of Samples.* — When shovel sampling, the smallest sample that could be taken to represent 20, 40, and 60-ton lots depends largely upon the

character of the mineral carrying the precious metal values. When the value-carrying mineral breaks up fine, it is obvious that a smaller sample will suffice than where the value-carrying mineral is as hard as the enclosing rock and is liable to be found in large pieces. Under the latter conditions nothing less than a 5-ton sample could be considered even approximately safe. On run of mine ore not less than 10, 20, and 30 tons respectively should be taken. If crushed to 2-inch cube, $\frac{1}{2}$, $\frac{1}{2}$, and $\frac{1}{3}$ of the total tonnage should be taken, with finer crushing before cutting down further. Table 533 gives the minimum weight of samples of various sizes, the ratio of the weight of the largest cube to the weight of the sample, and the effect upon the value caused by one cube assaying $100,000 per ton and having a specific gravity of 5.

TABLE 533. — SMALLEST PERMISSIBLE WEIGHT FOR SAMPLES OF GIVEN SIZE.

Size. Inches Cube or Mesh.	Weight of Sample Pounds.	Ratio of Weight of Largest Cube to Weight of Sample.	Effect on Value Created by one Cube Assaying $100,000 a Ton, Specific Gravity 5.
2 Inches	10,000	1 to 7,000	$14.42
1½ "	5,000	1 " 8,300	12.17
1 "	2,000	1 " 11,000	9.00
¾ "	1,000	1 " 13,000	7.50
½ "	400	1 " 18,000	5.62
⅜ "	300	1 " 31,000	3.17
¼ "	200	1 " 71,000	1.40
⅛ "	100	1 " 83,000	1.20
⅛ "	75	1 " 220,000	0.44
6 Mesh	50	1 " 430,000	0.23
10 "	25	1 " 930,000	0.107
18 "	10	1 " 1,900,000	0.051
30 "	4	1 " 4,200,000	0.023
50 "	1	1 " 5,500,000	0.018

Table 533 has special reference to gold ores. On silver ores one-tenth of the sample weight given in the table is considered sufficient.

After going through the rock breaker and passing into the rolls, each successive set of rolls cannot be expected to reduce the diameter of the cubes to less than $\frac{1}{2}$, or in other words, to $\frac{1}{8}$ of their weight. Thus a 12½% sample would maintain the same number of ore particles as were in the original lot, but as there is a greater possibility of finding a piece of high-grade mineral in the small than in the large sizes, it is probably not safe to take less than 20% for a sample.

In shovel sampling it very often happens that when every fifth shovelful is taken from the sample, the sample does not finally weigh one-fifth as much as the original lot, and in fact varies more than 10% from so doing. This may be due to two causes and the question as to how the sample will be affected depends largely upon which of these two causes has brought about the discrepancy. If it is due merely to a mistake in counting, the sample is not necessarily invalidated thereby. If, however, the shoveler has taken a smaller shovelful when throwing into the sample bin than he has when throwing into the reject, the sample is thereby invalidated, since in shoveling from a pile there is usually more fine material on the point of the shovel than on the heel, and as a consequence a larger proportion of fine ore is obtained than of the coarse ore.

§ 1372. *Winnowing Effect of Air Currents.* — The effect of air currents upon a stream of falling ore may be negligible or very considerable, depending upon the size of the ore, the mineral contents, whether the ore is wet or dry, and the velocity of the air currents. The quotient of the pressure due to a current of air on any given particle divided by the weight of that particle gives the tangent of the angle of deflection from the vertical; a fresh breeze, 12½ miles per hour, will deflect to an angle of 45° all sylvanite of 30 mesh and under, which

would, of course, impoverish the sample very materially; in the later stages where so much of the sample would be of smaller size the effect of even a much slower current would be decidedly appreciable. As this is a matter of considerable importance, careful tests should be made to determine the effect of this factor wherever there is a chance of its affecting the accuracy of results.

§ 1373. *Cleaning Mill Between Lots.* — Cleanliness in all of the sampling operations is an essential to the obtaining of correct results. Care must be taken to assure that the results are not vitiated due to the salting of the ore by an ore previously run. If it is found by experiment that movable material accumulates in the boot of an elevator in sufficient amount to affect results, the elevator boots must be carefully cleaned between each lot run. In case a sample is taken before the ore reaches an elevator, the elevator should certainly be cleaned and the cleanings cut down to the same percentage as the sample and added thereto. This can usually be done by carrying the material to the head of the elevator and letting it fall through the crusher and sampling machinery, following the same path as the original lot. In order to insure a correct valuation of an ore, each pair of rolls should be carefully brushed after each sample is run, the material caught in an oil cloth, weighed, and sampled. If the sample is to be representative of the ore as weighed out, only those rolls following the sample cutting need be cleaned.

§ 1374. *Limit of Automatic Sampling.* — As the elimination of the personal element in sampling is always desirable, automatic sampling should be employed at every stage from the ore car to the sample sack wherever this is possible. The importance of greater care as to cleanliness with the necessarily smaller sample, and the loss on account of the fineness of the material, are the greatest drawbacks to mechanical sampling in the later stages; the point to which mechanical sampling should be carried depends upon the mechanical perfection of the devices employed principally as regards the two points mentioned.

§ 1375. *Coning and Quartering.* — Cornish quartering cannot be so carried on as to give an accurate division of the ore. If, owing to the absence of automatic sampling machinery, Cornish quartering must be employed, certain accessories must be used, and certain precautions observed to obtain approximately accurate results. The coning and quartering should be carried out on a smooth steel floor. Care should be taken primarily to properly distribute the material, more particularly with respect to coarse and fine, from all directions to the apex of the cone; if thrown from a shovel it should be from two or four directions at right angles to each other so that each quarter or pair of quarters shall receive its proper benefit from the assortment of coarse and fine. The cone should be flattened so that each quarter shall contain the material originally in it; and with the same object, the lines dividing the quarters should be at right angles with their intersections directly under the original apex of the cone. A steel cross or quartering plate may assist greatly in this. If these directions are followed out and coupled with honest intentions on the part of the operator and sufficiently fine crushing the results obtained should be at least approximate.

§ 1376. *Cutting down Crushed Ore from Sample Rolls.* — The most accurate and rapid method of cutting down the crushed ore from the sample rolls is by a sampler of the same type as the well-known Jones sampler. Taylor and Brunton make a horizontal riffle (see Fig. 822) which is claimed to give better results than the Jones and is certainly easier to keep clean. A horizontal riffle, to give accurate results, should have splitter divisions, uniform in size, with bottoms sufficiently steep to allow ore to flow freely. The sample should be mixed before re-cutting and should not be poured fast enough to crowd the

splitter openings. When pouring, employ a horizontal movement at right angles to the axes of the grooves of the splitter so as to insure a cross-section sample instead of a longitudinal sample. The sample rolls should crush the sample to 8 or 16 mesh and this should be cut down to from 15 pounds in the case of 16 mesh to 50 pounds in the case of 8 mesh for feed to the sample grinders.

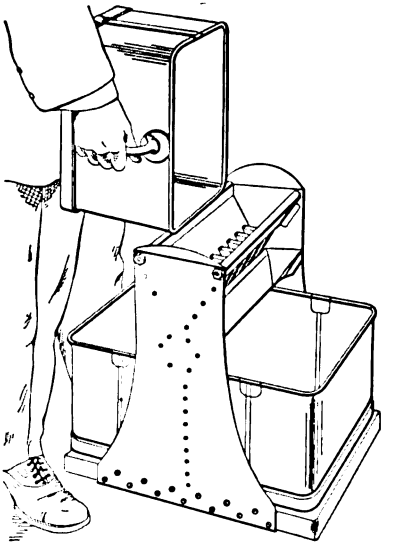

FIG. 822. — TAYLOR AND BRUNTON SAMPLE RIFFLES.

§ 1377. *Bucking the Sample.* — On some rich ores, a cone grinder or bucking board is capable of picking up a very considerable amount of values. As a result of this, before grinding another sample both the cone grinder and bucking board should be cleaned with barren quartz or slag.

§ 1378. *Cutting down Ground Pulp.* — The Taylor and Brunton horizontal riffle, with ¼-inch riffles, furnishes a ready means for cutting down the ground pulp.

§ 1379. *Storing Samples.* — Samples should never be stored in sacks. Rust-proof tin or galvanized-iron receptacles with dust-proof covers furnish the best means of storing samples.

FEEDERS.

§ 1380. CHALLENGE FEEDER. — The Challenge feeder as made by the Allis-Chalmers Company and described in Ore Dressing, Vol. II., page 853, is still in general use among the mills. The Allis-Chalmers Company is now making an improved Challenge feeder known as the Simplex ore feeder. This differs from the Challenge feeder only as regards the friction drive. Several new forms of automatic feeders will next be described.

§ 1381. THE PERFECTION ORE FEEDER, manufactured by the Dillon Iron Works Company,[14] is illustrated by four cuts. Figs. 823*a* and *b* show section of

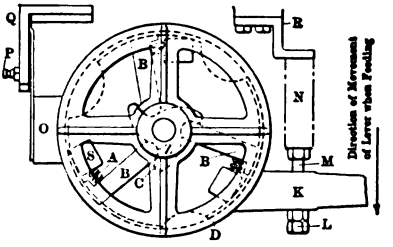

FIG. 823*a*. — DRIVING DISCS OF PERFECTION ORE FEEDER.

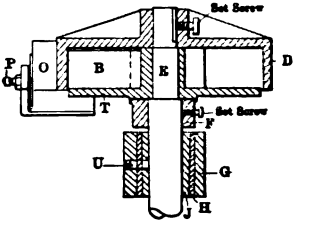

FIG. 823*b*. — SECTION.

driving discs and the style of bearing used on the upright shaft carrying the feed table. Figs. 823*c* and *d* show the belt-driven type of feeder.

In Figs. 823*a* and *b* the flange disc *D* and feed table *V* are fast to the shaft *E*.[15] (See also Figs. 823*c* and *d*.) Consequently when *D* moves *V* also moves. The disc *T*, with three sockets *C* for toggles *B B B*, and three sockets *S* for springs *A*, is free to revolve on shaft *E*. *F* is a collar fast to the shaft *E* which merely holds *T* from slipping down on shaft *E*. *B*, *B*, *B*, are blocks of wood (or wooden

toggles) dropped into sockets C in T, and pressed against the inner periphery of D by springs A. K is a lever, fast to T, which is moved in the direction indicated by the arrow by the cam W in a belt-driven feeder or a lever in a tappet-

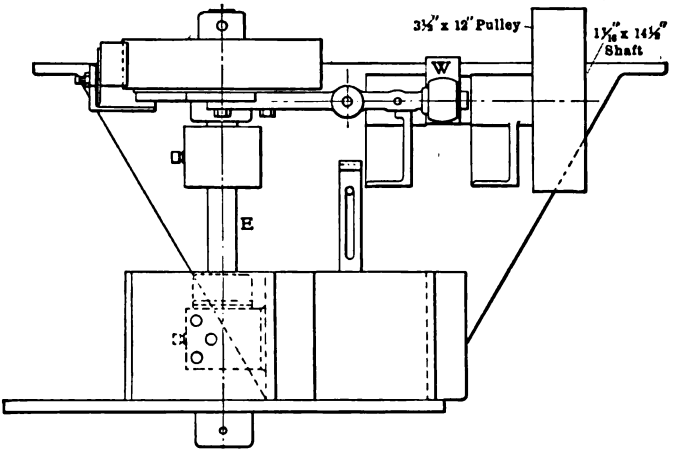

FIG. 823*c*. — ELEVATION OF PERFECTION ORE FEEDER.

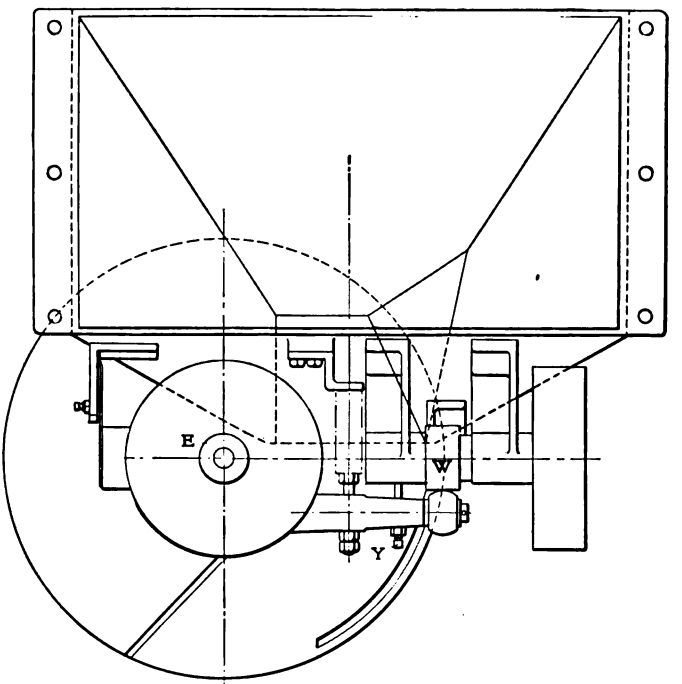

FIG. 823*d*. — PLAN.

driven feeder. The lever K is in either case pulled back by the spring N, the tension on which is regulated by adjusting the nuts L. The length of stroke of K is regulated by screwing in or out the set screw Y, which regulates the

distance through which the spring N can pull back the lever K. O is a wooden brake-block carried on a spring piece. O bears on the outer periphery of D and prevents any slip when the toggles B let go of the inner periphery of D on the back stroke when the shaft E and the table V remain stationary, and no feeding takes place. Block O bears against the outer periphery of D at all times, but the resistance it offers to the movement of D during the feeding stroke is so slight as to be negligible. P is a set screw to adjust pressure of O on D through the spring piece by which O is held; Q and R are the brackets attaching the block O and the spring R to the frame of the feeder; J is a bored cast-iron shaft-bearing, held in place removably by the babbitt H and firmly locked in place by the oil pipe which screws in at U; G is the lug cast on the frame of the feeder to carry the bearing J. The blocks B are longer than the radial distance from the point Z to the inner periphery of D. When the lever K is

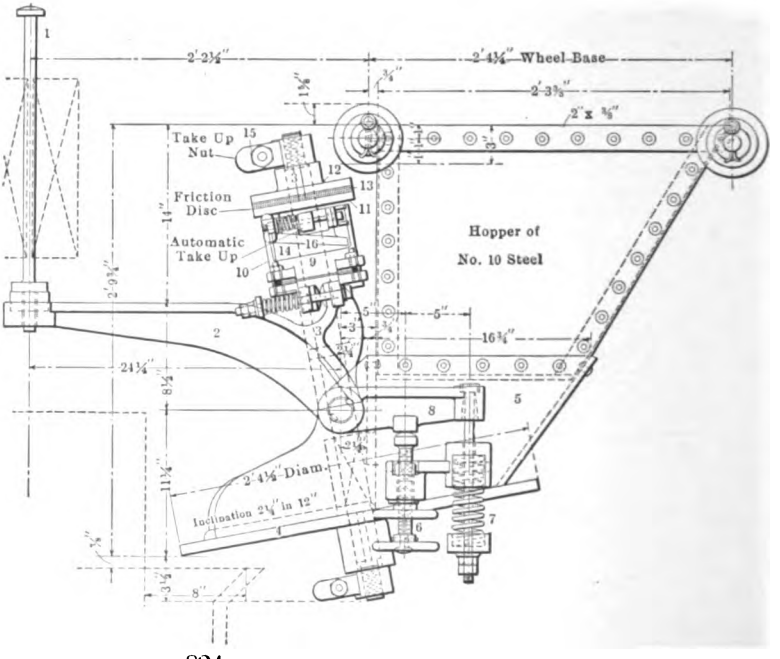

FIG. 824. — PERFECT FEEDER. ELEVATION.

moved by the driving mechanism in the direction indicated by the arrow, the inner periphery of the disc D is gripped by the toggles B, and moves with T, thus revolving the feed table V through the shaft E. When the lever K is pulled back by the spring N, the toggles B let go of the inner periphery of the disc D. The disc D then remains stationary while the lever K and the disc T are pulled back by the spring N ready for the next stroke. Both grip and release are instantaneous, the slightest movement of the lever K in a forward direction moving the table V, and the grip is so positive that with two men pulling on the edge of the table V the grip of the toggles does not slip. The toggles are made of wood, faced on the ends where they touch the inner periphery of D with leather.

§ 1382. THE COLORADO IRON WORKS COMPANY[12] makes a feeder of the Challenge type which is shown in Fig. 824. While as to the intermittently revolving disc and the stationary wings it is identical with the Challenge

pattern, it is radically different in other respects. In this feeder the use of gears is dispensed with, the motion of the lever shaft being transmitted to the vertical shaft by means of arms with ball faces flexibly connected. At the lower part of the feeder may be seen the retracting lever (8) with its spring (7) and the hand-wheel adjustment (6) for regulating the stroke of the bumper rod (1) without altering the position of the feeder tappet on the stamp stem.

The friction clutch is placed on the vertical shaft (3), and consists of two discs, the upper one (12) being fast to (3) and separated from the lower one (11) by a friction washer (13) cut from 8-inch rubber or leather belting. The lower friction disc (11) has a hub which extends downward into a casing (10) which hub terminates in an inclined operating-face. Against this face a cor-

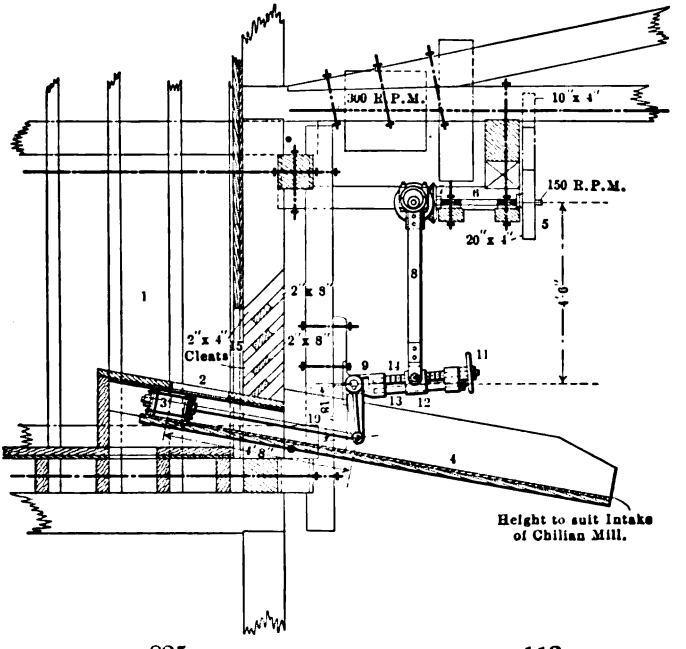

FIG. 825. — PUSH FEEDERS AT MILL 113.

respondingly inclined or wedge-shaped block (9) operates to force the friction faces together with a very heavy pressure, thus transmitting the rotary motion to the feed plate (4), and at the same time instantly releasing on the return stroke, without the use of any brake. As the rubber friction-washer gradually wears down, the lost motion is compensated by the automatic take-up device (14), seen at the top of the clutch casing — its condition being indicated by the projecting lug (16). When this lug has reached the limit of its travel it is only necessary to adjust the split nut at the upper extremity of the vertical shaft, which can be done without stopping the operation of the feeder.

The only part which requires renewal after a long continued usage is the rubber friction-washer, which can be replaced in a few minutes and without backing the feeder away from the mortar.

§ 1383. PUSH FEEDERS. — Push feeders are finding an extended use in the mills. Fig. 825 shows a form of push feeder used at Mill 113 for feeding Chili mills.[23] The ore already broken to 1-inch size passes from the bin (1) through the opening (2) whence it is pushed by the plunger (3) down the feed

spout (4). Reciprocating motion is transmitted to the plunger (3) by means of the pulley (5), shaft (6), bevel gears (7), eccentric and eccentric rod (8), bell-crank lever (9), and connecting rod (10). A very simple method of adjusting the feed is provided, operated by the hand wheel (11). By turning this hand wheel to the right the block (12) which is free to slide upon the rod (13) is forced by the screw (14) to the left or away from the operator; this lifts the arm of the bell-crank lever (9) and by drawing the plunger forward, restricts the opening (2), so cutting down the feed. If more feed is desired, the hand wheel is turned to the left and the reverse takes place. A space (15) provided with shutter cleats is left open in the front of the bin immediately over the feeder to permit of the removal of any obstruction that may interfere with the working of the feeder. The plunger makes 150 1¼-inch strokes per minute. Many other forms of push feeders are in use differing to a greater or less extent from the one shown in the cut.

Conveyors.

§ 1384. Classification. — Conveyors may be roughly divided into two classes: (1) the push or drag type, and (2) the carrying type. In the case of the push or drag type, the ore is pushed or dragged forward in a trough. In the second type, it is continuously carried forward upon a belt or in a series of pans or buckets as the case may be.

§ 1385. Push or Drag Conveyors.[17] This class of conveyors includes screw conveyors, drag or disc conveyors, and push or hoe conveyors, all of which find uses in ore-dressing operations. This type of conveyor possesses the advantage that it can be discharged at any point without recourse to complicated mechanism.

§ 1386. Screw Conveyors. — The Caldwell helicoid conveyor, manufactured by the H. W. Caldwell & Son Company,[11] is the latest development of spiral or screw conveyors. The flight is rolled, while hot, from a single strip of metal and is thus given its permanent form. For this reason the helicoid flight, even without the pipe inserted, is very strong, and the flights resist to the full strength of the metal any effort to close them or force them together.

FIG. 826*a*. — OLD STYLE HELICAL CONVEYOR FLIGHT. SECTION.

In the effort to secure greater strength, it was formerly the practice to increase the thickness of the flight. This enabled the spiral to resist the lateral pressure of the material, but it was discovered by the users of such conveyors that the wear on the edges of conveyors with thick flights was excessive in comparison with the wear on the face of the flight, and that to secure durability for the conveyors it was best to use flights with as thin an edge as possible, consistent with sufficient strength to propel the material. Therefore the helicoid flight in its cross-section has the thickest portion near the shaft, giving strength, and tapers to a thin outer edge, offering the least possible wearing surface to the material. Figs. 826*a* and *b* show a comparative drawing of the cross-sections of a 12-inch helicoid and a 12-inch old-style conveyor. It will be seen in the drawings that the helicoid conveyors use internal collars at the pipe ends, which permit the use of larger and stronger pipe.

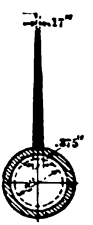

FIG. 826*b*. — HELICOID CONVEYOR FLIGHT. SECTION.

In comparing the helicoid conveyor with the older types we find the follow-

ing advantages: (1) The flight is made in one piece, obviating the necessity of rivets and joints which offer points of resistance, friction, and wear to the material. (2) The metal is rolled to its permanent shape, thereby increasing the strength of the conveyor. No strains are set up in the metal as is the case where the metal is bent to the pipe. (3) The cross-section of the flight is such as to give maximum strength and resistance to stripping, and minimum wearing surface. (4) The use of internal collars permits the use of larger and stronger pipe. (5) As the edges are very true, the conveyors can be operated at a high speed.

The capacity of a screw conveyor [17] depends upon the diameter and pitch of the screw, its speed of revolution, and the specific gravity of the material being handled. Table 534 gives the capacity which may be expected in the case of conveyors of stated sizes run at stated speeds and conveying material weighing 100 pounds to the cubic foot.

TABLE 534. — CAPACITY OF SCREW CONVEYORS.

Diameter of Screw. Inches.	Revolutions per Minute.	Capacity Tons per Hour.
5½	120	2.1
7½	110	3.55
9½	100	7.05
11½	90	12.35

For the power required, Ingalls gives the following formula: $H.\ P. = [WL \div (3 \times 33{,}000)] + F$, where W is the weight in pounds of the material to be carried per minute, L is the distance in feet to which it is to be carried, and F is the horse-power required to turn the screw itself at the specified speed.

The screw conveyor is the cheapest conveyor to install, but the wear is an extremely serious factor; repairs and renewals often amounting to 100% a year. Screw conveyors do their best work in handling finely crushed and dry ore. They are troublesome with wet or clayey ores and entirely unsuitable for coarse ore. Long screw conveyors are apt to give trouble. Short screw conveyors make good feeding devices.

§ 1387. DRAG OR DISC CONVEYORS. — In addition to the belt conveyors, the disc conveyor is finding its way into the mills and performing very satisfactory service indeed. Such conveyors are made by the C. O. Bartlett Company, H. W. Caldwell & Son Company, the Jeffrey Manufacturing Company, and others. They consist of a series of discs which are clamped to a steel cable and dragged through a cast-iron or wooden trough of V or U-shaped cross-section, or a circular channel with a flaring top. A disc conveyor in a cast-iron trough is employed at Mill 1 of the Flat River Lead Company [40] of Flat River, Missouri. The discs were formerly of chilled iron, but manganese steel has been substituted, clamped to a ⅜-inch wire rope. These discs drag lead concentrates out of a tank and up a slope which has a rise of 22 feet in a horizontal travel of 80 feet, while the water flows back down the trough. The conveyor travels 43 feet per minute, handling 50 tons of galena in 24 hours. The power required is 1¾ to 2½ horse-power. Discs and liners of chilled iron last from three to four months. The concentrates when discharged at the top of the incline carry from 4 to 5% of water. The liner for the trough is made of ¼-inch sheet steel 12 iches wide, which is bent on a radius of 3½ inches to make the trough, with the sides projecting outward at an angle of 60° with the horizontal. The steepest slope of the conveyor trough is 17°. These conveyors while more convenient in some cases and cheaper in first cost, wear out faster and are usually more expensive than belt conveyors in the long run.

The capacity of a disc or drag conveyor depends upon the width of the trough, the speed of the chain or cable, the volume of the ore, and the frequency of the discs. The disc conveyor, like the screw conveyor, gives best results when handling fine ore over moderate lengths.

§ 1388. PUSH CONVEYORS. — Figs. 827*a* and *b* show a push conveyor which is finding its way into the mills.[17] In this conveyor the ore is pushed forward in a trough by a series of hoes hinged at intervals to a reciprocating ladder-like frame, composed of a pair of channel beams joined by suitable cross-bars and mounted upon rollers. This frame is actuated by a crank mechanism, which can be placed at any convenient point. The hoes or flights are so hinged

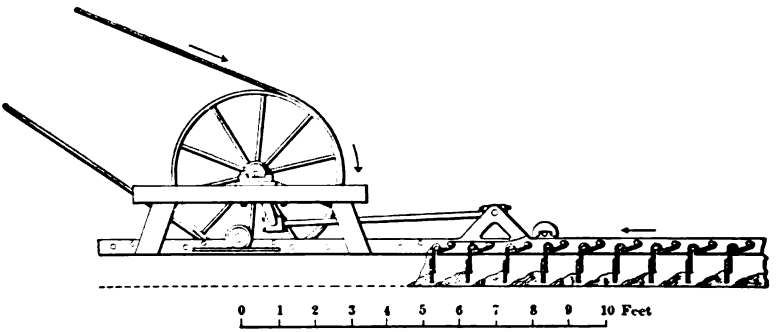

FIG. 827*a*. — PUSH CONVEYOR, FORWARD STROKE.

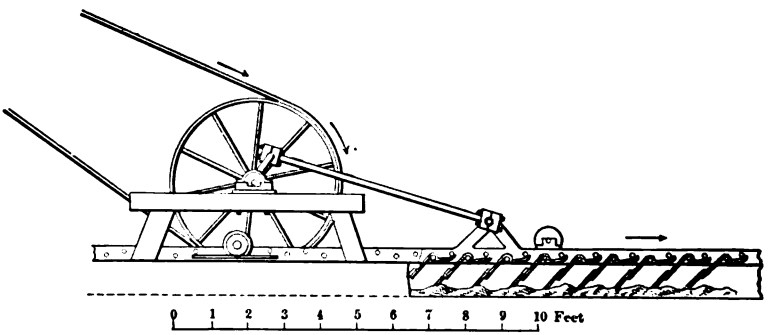

FIG. 827*b*. — PUSH CONVEYOR, BACKWARD STROKE.

that in their forward motion they bear against stops and push the material along, while in their backward motion they return to the starting point by dragging over the top of the material.

The push or reciprocating conveyor has the advantage that it can be fed and discharged at any point; it occupies less height than the chain scraper-conveyor and all its wearing parts are outside of the grit, save the flights themselves and the trough. It is uneconomical of power, owing to the frequency with which the motion is reversed, and the fact that at every stroke the inertia of the entire lot of ore has to be overcome. This latter fact limits the length of the conveyor. Push conveyors are not suited for handling coarse material, and are considerably more expensive than disc conveyors. The capacity of this form of conveyor would be determined in the same way as that of the disc conveyor.

A later form of reciprocating conveyor has a trough with bottom made in

a serrated form. This trough is reciprocated and at each jerk the material goes over a ledge, and therefore attains a positive progressive movement.

§ 1389. CARRYING CONVEYORS. — Conveyors of this type possess the advantage that when transporting material horizontally the only power expended is that employed in overcoming the frictional resistance of the moving parts.

The use of conveying belts is rapidly increasing among the mills. The Robins Conveying Belt Company [38] has installed conveying belts in a very large number of mills, among which may be mentioned Mill 152, where 152 of these belts are in use; the magnetic separating plant of Mill 158; Mill 174; and the New Kleinfontein Company, Ltd., in the Transvaal. In the latter mill the ore is carried on a 30-inch conveyor from the head gear to a trommel and grizzlies, after which four 36-inch sorting conveyors are provided for preliminary separation of waste, and from which a 24-inch conveyor takes the ore to the 200 stamps. At Mill 173, one belt carried over 1,000,000 tons of ore before being replaced. Thus the belt conveyor is making rapid inroads on the field of the bucket conveyor. In fact in many plants the entire handling of the ore and concentrates is accomplished by belt conveyors.

The methods described in Vol. II. of Ore Dressing, page 859, for supporting and driving the belt as well as for discharging the product have not been modified to any considerable extent.

Idlers with several wheels, one or more to support the belt and two to turn up its edge, are still the prevailing form. However, at Mill 167 [28] a flat belt is preferred for horizontal or slightly inclined conveyors, and the company maintains that it is more economical to purchase a wide enough belt to convey the load flat, than to attempt to increase the capacity of a narrow belt by turning up its edges, and introducing additional wearing parts by the turn-up idlers. The same company prefers flanged belts similar to the flange of vanner belts, to turned up belts where the inclination is steep (22°), and the rolling of the larger particles makes it necessary to take some precautions to prevent their getting off the belt. This flanged belt at Mill 167 [40] is 20 inches wide with a flange 1 inch high, which, being similar to that of a vanner belt, can be used with a tripper if desired. It handles 750 tons of ore per day, and is able to convey about 1,500,000 tons of material before being replaced. The first cost of such a belt is about the same as that of a Robins belt, and the simple form of idler, and consequent fewer wearing parts, makes it preferable to a troughed belt.

The cost [39] of handling materials by conveyor belts may be itemized as follows:

Horse-power per foot, per ton, if horizontal	$0.00015
" " " " " " " inclined	0.001

The cost of renewal of belts is $0.001 to $0.002 per ton for each time the ore is fed to a conveyor.

Rubber belts seem to be much in the majority, although the double-stitched canvas belt "Leviathan" has found favor in many places.

The Stephens-Adamson Company [43] manufactures conveyor belts suited for every sort of conveying problem. Fig. 828 shows a form of carrier for conveying belts known as the "S–A" Self-Oiling Carrier. These carriers are self-lubricating and will run continuously for months without attention. They are dust proof

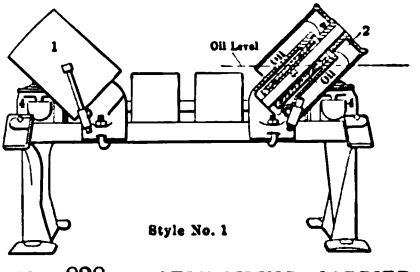

FIG. 828. — SELF-OILING CARRIER FOR CONVEYOR BELTS.

throughout. The troughing idlers (1) and (2) run in babbitted sleeves (3) submerged in oil while the oscillating bearings (4) have large reservoirs with heavy brass oil rings. This form of carrier is used for horizontal conveyors only. The Stephens-Adamson Company manufactures trippers for discharging conveyor belts, one of which is shown in Fig. 829. These devices are made for hand propulsion, also self-propelled as in the case of Fig. 829, and self-propelled and self-reversing.

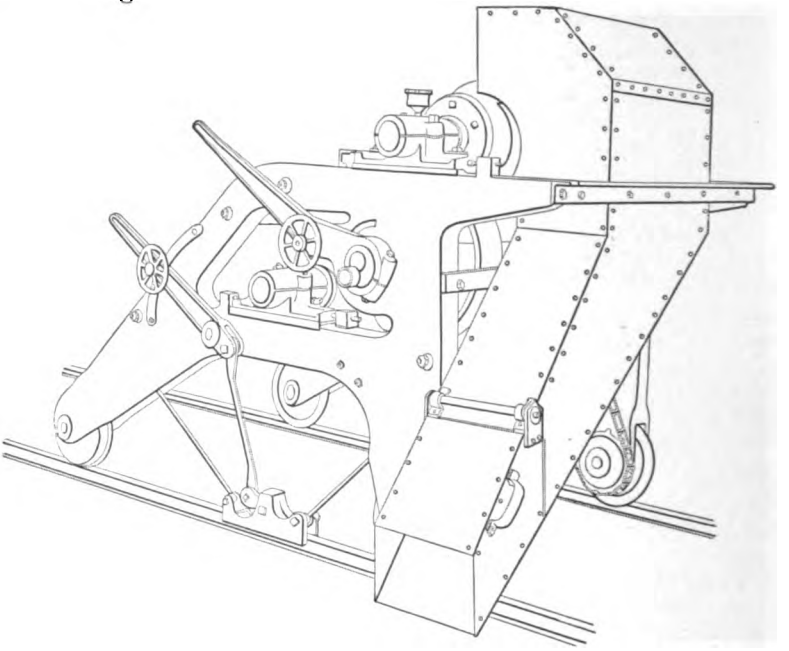

FIG. 829. — AUTOMATIC SELF-PROPELLING TRIPPER.

Elevators.

§ 1390. Sand Wheels. — For elevating slimes which also contain sharp sand, the Humboldt Engineering Works Company [24] recommends Raff wheels. These wheels, one of which is shown in Fig. 830, are made up to 65 feet in diameter, ordinarily entirely of iron with the exception of the wooden buckets A. The wheel is driven either by ropes or pulley and belt. In the figure as the wheel revolves in a counter-clockwise direction, slimes are scooped up from the sump B and discharged into the vat C above as the wheel reaches the upper point of its revolution.

In the case of these wheels, if we let [30]

R = radius in feet at the back of the buckets,
r = " " " " " " mouth of the same,
n = number of buckets,
l = length of divisions measured on incline in inches,
t = thickness of the same in inches,
B = inside width of buckets,
C = capacity in cubic feet per revolution, then

$$C = B\left(\frac{R^2 - r^2}{2} - \frac{ltn}{144}\right)$$

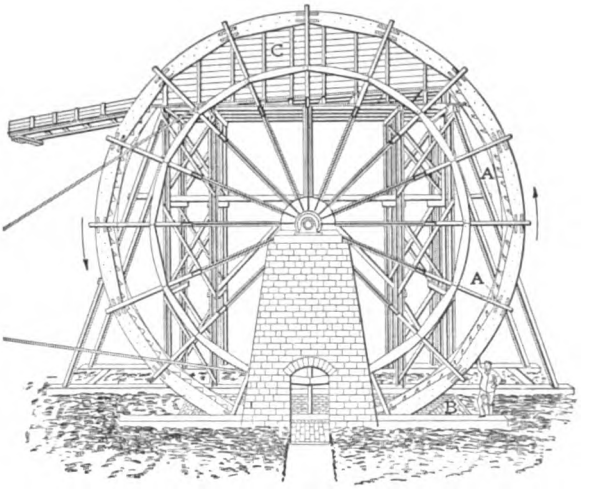

FIG. 830. — ELEVATION OF SAND WHEEL.

As regards the proper speed for these wheels it is apparent that as the speed is increased a point will be reached at which centrifugal force will prevent the buckets from discharging. This may be called the critical speed. The speed used in practice is approximately one-third of the critical speed. Table 535 will serve to show the critical as well as the practical speed of wheels of different diameters.

TABLE 535. — CRITICAL AND PRACTICAL SPEEDS FOR VARIOUS SIZES OF RAFF WHEELS.

Critical Speed.			Speed in Practice.	
Diameter of Wheel in Feet.	Revolutions per Minute.	Peripheral Velocity in Feet per Minute.	Revolutions per Minute.	Peripheral Velocity in Feet per Minute.
10	24.218	761	8.07	254
20	17.125	1076	5.71	359
30	13.983	1,318	4.66	439
40	12.110	1,522	4.04	507
50	10.820	1,701	3.61	567
60	9.887	1,863	3.29	621
70	9.154	2,013	3.05	671

Wood and Laschinger [16] made a determination of the mechanical efficiency of a 25-foot wheel as follows:

Size 19 feet, 1 inch.
Weight of pulp lifted, 5,549 pounds per minute.
Theoretical horse-power required, 3.208.
Actual horse-power delivered by motor, 6.935.
Total power efficiency, 48.51%.

The first wheel of this kind was made by Fraser & Chalmers and erected at the Consolidated Main Reef on the Rand. Since that time they have been installed at numerous other places. A large sand wheel is in use at Mill 177. This is described in Vol. II., Ore Dressing, page 865.

§ 1391. SAND PUMPS. — As regards the use of pumps for raising pulp after it has passed over vanners, R. G. Brown [34] states that at the Standard

Consolidated Mine, Bodie, California, four Frenier Sand Pumps (see Vol. II., page 871) are used for elevating pulp 63 feet for conveyance to the cyanide plant, 1,800 feet away. These pumps are arranged in series. The three lower ones are 10 / 54 inches and have a lift of 16 feet 4 inches each; while the upper one is 8 / 48 inches and has a lift of 14 feet. He states, furthermore, that the Frenier pump is most satisfactory for a regular flow and for lifts within its capacity. Centrifugal pumps require less attention and are easier to install.

§ 1392. JOHN A. TRAYLOR & COMPANY [44] manufactures a solid-lined centrifugal sand-pump. These pumps are so constructed as to be especially adapted for the handling of sands, gravel, and other gritty materials. Figs. 831*a*, *b*,

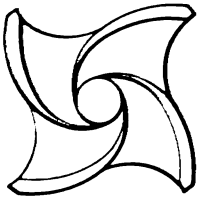

FIG. 831*a*. — RUNNER OF TRAYLOR CENTRIFUGAL SAND PUMP.

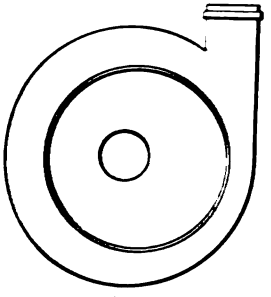

FIG. 831*b*. — LINER.

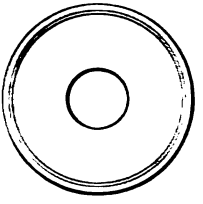

FIG. 831*c*. — FOLLOWER.

and *c* show the wearing parts. The wear on these pumps is taken up exclusively on the runner, solid liner, and follower. These parts are constructed of a special metal so hardened as to give them a life equal to that of manganese steel.

The liner is so constructed as to do away with the ill effects usually met with in the case of lined pumps, namely, the circulation of water and sands between the liner and shell or outer casing of the pump and the resultant wear upon the latter. Fig. 832 shows the casing (1) with the liner (2), follower (3), and runner (4) in place. It will be noted that the neck of the liner (2) is provided with packing rings (5) which prevent circulation of sand and water between the liner and outer casing, and cause this space to become filled with sand.

All wear is thus taken on the liner and runner, which are easily and cheaply renewed.

Details as to the capacities, speeds, etc., are given in Tables 536 and 537.

TABLE 536. — CAPACITIES OF JOHN A. TRAYLOR CENTRIFUGAL PUMPS.

Sands and Gritty Materials, Cubic Yards Solids per Hour.

Sizes.	Percent of Solids.			Horse-power Required for Each 10 Feet Elevation.	Pulley.	
	10 Percent.	15 Percent.	20 Percent.		Diameter.	Face.
2 Inch	5 cu. yds.	8 cu. yds.	12 cu. yds.	2	8 Inch	6 Inch
3 "	10 " "	15 " "	21 " "	3	12 "	8 "
4 "	14 " "	21 " "	28 " "	4	12 "	10 "
5 "	21 " "	32 " "	43 " "	6	14 "	12 "
6 "	30 " "	45 " "	60 " "	8	14 "	12 "

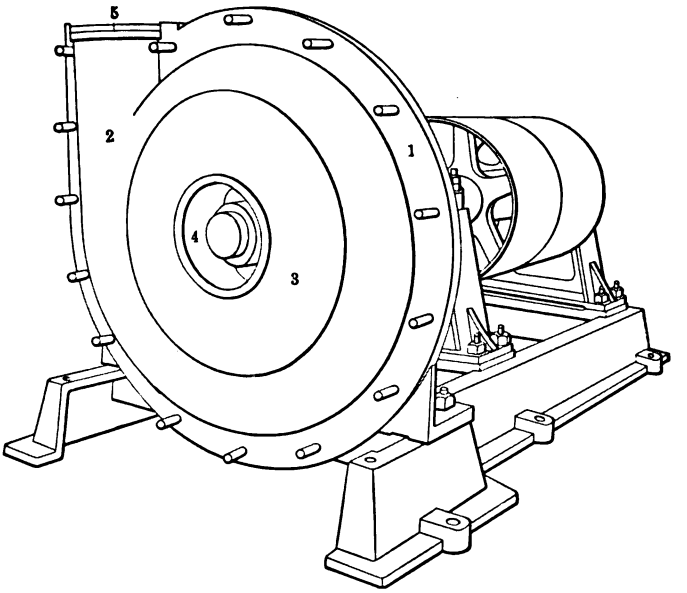

FIG. 832. — TRAYLOR CENTRIFUGAL SAND PUMP.

TABLE 537. — PROPER SPEEDS FOR TRAYLOR CENTRIFUGAL PUMPS AT SPECIFIED LIFTS.

No. of Pump.	Capacity Gals. per Minute.	Speeds at which Pumps should be Run to Lift to Different Heights.											
		Feet Lift.											
		5	10	15	20	25	30	35	40	50	60	80	100
		Revolutions per Minute.											
2	250	302	426	522	603	674	737	798	852	953	1,045	1,210	1,348
3	500	302	426	522	603	674	737	798	852	953	1,045	1,210	1,348
4	1,000	285	402	493	569	637	697	754	805	901	987	1,143	1,274
5	1,600	256	362	443	512	572	626	687	724	810	887	1,027	1,145
6	2,500	214	302	368	427	478	523	566	604	675	740	857	955

§ 1393. LANCASTER ROTARY PUMPS. — The James H. Lancaster Company [31] makes a form of rotary pump for handling sludge and gritty water. Usually the great objection to rotary pumps for this class of work is the excessive wear which soon renders the pump worthless. Fig. 833 shows a section through one of the Lancaster rotary pumps. In the section we have the suction pipe (1), through which the water enters the casing (2); next we have the rotor (3), mounted eccentrically, as shown, and the rollers (4). The pump having been primed and started, the rotation of the rotor causes the water entrained between the rotor (3), the roller (4), and the casing (2) to be continually carried around toward the discharge pipe (5), while, at the same time, the two rollers, which are farthest from the suction opening, act as valves and prevent the water in the discharge pipe from forcing its way back into the pump. The pumps are run at a low speed, are automatic in action and extremely simple in construction. The tubes (4) automatically seat and take up their own wear. This does away with the great objection to rotary pumps for handling sludge. When the tubes are finally worn out they can be replaced for about $1 per set.

§ 1394. DISPLACEMENT PUMPS. — The Latta & Martin Pump Company,[32]

manufactures pumps for handling water either clear or gritty, and using compressed air. In operation these so-called displacement pumps are very simple. Two cylindrical chambers are connected at the top by an automatic air-valve mechanism and at the bottom by suitable piping and check valves. Air pressure entering at the top is delivered alternately to the respective chambers, discharging the water contained therein through the check valves and discharge pipe. As a chamber is emptied of water, the remaining air is exhausted through a port in the upper valve-gear, while water simultaneously replaces it through the foot valves below. This simple operation is repeated alternately

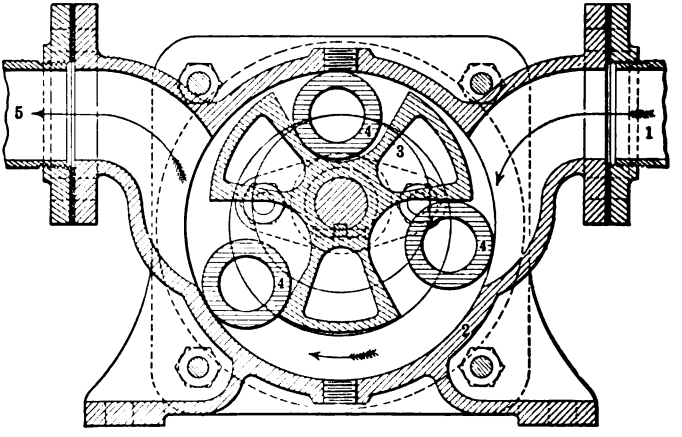

FIG. 833. — LANCASTER ROTARY PUMP. SECTION.

upon each side of the pump, and, as stated above, is entirely automatic, requiring no attention whatever. These pumps may be placed at any point of water supply, in a dug well or river, and may be operated and controlled by the engineer, even though situated several miles from the source of power.

The obvious advantages of this system rest in its simplicity. There are no pistons to cut out or wear out, no packing to replace, no lubrication, and little attendance. Pumps of this kind have been furnished up to a capacity of 10,000 gallons per minute in single units. The average fuel cost of pumping has been one cent per 1,000 gallons. One of these pumps is in use at Mill 144.

Dewatering Wheels.

§ 1395. Fleming Dewatering Wheel. — At the Silver King mill,[18] and at Mill 131, a dewatering wheel invented by J. D. Fleming is used and is giving perfect satisfaction.[42] A pulley wheel 18 inches in diameter, and 6-inch face, is drilled to receive 12 vanes or paddles which are bolted to it, staggered, as shown in Figs. 834*a* and *b*, making the diameter of the final wheel 42 inches. The vanes are bent on a 12-inch radius with their tip ends on a line drawn at an angle of 45° with the radius drawn through the point of attachment of the vane to the wheel. The result is a number of shovel-shaped paddles which are made to lift concentrates or jig tailings, to be dewatered, out of a tank and deliver them unwatered at a slight elevation above the level of the water in the tank. The wheel is revolved at the rate of 9 to 12 revolutions per minute in the direction indicated, *i.e.*, so that the dewatered material is lifted by the convex side of the paddle. The tank is 50 inches long by 36 inches wide, inside measurements, and 30 inches deep. The shaft carrying the wheel is mounted

on the top of the box, 22 inches from one end. The inlet launder is at one end of the tank, and as the wheel revolves it lifts whatever has settled on the bottom of the tank and discharges its product into an outlet trough which

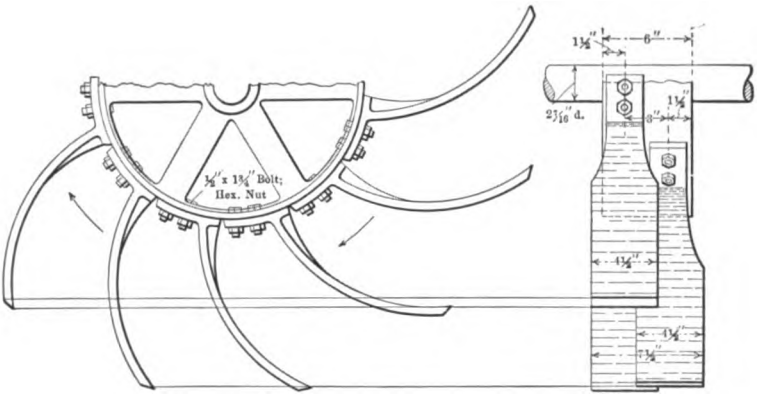

FIG. 834*a*. — FLEMING DEWATERING WHEEL. FIG. 834*b*. — FRONT VIEW.

slopes at an angle of 45°. The wheel is housed on its discharge side to prevent spilling of material.

§ 1396. Fig. 835 shows a device used at Mill 141[33] for dewatering jig tailings.

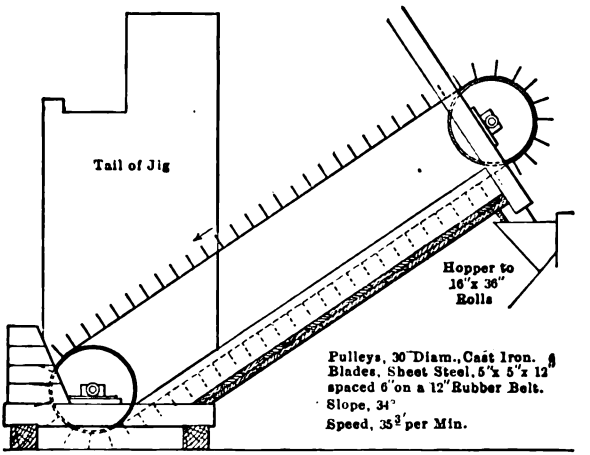
Tail of Jig
Hopper to 16"x 36" Rolls
Pulleys, 30" Diam., Cast Iron.
Blades, Sheet Steel, 5"x 5"x 12"
spaced 6" on a 12" Rubber Belt.
Slope, 34°
Speed, 35 per Min.

FIG. 835. — DEWATERING WHEEL AT MILL 141.

DEWATERING SCREENS.

§ 1397. ROGERS' DEWATERING SCREEN. — The dewatering screen,[40] shown in Figs. 836*a* and *b*, is used to treat material above 2 millimeters in size, and requires no attention while discharging the material with as little water as if filtered. As shown in the side elevation, the ore and water fall together on an inclined 14-mesh screen (1) which quickly makes a bank of ore of a slope corresponding to its angle of repose. In Fig. 836*b* it will be noted that the screen instead of presenting a smooth surface has a warped surface. This serves to retain a bed through which the water can percolate, thus diminish-

ing the wear of the screen, and also assisting in dewatering by preventing blinding of the screen due to ore particles being caught in the meshes while passing over. The ore rolls down the incline and is discharged, while the water goes through the bank of ore and the screen into the spitzkasten below. This screen is in use at Mill 144.

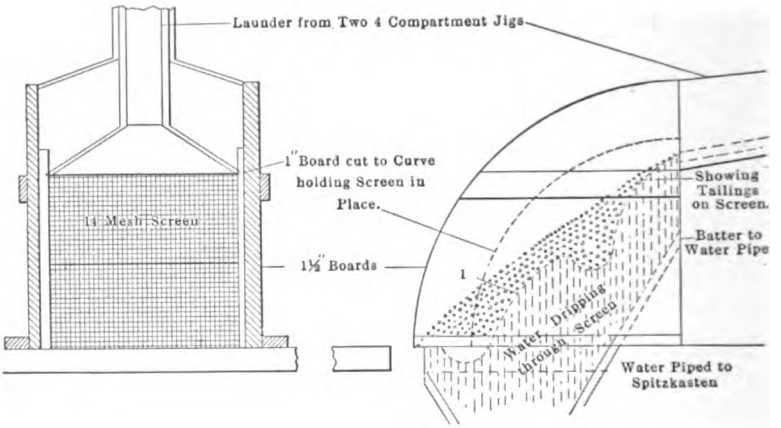
Launder from Two 4 Compartment Jigs
1" Board cut to Curve holding Screen in Place.
14 Mesh Screen
1½" Boards
Showing Tailings on Screen.
Batter to Water Pipe
Dripping
Water through Screen
Water Piped to Spitzkasten

FIG. 836*a*. — ROGERS' DEWATERING SCREEN. END ELEVATION.

FIG. 836*b*. — SIDE ELEVATION.

LAUNDERS.

§ 1398. G. A. Overstrom [35] has performed many experiments for the purpose of studying the laws governing the carrying capacity of launders for sands in water. His results are interesting in that they bear no apparent relation to hydraulic laws. Launders of various widths from 2 to 10 inches were taken, material fed in from the feed box and the time consumed in conveying the materials the length of the launder noted by means of a stop watch.

At this point it was discovered that the time required to remove the sand was independent of the rate of feeding unless the launder was allowed to nearly clear itself. Also by using launders of different widths it was proved that "the material carried per minute per pound of water on the same grade using the same pounds of water per inch of width would be the same no matter what size launder was used," or the carrying capacity of a launder is independent of the "wetted perimeter" as far as the solids go.

A 2.5-inch launder was adopted for the final experiments. Several hundred experiments were made on all grades, using different materials as regards fineness, using quartz, galena, pyrite, etc., and mixtures of these.

Among these some results are shown in Fig. 837, obtained with quartz 40 to 150 mesh. This shows, as all the other series of experiments show, that deep water is required on low grades, and shallower water on steep grades for the most economical use of water. Thus for any slope, it is easy to find the flow of water which will convey the maximum amount of sand per pound of water, per inch width of launder; also the least grade on which a certain material can be transported with a given quantity of water; or what is the least water that can be used to transport a given quantity of material on a given grade and width of launder.

For example: How much water will it take to transport 25 tons per 24 hours, or 35 pounds per minute, of 40 to 150-mesh tailings (silica), on a ¼-inch

to 1-foot grade, and how wide should the launder be? If we look at Fig. 837 we find at the bottom horizontal dimensions marked *slope in inches per foot;* if we follow up the vertical through the point marked 0.25 until we come to

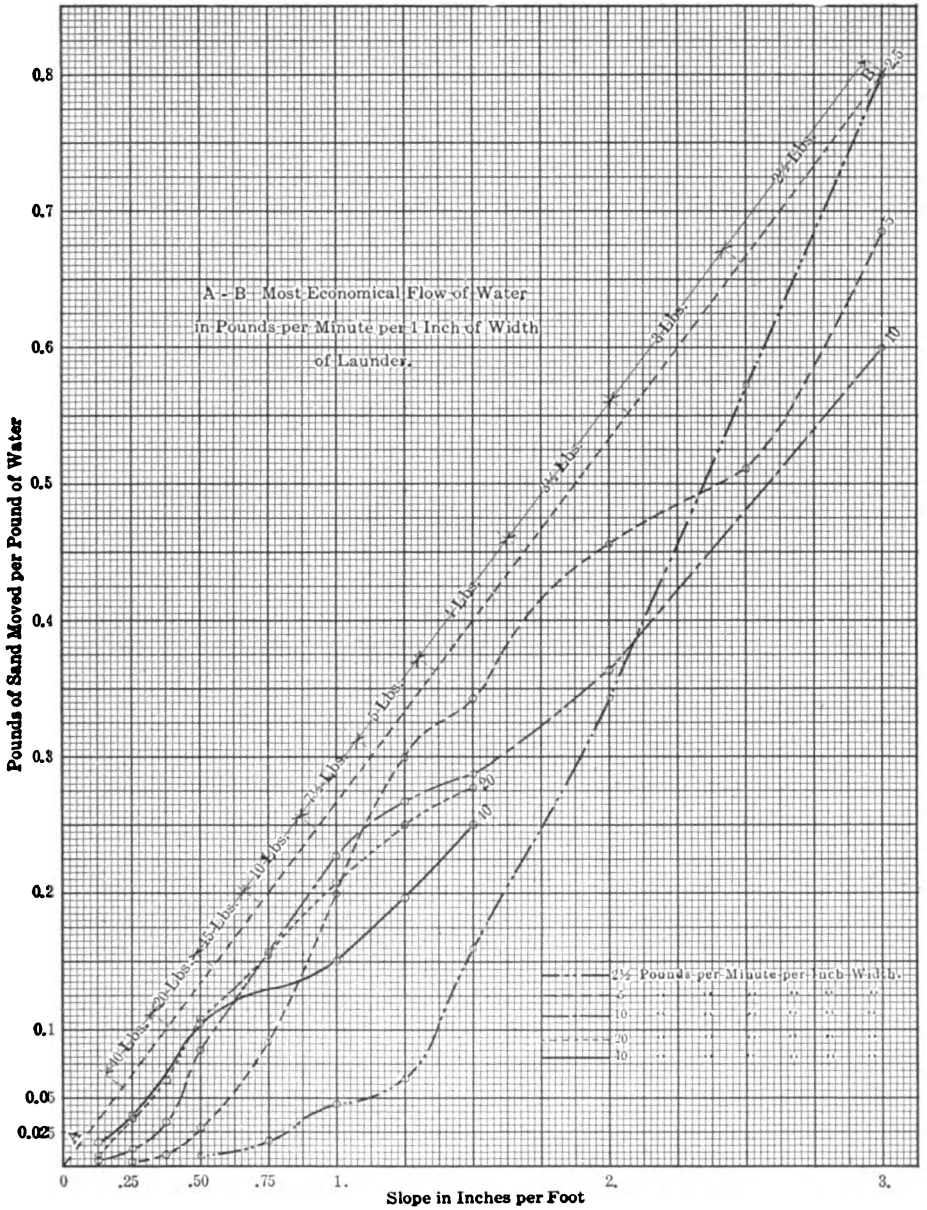

FIG. 837. — OVERSTROM'S LAUNDER DIAGRAM.

the line *A B*, we shall find that 40 pounds of water per inch of width is the most economical flow. Now if we pass to the plotted curve marked 40, and follow it until it intersects the vertical through 0.25, we shall see that 1 pound

of water will transport 0.0375 pound material, or 40 pounds will transport 1.5 pounds sand per inch of width of launder per minute. Therefore the launder should be about 23.5 inches wide. This launder then requires 23.5 times 40, making 940 pounds of water per minute. This is the least amount of water that would transport the sand as specified.

§ 1399. BLUE'S EXPERIMENTS. — A very interesting series of experiments on the flow of sand and water in a launder has been recently conducted by F. K. Blue.[22] The purpose of these experiments was primarily to determine the conditions as to grade and velocity under which the sand in a mixture of sand and water would fall to the bottom of the launder and fill it up, so that the material would run over; information of this nature being desirable in designing a large stamp mill covering considerable area and located on nearly flat ground. It was also desired to know what effect the sand in suspension has on the coefficient of fluid friction of water running in a launder.

An experimental launder was so constructed that the slope could be varied and the quantities of water and pulp, as well as the velocities, measured at will. With this apparatus Mr. Blue obtained a series of results from which he has been able to derive several formulæ which should be of value to any one called upon to design a mill.

These formulæ for sand and water are as follows:

$$S = 0.186\sqrt{g}$$
$$V = 8.15\ \sqrt{g}$$

when S = slope of launder percent.
g = ratio of the volume of wet sand, or sand and slime, to the total volume of the mixture flowing in the launder;
and V = average velocity in feet per second.

By adding a little slime to the mixture of sand and water, enough so that the ratio of sand to slime was 9 to 1, Blue found that a very marked reduction in the frictional resistances occurred in the launder. This means, of course, increased velocity with an increase in the relative amount of slimes contained in the pulp.

For sand, slime, and water, Mr. Blue gives the formula

$$S = 0.0910\sqrt{g}$$

Suppose it is desired to find the grade of a launder that will carry 25% of sand by volume and a little slime, and hold it in suspension in the water while flowing. If we substitute in the formula $S = 0.0910\sqrt{g}$, we get $S = 0.0910\sqrt{0.25} = 0.045$. Hence a grade of about 5% or $\frac{5}{8}$ inch to the foot would be just about sufficient to keep the pulp in suspension, hence it would be reasonably safe to lay this launder on a grade of $\frac{3}{4}$ inch to the foot, with a few feet at say $1\frac{1}{4}$ inches to the foot at the start. The launder should be designed much deeper than required so as to take care of any irregularities and banking up which might occur during a temporary reduction in the amount of water.

If there were no slime in the mixture, the velocity necessary to carry this would be $V = 8.15\sqrt{0.25} = 4$ feet per second. Since the above mixture contains slime the required velocity will be a little less.

It should be added that of the sand used in these experiments 77% passes a 40-mesh screen and rests on 80 mesh. For further details the reader must be referred to Blue's article.

To show that Blue's formula does hold in practice the following example may suffice. At the Standard Mine, Bodie, California, a launder 4 inches wide.

and 9 inches deep, set on a grade of $\frac{7}{16}$ inch to the foot, carries pulp containing 17 to 19% solids and flows freely. A grade of $\frac{5}{16}$ inch was found insufficient in cold weather. As it is evident from the character of the mill that the product carries slimes, we will apply the formula $S = 0.0910\sqrt{g}$; considering that the pulp carries 18% solids, we have $S = 0.0910\sqrt{0.18}$, which gives $S = 3.82\%$, or about $\frac{7}{16}$ inch to the foot. This agrees perfectly with what is being done in practice.

If one has given the slope of the launder and the amount of material which is to be transported, the method of computation suggested by Overstrom furnishes the required width and water quantities. If, on the other hand, the proper slope for a launder, carrying a known mixture of sand and water, is required, Blue's formula gives results which are safe to use in practice.

§ 1400. LAUNDER LININGS. — In recent years plate glass has come into use for launder linings. At Mill 173, scrap plate glass is used for this purpose; that is, pieces left over from cutting up large sheets. Plate-glass linings are said to be cheaper than chilled iron because of their superior wearing qualities. The first cost is greater. Glass for this purpose may be obtained from Theodore W. Morris and Company, 440 Canal Street, New York City.[40] The cost is approximately 19 cents per square foot of $\frac{1}{2}$ to $\frac{5}{8}$-inch thickness.

§ 1401. PIPE LAUNDERS. — At Guanajuato, Mexico,[21] tailings are successfully conveyed in pipes. The system is 5,440 feet long. It is laid for the first 800 feet on a grade of 3.5%, after which it has a uniform grade of 2.25%. The pipe is 8-inch cast-iron bell and spigot pipe $\frac{5}{8}$ inch thick, and the joints are calked with hemp rope. The pipe has many curves, most of which are on a 14-foot radius. The pipe was put in commission about the middle of March, 1906, and at the end of 13-months' service the inside showed no appreciable wear. A blow-hole is situated about 1,000 feet from the head, which gives notice of any deposit of coarse sand by a whistling sound and allows the consistency of pulp to be changed. The pulp passes through the pipe in about 12 minutes. At the head of the system two dewatering cones are placed which reduce the consistency of the pulp from 8 to 1, to 4 or 5 to 1. The pipe runs about half full and handles the tailings from 160 stamps. Sizing tests on the material conveyed give the results shown in Table 538.

TABLE 538. — SCREEN SIZING TEST OF MATERIAL CONVEYED BY PIPE LAUNDERS GUANAJUATO, MEXICO.

	Pulp When Using Tube Mills.	Straight Battery Pulp.
Mesh.	Percent.	Percent.
On 40	3.1	5.1
" 50	4.4	5.2
" 60	2.8	5.2
" 80	4.1	5.7
" 100	4.3	5.6
" 120	10.0	11.8
" 150	3.1	1.7
Through 150	68.2	59.7

It should be noted that in the case of a pipe, if the velocity of the water, due to grade, is not sufficient to retain the material in suspension, riffle banks form. Thus the size of the opening is reduced to a point where the velocity is sufficiently increased by hydrostatic head until the material is carried off.

DRIERS.

§ 1402. CLASSIFICATION. — Three distinct types of driers are in use in the mills: (1) drying floors, (2) cylindrical driers, and (3) tower driers.

§ 1403. DRYING FLOORS.[36] — The simplest form of drier consists of a series of iron plates placed over a flue so that they can be heated from below by the hot gases passing through the flue. This form of drier may be so arranged as to utilize the waste heat from other operations. If the plates are horizontal, hand labor is required for spreading and moving the ore. If the plates are inclined, the dry ore may be made to slide off into a conveyor at the side. This form of drier is the least efficient of all the various forms of driers. Under most favorable conditions and even with moderate stirring, it has not been found possible to dry more than 0.3 cubic foot of ore per hour per square foot of area; whereas with a well-designed mechanical drier, 0.4 cubic foot is obtainable.

§ 1404. CYLINDRICAL DRIERS.[36] — Two general types of cylindrical driers are in use: (1) direct heat driers and (2) direct heat and direct contact driers. In the first type the ore does not come into direct contact with the heated gases from the furnace, in the latter it does. The first type includes cylindrical driers heated from without in which the ore is caused to travel through the conveyor by means of an endless screw. This is an adaptation of the screw conveyor discussed in a previous article.

§ 1405. *The Grill Four-Compartment Direct Heat Drier.*[5] — This drier is a cylinder sloping 1 inch in 12 inches, and divided into four compartments or segmental portions with flue spaces all around the cylinder and between the segments (see Fig. 838). By this means the external heating surface is doubled and nearly four times as much surface is created over which to spread the material while drying. The material fed, as it enters the drier, is equally divided into four parts so that the ore is thinly spread over a large surface.

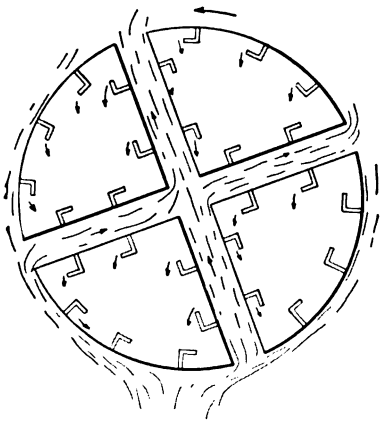

FIG. 838. — DIAGRAMMATIC SKETCH OF GRILL FOUR-COMPARTMENT DRIER.

As the material slowly passes through the drier, it is elevated by the angle irons and cascaded through the air space to increase greatly the surface exposed to the drying influence.[6] These angle irons are not fastened rigidly to the shell but are so arranged as to give ample allowance for expansion. The products of combustion, after going the length of the cylinder outside it, return by an outside flue when they would harm the material being dried. But when this is not the case, they return in the cylinder, economizing heat still further. In either case the current of air or gases passes through the compartments of the cylinder in the opposite direction from the material being dried, in order to take up the water, and is so moved by a suction fan. Where the material is very light and dusty a dust chamber will be needed. The cylinder is supported on anti-friction rollers and driven by gear and pinion.

It is made in nine sizes ranging from 48 inches diameter and 28 feet long, requiring 5½ horse-power and drying 100 tons of quartz in 24 hours, to 60 inches diameter and 48 feet long, requiring 12 horse-power and drying 200 tons of quartz sand in 24 hours.

The Empire Portland Cement Company, users of one of the Grill rotary driers, have furnished the data shown in Table 539 as to its performance in their plant.

TABLE 539. — TEST ON GRILL ROTARY DRIER AT PLANT OF THE EMPIRE PORTLAND CEMENT COMPANY.

Coal dried per 24 hours	100 tons.
Percent of moisture before drying	5 percent about.
" " " after "	1.25 percent.
Size of material fed to drier	¾ inch to slack.
Amount of coal (fuel) required per 24 hours	1½ tons.
Coal burned as fuel	Slack.
Percent ash in fuel	12 percent about.
Horse-power required	3½ to 4 horse-power.
Revolutions per minute	8.
Time material remains in drier	15 to 20 minutes.
Attendance required	1 man.

These driers are manufactured by the C. O. Bartlett and Snow Company. In addition to the four-compartment driers the Bartlett-Snow Company make driers of other types more especially designed for some particular class of drying.

§ 1406. *The J. R. Alsing Company*[2] makes a double drier (see Figs. 839*a*, *b*, and *c*). The material to be dried is charged into one end of the inner tube and is conveyed by helical blades, as the cylinder rotates, to the other end; thence it is discharged into the outer cylinder, lifted by longitudinal blades on the inside of this cylinder, dropped onto the outside of the inner cylinder, which is provided with helical blades similar to those on the inside of the same cylinder, and so gradually re-conveyed to the same end from which it was fed, being lifted each time it falls, and is again showered on the top of the inner tube. An exhaust fan removes the moist air as rapidly as necessary, the quantity of air being completely under the control of the operator, who can permit the air to approach the point of saturation as close as may be desirable for economic results. With the arrangement the material is subject to intimate contact with the heated air, is under perfect control, and the moisture is removed as rapidly as possible, while the material travels twice the length of the cylinder, and is in contact with the heated air double the time it would be in an ordinary rotary drier.

The J. R. Alsing Company makes a double drier in which the furnace gases do not come in direct contact with the material to be dried, the principle being otherwise the same. They make no statements as to sizes, etc., but state that they find it more satisfactory to construct a drier especially designed to suit each particular case, modifying the numerous types of driers made by them in such a way as to accomplish this result.

§ 1407. *The American Process Company*, of New York,[3] manufactures driers which find an extended use wherever such machines are required. As may be seen by looking at the cut (Figs. 840*a*, *b*, and *c*), the American Process direct-heat drier is of the direct-heat and direct-contact type. It consists essentially of a cylindrical steel shell, provided on the interior with longitudinal shelves. Near each end of the shell is a steel tire which rests upon chilled friction-roller wheels rotated by gearing or chain belting, and in turn imparting rotation to the shell. The drier as a whole is set upon a gentle slope determined and fixed by experience.

The wet material and the furnace gases enter at the higher end. The wet material falls to the bottom of the drier, is caught by a shelf, elevated to almost the highest point of the rotation, and is then showered through the furnace gases. This cycle of operations is repeated until the material, in a dried condition, is discharged from the lower end of the drier. Thus the material and furnace gases travel in the same direction with the highest temperature in contact with the wettest material.

This drier [4] is made in sizes which will easily evaporate 1,000, 1,500, 2,500, and 4,000 pounds of water per hour, respectively, from average material. Any fuel — liquid, gaseous, or solid, may be used.

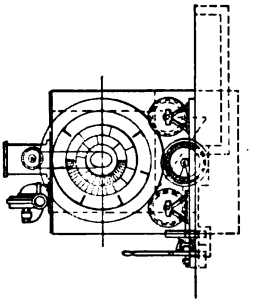

FIG. 839c. — CROSS-SECTION.

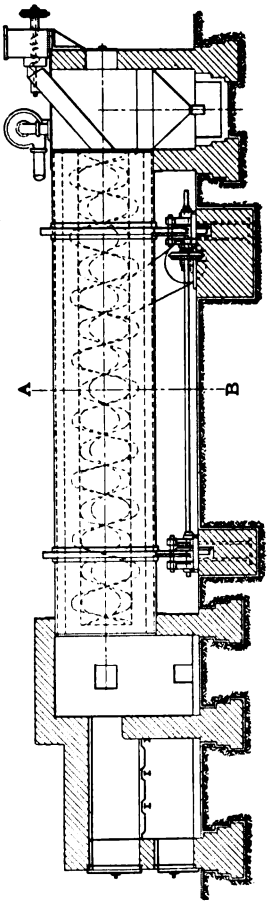

FIG. 839a. — SECTION OF ALSING IMPROVED DRIER.

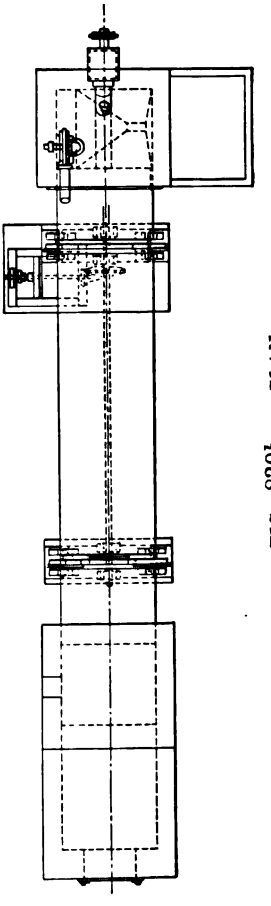

FIG. 839b. — PLAN.

With regard to the cost of drying, the American Process Company states that it is very difficult to give an average figure. They, however, say that starting with the assumption that you are handling 10,000 pounds of wet ore

per hour, and basing moisture on 10% going to the drier, it would mean 1,000 pounds of water per hour to be evaporated, which would require approximately 150 pounds of coal. The American Process Company says that under favorable conditions it is possible to evaporate 10 pounds of water with 1 pound of coal. On this basis, for turning out 45 tons per 10 hours dry ore, about 1,500 pounds of coal must be consumed. About 10 horse-power would be required to operate the drier. One man only would be required to operate, as the ore should be delivered to and carried away from the drier by conveyors.

Assuming the value of coal at $1.50 per ton, man to operate drier at $2, power 75 cents, the cost becomes 9 cents per ton.

A recent test of one of the American Process Company's driers used in drying phosphate pebble showed an evaporation of 9.15 pounds of water with 1 pound of coal. This test was made by Peter S. Gilchrist, of Charlotte, North Carolina, consulting engineer for the Florida Phosphate Mining Corporation, and details are shown in Table 540.

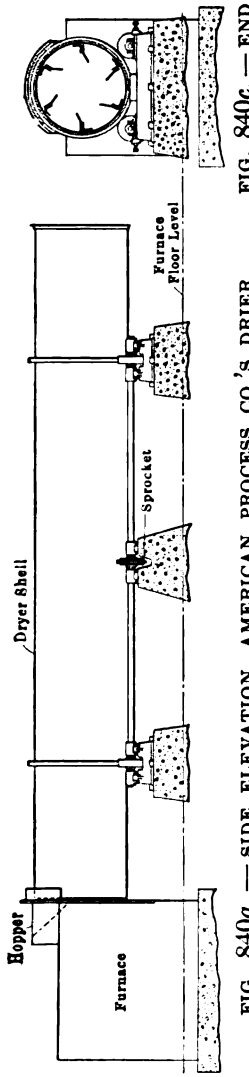

FIG. 840a. — SIDE ELEVATION, AMERICAN PROCESS CO.'S DRIER.

FIG. 840c. — END ELEVATION.

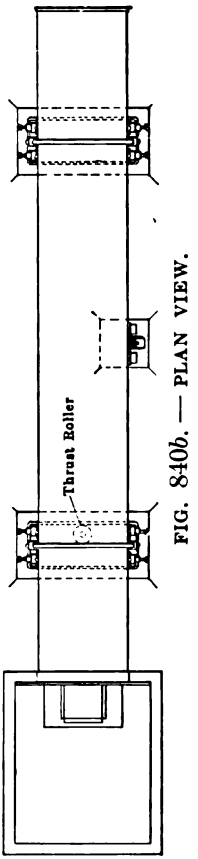

FIG. 840b. — PLAN VIEW.

§ 1408. *Argall Drier.*[27] — In addition to the facts stated in Vol. II., Ore Dressing, page 880, concerning the Argall drier, the following supplementary facts should be noted. The Argall drier, as will be remembered, differs from the ordinary cylindrical drier in being made up of a nest of from four to six comparatively small brick-lined cylinders rather than one large cylinder; this nest of cylinders is fastened inside of two heavy track bands supported and driven by two pairs of rollers.

TABLE 540. — TEST OF DRIER AT FLORIDA PHOSPHATE MINING CORPORATION'S PLANT.

Duration of Test	5 hours.
Amount of pebble fed to drier	50,834 pounds.
Amount of moisture in feed	14.97 percent
Amount of moisture in dried product	0.53 percent.
Weight of dried product	43,454 pounds.
Amount of water evaporated	7,380 pounds.
Water evaporated per pound of coal	9.15 pounds.

The fire-box is made of steel plate, and conveys the flame and heated gases

directly into the hood at the discharge end of the machine, while the dried ore is continually dropped out of the discharge openings in this hood as the drier revolves; all iron work is removed from the heat, is fully exposed to the air, and accessible at all points for inspection. In this drier the ores are divided into four or more thin streams and subjected to the influence of the hot gases brought in close contact with the ore which passes in an opposite direction from the gases from the fireplace the better to utilize the heat of these gases. The ore in each tube also takes a wedge shape, being, say, only 1 inch thick at the discharge end of the tubes, and 8 to 10 inches thick at the feed end.

Any good feeder can send the ore regularly to the feed end, or it can be spouted direct from a feeder-supplied elevator.

These driers are made in two sizes, No. 1 having a capacity of 80 to 100 tons per day; No. 2, 150 to 200 tons per day. If 6 tubes are used add 50% to the above capacities. Phillip Argall favors the 4-tube drier.

The following results are reported from the Bessie mill, Telluride, Colorado, where they use a No. 2 4-tube drier of the Argall type. The moisture was reduced from 8.06 to 1.22 % in 88.5 tons of ore in 12 hours, using 1.33 tons of coal costing $1 per ton at the mine. This coal was a poor quality of slack, but a Jones underfeed stoker was used. The ore was of a very clayey nature, containing about 65% silica, alumina with iron, magnesia, etc.

The ores Argall used at the Metallic works were siliceous Cripple Creek ores, averaging 4% moisture, of which 3% was driven off in his 4-cylinder drier. At this plant 1 pound of good coal evaporated 9 pounds of water. The average cost of drying is about 5 cents a ton.

§ 1409. TOWER DRIERS.[36] — The Edison drying kiln, which is an example of this type of drier, has been fully described in Vol. II., Ore Dressing, page 881. At Franklin Furnace, New Jersey, an Edison tower, 3 × 3 feet × 24 feet high, dries ore 1½ inches and less in size, containing from 4 to 6% moisture, at the rate of 500 tons per 24 hours. The product from this drier contains 1% of moisture and the coal consumption is 0.12 ton per hour. Driers are in use as large as 8 × 8 × 50 feet high.

CYANIDE MACHINERY.

§ 1410. THE BLAISDELL SYSTEM OF MECHANICAL ORE HANDLING.[7] — The Blaisdell Company have perfected a method for cyaniding sands and slimes mechanically. The wet pulp coming to the cyanide plant is discharged into a hopper suitably suspended over the sand-collecting vats. This hopper is free to revolve about a vertical axis and is provided with radial pipes having discharge spouts directed backward so that it rotates in the same manner as the reaction turbine. The radial pipes vary in length and thus bring about an even distribution of the pulp in the vats. The water and slimes contained in the pulp are discharged through suitable gates at the sides of the vat leaving the sands. The central discharge opening is kept closed by a plug shown in Fig. 841, until the tank is filled, drained, and is ready to be excavated. The distributor is either supported on a swinging crane serving four vats, or is mounted on a bridge spanning a series of vats over which it travels. When the collecting vat has been filled with sand and drained, the plug is removed and the excavator brought into play.

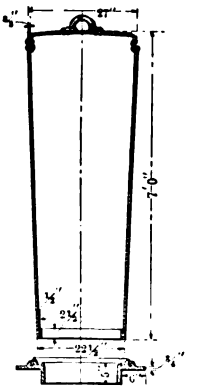

FIG. 841. — BLAISDELL TANK PLUG.

The excavator consists of a double-truss steel bridge (see Figs. 842*a*, *b*, and *c*)

supporting at its center a vertical steel shaft with four horizontal arms. The bridge is carried by wheels traveling on steel rails placed on either side of the vats and supported by independent structures. The central vertical members of the bridge truss carry cross-head guides and screws for raising and lowering the cross-head. The latter carries the upper bearing of the main shaft and a thrust bearing running in oil supporting the weight of this shaft, excavator

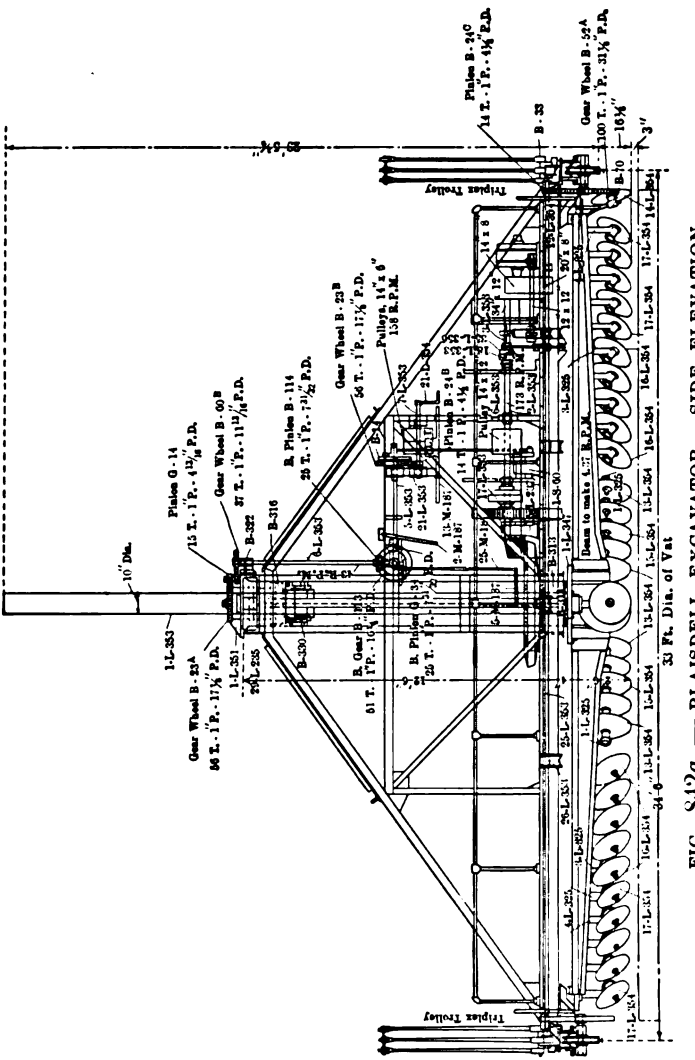

FIG. 842a. — BLAISDELL EXCAVATOR. SIDE ELEVATION.

beams, and discs. The bridge floor carries a bearing in which rests a beveled gear splined to the main shaft. This revolves the main shaft. Upon the arms are mounted discs which move the sand, when the shaft is revolved, toward the center of the vat. This attachment is useful for aerating the sands when it is desirable to do so. When the sand is being removed from the sand-collecting vat, these discs move it toward the center where it falls through the central

discharge opening upon one of a series of belt conveyors which delivers it to a centrifugal sand distributor. This is a rapidly revolving, horizontal disc, fed by a revolving hopper which is placed in the center of a leaching vat and supported by a movable steel bridge. The sand is thrown outwardly by centrifugal force and distributed lightly and evenly in the vat. A motor-driven steel transfer table is used for shifting the excavator or distributor where there are two or more rows of vats. The ore having been leached, the excavator is removed to the leaching vat, the direction of motion of the conveying belts is reversed, and the sands are sent to the tailing pile where, as they are dumped by the tripper at the end of the belt, they are thrown a considerable distance farther by rapidly revolving bucket drums. The purpose of the latter appliance is to avoid the construction of a high supporting trestle. By forward discharge of the tailings tacker, the dump is

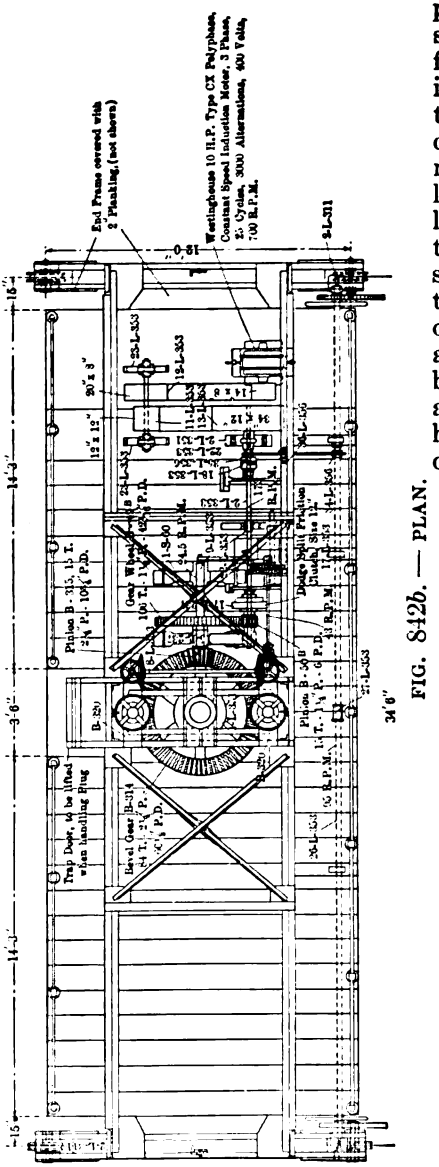

FIG. 842b. — PLAN.

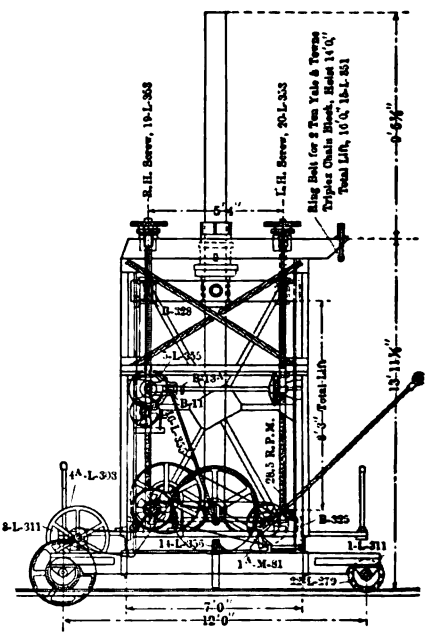

FIG. 842c. — END ELEVATION.

built in advance of the conveyor, enabling the subsequent extension of the latter upon it. The Robins belt conveyor is employed in this system.

For the treatment of slimes, a slime agitator (see Fig. 843) is used which is similar to the excavator but has long sweeps which stir the slime in the vat and maintain a pulp current which is outward from the center and upward at the sides of the vat. Compressed air is discharged into the solution mean-

while through perforated pipes in the sweeps or arms, thus aerating the solution. The compressed air for this purpose is furnished by a pump on the agitator bridge driven by a motor also on the bridge. Power to operate all the various appliances of this system is taken from two trolley wires running along the row of vats. The Blaisdell Company also manufacture a mechanical mixer for moistening with cyanide solution dry-crushed ore from stamps or rolls. The material is delivered into a hopper at the top of the machine, usually by a belt conveyor. A vertical hollow shaft carries two sets of four horizontal arms each, upon which are mounted discs as in the excavator. As the dry ore comes into the mixer, it is sprinkled with the cyanide solution and then falls upon the platform upon which the upper set of discs operates, and the latter

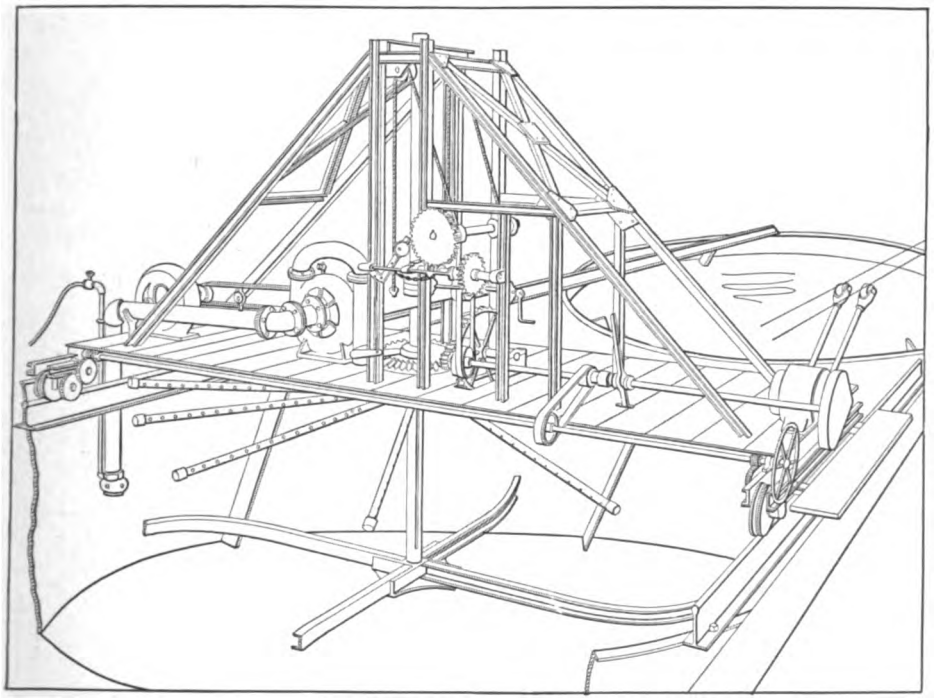

FIG. 843. — BLAISDELL SLIME AGITATOR.

turn it slowly toward the edge where it falls over to the lower set of discs which again stirs and aerates the ore as it is rolled to the center of the lower platform and discharged to a belt conveyor which carries it to the leaching vats. This system eliminates the labor question as far as it can be eliminated, for very few men are required to operate it. The excavator, distributor, agitator, etc., all run automatically, being set to go as far at each operation as is desirable. The cost of handling ore in this way is given by the Blaisdell Company as 2 cents gold per ton, including the charges for repairs.

Weighing Devices.

§ 1411. Blake-Denison Continuous Weighers.[8] — The principle upon which the Blake-Denison continuous weigher is constructed is that of suspending a short section of the conveyor and weighing the material as it passes

over this suspension. If a 6-foot section of the conveyor is suspended, the machine is designed to record the weight of the material on the suspension every time the conveyor travels 6 feet, and in this manner the material on every portion of the conveyor is weighed successively.

Fig. 844 represents the weighing mechanism. The steelyard (1) is balanced to suit the unloaded suspension and arranged to rise accurately in proportion to any load introduced upon it. A gripping device (2) is provided which at intervals, governed by the speed of the conveyor, grips the steelyard in the

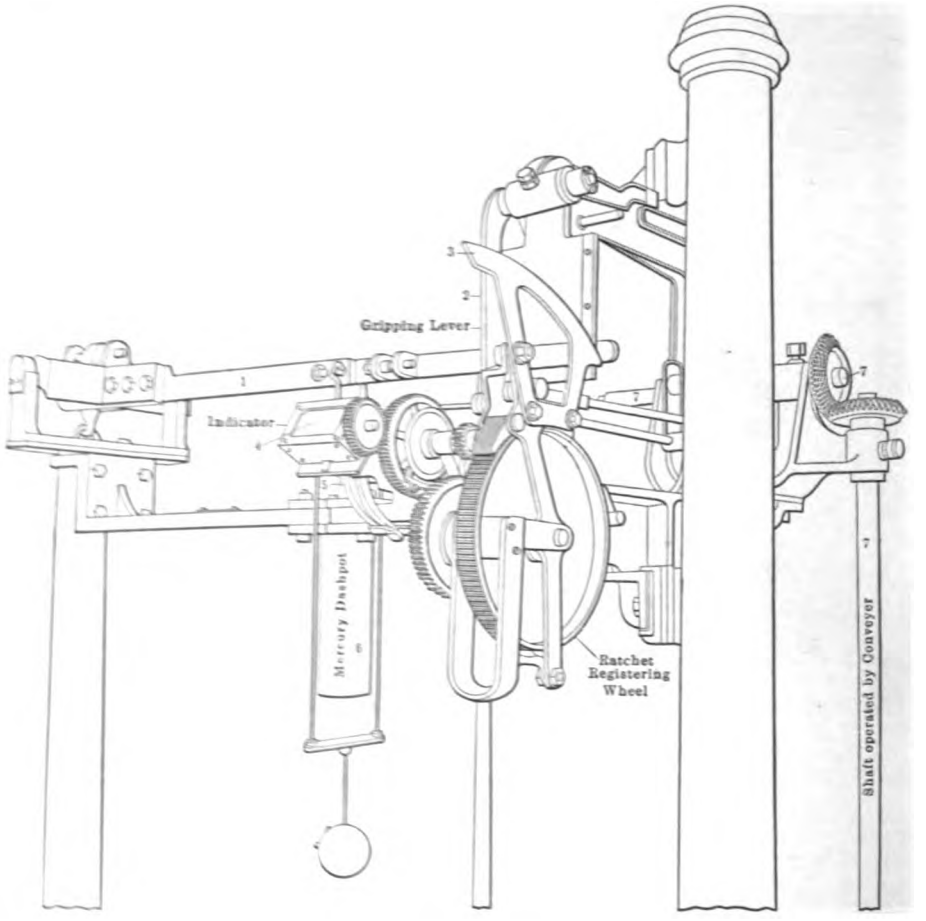

FIG. 844. — WEIGHING AND RECORDING MECHANISM OF BLAKE-DENISON WEIGHER.

position it has assumed. The measuring quadrant (3) gauges the weight indicated by the steelyard when so held, and the recording mechanism (4) registers the results.

The resistance of the steelyard to the load is provided by a hollow plunger (5), suspended in a bath of mercury in such a way that it forms a dash pot (6), preventing oscillation and insuring the steelyard being always in a position indicative of the load. The gripping and measuring actions are effected by two cams upon a shaft (7) operated by gears from a drum which is revolved by the conveyor itself.

This machine seems to have many advantages over the former hopper-style weighing machines. There is no hopper to become choked and no cut-off valves. The material to be weighed does not touch any part of the weigher, thus reducing the wear to a minimum, and avoiding the possibility of interference with the operation of the conveyor. There is no jar nor shock to dull the knife edge, the vital part of any scale. There is no auxiliary power needed and the machine is said to be accurate to within one-half of 1%. Material of any size or consistency can be handled and at any speed.

§ 1412. LIBRA SCALES. — The Libra patent automatic scales, manufactured by the F. H. Schule Company,[41] are used extensively in the flouring mills of this country and Europe, principally for weighing grain, etc., but are equally adaptable to weighing ores of comparative fineness, cement, etc. These scales are entirely automatic in every respect and give very accurate results.

Figs. 845*a* and *b* show the working parts in detail. The balance is an

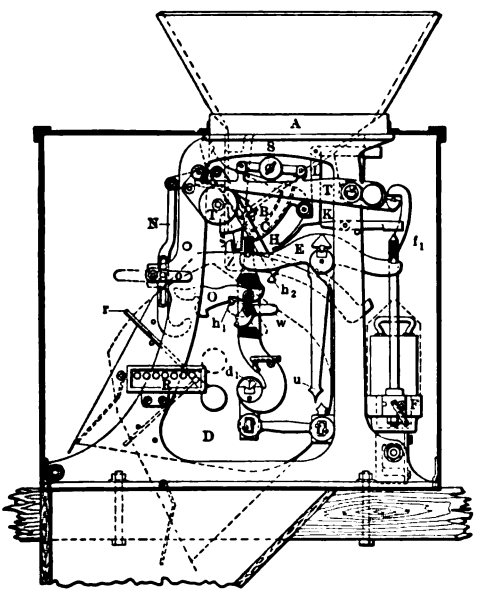

FIG. 845*a*. — LIBRA SCALES. SIDE VIEW.

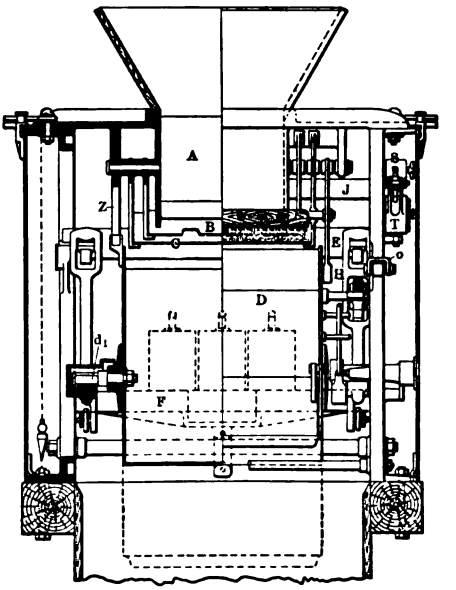

FIG. 845*b*. — END VIEW.

equal arm beam E, from one end of which is hung the weight platform F holding ordinary weights, while from the other end is suspended the hopper D for the material to be weighed. The hopper is capable of rotating about the bearing d_1, and has a receiving and discharging aperture. Above the hopper is a chute A, equipped with two gates B and C, which control the flow of feed. These gates are opened by the tripper H which is operated by the nose h_2. Gate C, once open, is held in place by the hook L which is released by the lever K, actuated in turn by the pin f_1, fastened to the end of the balance arm. The levers J and T and weight S constitute a compensating device which compensates for the "stream in the air," when the gate is closed. By the same action which closes the gate C the bar N is raised, which lifts the hook O, releasing the hopper. All the points of suspension are special tempered-steel knife edges, which make the balance very delicate.

The operation of the scales is as follows: The hopper, which we will suppose has just discharged a load, is so balanced that, after discharging, it immediately

rights itself and the nose h_2 catches the tripper H and opens both gates B and C. Simultaneously with this operation the bar N is lowered, and the thumb h_1 catches in the hook O, fastening the hopper securely in place. The material pours through the open gates until the hopper is nearly full, when the slight lowering of the hopper releases the tripper H and closes gate B. This narrows down the feed to a thin stream, which continues to flow until the hopper balances the weights and the swinging of the beam E causes the pin j_1 to strike the lever K, releasing gate C and shutting off the feed. At the same time the bar N is raised, striking the hook O and releasing the hopper, which turns over gently and discharges. Each discharge of the hopper is automatically registered by the lever r attached to the register R. An automatic stop, not shown, is supplied which serves to stop the operation of the scale after any desired number of discharges.

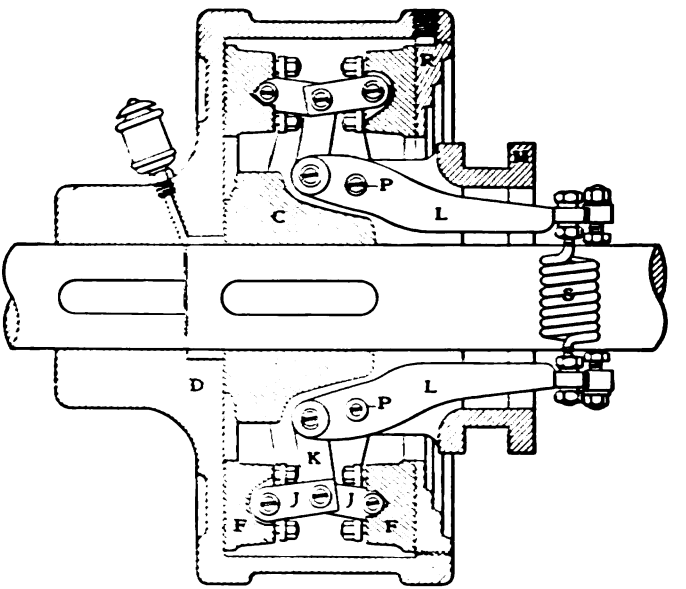

FIG. 846. — CALDWELL FRICTION CLUTCH.

To adjust the empty scales, the handle o is turned to the left, throwing the bar N away from the hook O. The lever w is pushed downward which allows the hopper to turn slightly forward, resulting in the arm Z freeing itself. Then lift levers T and J a little. The scale is now disconnected from its working parts and the pointer u should indicate a true balance.

In order that the weights of the single discharge may correspond exactly with the weight on the other side of the scale, the hopper is allowed to fill itself, and after the inlet has been opened the lever o is turned to the left as before. This prevents the discharge from taking place. Levers T and J are now raised and the scale will swing free. If the weight in the hopper is correct the pointer u will indicate a true balance. If this is not the case, the difference is regulated by moving the weight S on the lever T; to the right, if the contents of the hopper is too light, and to the left if the reverse is true. The scales should be tested once a week.

Friction Clutches.

§ 1413. The H. W. Caldwell and Son Company [11] makes a very simple and efficient friction clutch which is shown in Fig. 846. In the cut it will be noted

that the clutch is thrown out. To throw the clutch in, the cone *M* is pushed to the left by means of a lever provided with a collar which runs in the channel of the cone *M*. This tends to straighten out the toggles *J J*, and so press the toggle blocks *F F* against the inner sides of the case *D* and cover *R*, thus causing the shaft keyed to *D* to revolve with the shaft attached to *C*, since *C* revolves with the friction blocks *F F*. It will be noted that the clutch is oil-tight, which serves to keep all dust out and also to prevent oil from being thrown out due to centrifugal force. The springs *S* serve to oppose the pressure and at the same time maintain it, so assuring an even and constant pressure on the double-friction surface.

This clutch has been picked out for the purpose of illustrating a class of devices that is finding a more and more extended use in the mills. By means of friction clutches the power, whether it be one horse-power or one thousand, can be almost instantly thrown off a machine or series of machines without stopping to shift a belt. Friction clutches are also manufactured by the C. O. Bartlett and Snow Company, the Jeffrey Manufacturing Company, and all large manufacturers of machinery.

Removal of Wood.

§ 1414. At Mill 164[19] it was found that an ordinary mine wedge, 8 inches long by 4 inches wide by 2 inches thick at the large end, when caught in the 9 by 15-inch breakers, would take as long to work through as a ton of ore and sometimes would clog the crusher completely, burning the driving belt and even melting the babbitt in the bearings.

The scheme here outlined was formulated by the foreman to get rid of the wood and has been applied very successfully, 40 tons of wood being recovered from each 20,000 tons of ore. In Figs. 847*a*, *b*, and *c*, *A* is the ore chute bringing

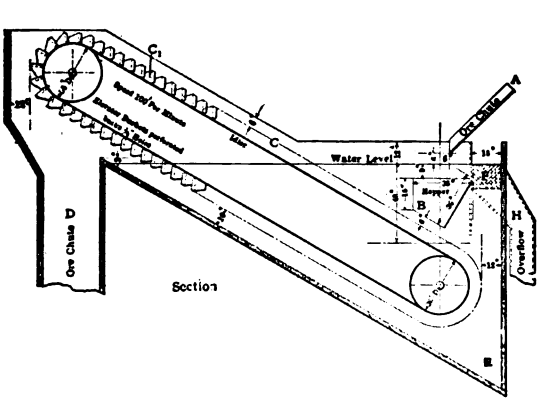

FIG. 847*a*. — SEPARATOR FOR REMOVING WOOD. SECTION.

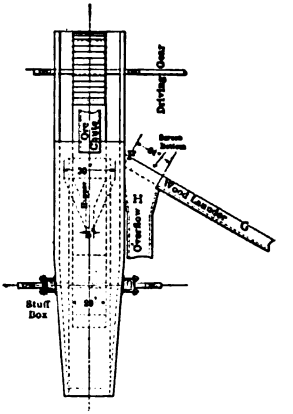

FIG. 847*c*. — END ELEVATION.

the ore and wood together into the tank; *B* is a hopper under water. The ore passes out to conveyor *C* and is conveyed to ore chute *D*. The tank *E* is kept full of water. When ore and wood are discharged into *B* below the water level the wood floats to the top of the water. The elevator buckets have perforated backs allowing the water to rush through and back into the tank. This rush of water carries the floating wood to the screen *F*, which removes the water while the wood itself passes down the launder *G*. The water passes through

the screen *F* in the bottom of the launder *G* and so down the overflow pipe *H*. This appliance has increased the capacity of the crushing plant 15%.

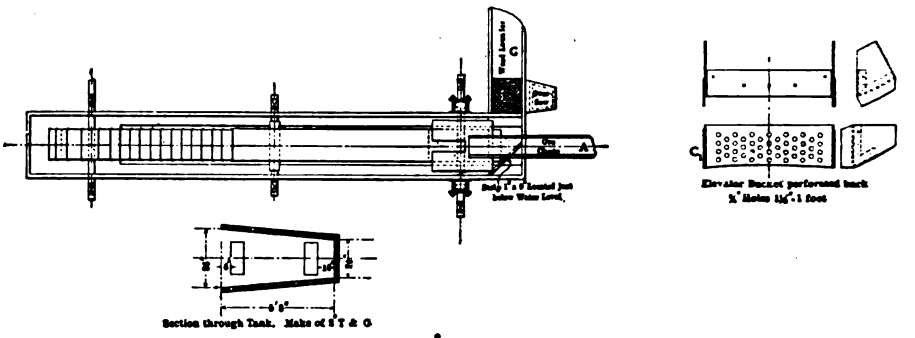

FIG. 847*b*. — PLAN.

HOISTS.

§ 1415. PILLING AIR HOIST.[37] — This is a geared hoist (see Figs. 848*a* and *b*). Suspended from a hook overhead is a frame carrying a winding drum driven by compressed air through gears operated by two cylinders at 90° which are connected to the same crank pin. The device is very compact. It is capable

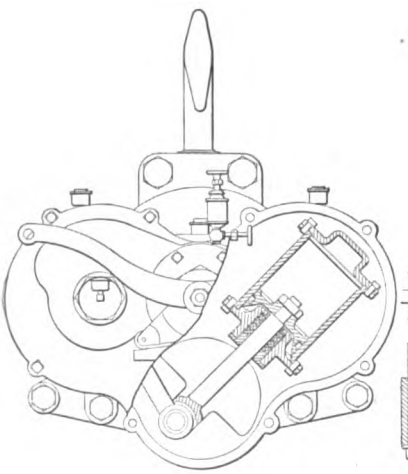

FIG. 848*b*. — CROSS-SECTION.

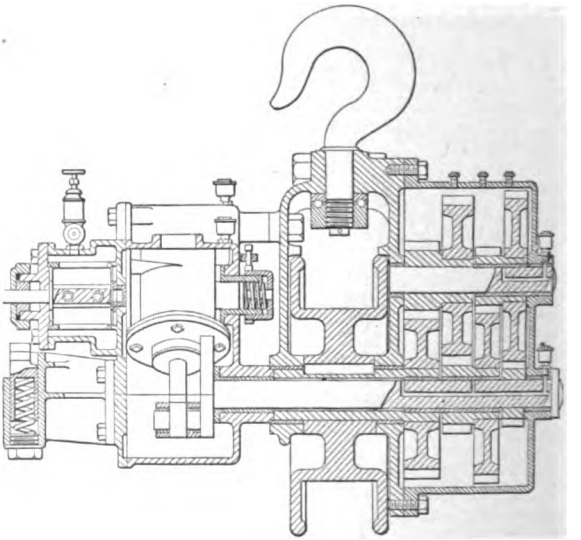

FIG. 848*a*. — LONGITUDINAL SECTION OF PILLING AIR HOIST.

of holding its lifted load with the air hose attached, so that the latter may be trammed from place to place carrying the load. The valves which control the engine are regulated by chains which hang to the floor. Table 541 gives details concerning this device.

TABLE 541. — SIZES, CAPACITIES, SPEED, ETC., FOR PILLING AIR HOIST.

Tons Capacity.	Height of Lift. Feet.	Speed of Lift. Feet per Minute.	Inches. Shortest. Distance Between Hooks.	Weight Pounds.
½	1	40	30	200
2	10	16	38	235
5	12	10	50	720
10	12	6	58	1,000

The capacities and rates of speed here given are rated on 80 pounds per square inch air pressure. Stationary compressed air engines are supplied also for use on cranes, winches, etc.

BIBLIOGRAPHY OF ACCESSORY APPARATUS.

1. Allis-Chalmers & Company, Milwaukee, Wisconsin. Catalogue describing Lamb automatic tailings sampler.
2. Alsing, J. R. Company, Brooklyn, New York. Catalogue describing driers.
3. American Process Company, New York City, New York. Catalogue describing A. P. C. driers.
4. *Ibid.* Private communication with reference to the A. P. C. driers.
5. Bartlett, The C. O. Bartlett & Snow Company, Cleveland, Ohio. Catalogue describing ore driers.
6. *Ibid.* Private communication with reference to the Grill four-compartment direct-heat drier.
7. Blaisdell Company, The, Los Angeles, California. Catalogues G and F describing the Blaisdell system of mechanical ore handling.
8. Blake-Denison Weigher Company, New York City, New York. Description of the Blake-Denison continuous weigher.
9. Brown, Walter S., Denver, Colorado. Private communication with regard to riffle cabinet in use at the Sweeny mill of Federal Mining and Smelting Company.
10. Brunton, D. W., Denver, Colorado. Private communication with regard to principles of sampling.
11. Caldwell, H. W. & Son, Chicago, Illinois. Catalogue No. 28. Description of double-disc friction clutch, also screw conveyors, etc.
12. Colorado Iron Works Company, Denver, Colorado. Ore Feeder Bulletin No. I. Catalogues Nos. 10 A, 7 E, and 6 B, all referring to the "Perfect Ore Feeder."
13. Cox, William J., Ouray, Colorado. Private communication with regard to the Camp Bird mill.
14. Dillon Iron Works, Denver, Colorado. Bulletin F-100, describing "The Perfection Ore Feeder."
15. *Ibid.* Private communication giving detailed description of the "Perfection Ore Feeder."
16. *Eng. & Min. Jour.*, Vol. LXXVII., (1904), p. 481-2. Wood & Laschinger. Mechanical efficiency of the tailings wheel.
17. *Ibid.*, pp. 640, 681. W. R. Ingalls. Conveyors. Push or drag conveyors, rotary conveyors, scraper conveyors, reciprocating conveyors, carrying conveyors, etc.
18. *Ibid.*, Vol. LXXXII., (1906), p. 248. Description of the Fleming dewatering wheel.
19. *Ibid.*, p. 742. A. H. Wethey. Description of an apparatus for the removal of wood.
20. *Ibid.*, Vol. LXXXIII., (1907), p. 232. Walter S. Brown. Description of a sampling cabinet.
21. *Ibid.*, p. 651. C. W. Van Law. Description of pipe launders in use at Guanajuato, Mexico.
22. *Ibid.*, Vol. LXXXIV., (1907), p. 536. F. K. Blue. Mathematical analysis and account of experiments relating to the flow of sand and water in launders.
23. Hendrie & Bolthoff Manufacturing & Supply Company, Denver, Colorado. Private communication and blue-print of feeder in use at Mill 113.
24. Humboldt Engineering Works Company, Kalk, near Cologne, Germany. Catalogue describing Raff wheels.
25. Ingalls, Walter R., New York City, New York. Private communication with reference to filter bins.
26. *Inst. Min. & Met.*, Vol. X., (1901-2), p. 235. P. Argall. Ideas on sampling of ores.
27. *Ibid.*, p. 242. P. Argall. Driers and drying of ores.
28. Jackling, D. C., Salt Lake City, Utah. Private communication.
29. Jeffrey Manufacturing Company, Columbus, Ohio. Private communication with reference to conveyors.

30. Julian & Smart. "Cyaniding Gold and Silver Ores," (1907), p. 355. Data with regard to tailings wheels.
31. Lancaster, James H. Company, New York City, New York. Private communication with regard to Lancaster rotary pumps.
32. Latta & Martin, Hickory, North Carolina. Catalogue describing Latta & Martin displacement pumps.
33. Livingstone, A. R., Canon City, Colorado. Information with regard to the Empire Zinc Company.
34. *Min. & Sci. Press*, Vol. XCIII., (1906), p. 261. R. G. Brown. Use of centrifugal and Frenier pumps for pulp handling.
35. Overstrom, G. A., Salt Lake City, Utah. Private communication with reference to launders.
36. *Pacific Coast Miner*, Vol. VIII., (1903), p. 35. W. R. Ingalls. Ore drying.
37. Pilling Air Engine Company, Detroit, Michigan. Catalogue of pneumatic geared hoists.
38. Robins Conveying Belt Company, Passaic, New Jersey. Bulletin No. 16. Robins Conveying machinery applied to ore.
39. *Ibid.* Private communication giving information with regard to conveyor belts.
40. Rogers, Allen H., New York City, New York. Private communication.
41. Schule, F. H., New York City, New York. Private communication describing the Libra scales.
42. Sherman, F. W., Park City, Utah. Private communication describing Fleming dewatering wheel.
43. Stephens-Adamson Company, New York City, New York. Private communication, also pamphlets relating to conveyors.
44. Traylor, John A. & Company, Denver, Colorado. Catalogue describing Traylor centrifugal pumps.